OPERATOR MANUAL

SDS85

Super Duty Ride-on Industrial Scrubber

1800 100 150
sales@conquesteg.com
conquesteg.com

CONQUEST
With you, all the way

INTRODUCTION

This manual is furnished with each new machine. This manual will allow the Operator to get the best performance out of your RPS manufactured Scrubber-Drier, Sweeper, Burnisher, or Orbital Scrubber. Read this manual thoroughly before operating or servicing the machine.

This machine will provide excellent performance, but the best results will be obtained at the most minimum costs if:

- The machine is regularly maintained - per the Authorized Local Distributor.
- The machine is operated with reasonable care and caution.
- The machine is maintained with manufacturer supplied parts.

LOCATE SERIAL NUMBER

The serial number of your machine is located on the lower half of the steering column of the machine.

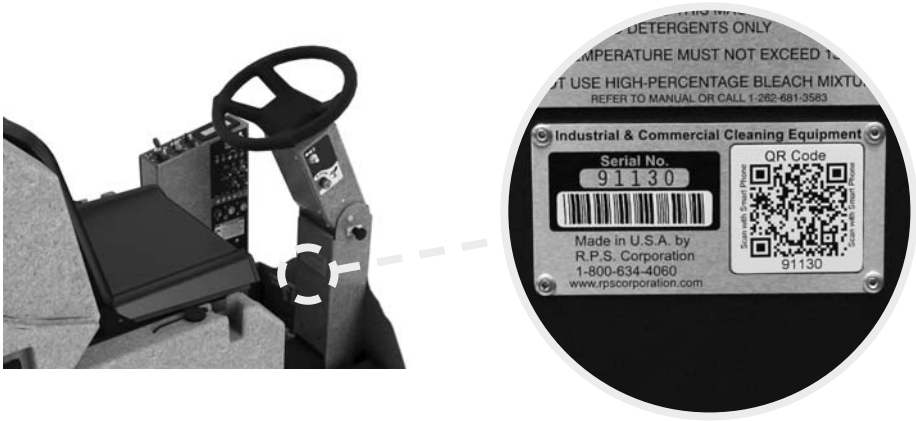

AS OUR POLICY IS ONE OF CONSTANT IMPROVEMENT - ALL INFORMATION AND SPECIFICATIONS ARE SUBJECT TO CHANGE WITHOUT NOTICE.

TABLE OF CONTENTS

Introduction 2

Locate Serial Number 2

Table Of Contents 3

Safety Messages 4

Safety Labels 6

LCD Screen 7

Operation Controls 8

Operation Controls 9

Operation Controls 10

Service Cabinet 11

Spray Jet Controls (Optional) 12

Suds Controls (Optional) 13

ZerO3 Controls (Optional) 14

Manager Lock Outs (Optional) 15

Headlights & Work-lights (Optional) 16

Side Broom System (Optional) 17

RPM Mode Switch (Optional) 18

Battery Setup 19

Remove Squeegee 20

Adjust Squeegee 21

Transportation - Forward 22

Transportation - Reverse 23

Fill Solution Tank 24

Operation - Scrubbing 25

Draining Recovery Tank 26

Draining Solution Tank 27

Flushing Recovery Tank 28

Clean Drain Saver 29

Clean Cylindrical Hopper 30

Clean Vac Box System 31

Remove Disk Brushes 32

Remove Cylindrical Brushes 33

Parking Brake 34

Battery Chargers 35

Common Wear Parts 36

- **Round Disk Brushes:** 36
- **Round Disk Pads:** 36
- **Cylindrical Brushes:** 36

P&G Controller Common Error Codes 38

You will see four kinds of safety reminders in this manual:

⚠DANGER DANGER indicates a hazardous situation which, if not avoided, will result in death or serious injury.	**⚠WARNING** WARNING indicates a potentially hazardous situation which, if not avoided, could result in death or serious injury.
⚠CAUTION CAUTION indicates a potentially hazardous situation which, if not avoided, could result in minor or moderate injury or damage to this machine or nearby objects. CAUTION also can be used to alert against unsafe practices.	**NOTICE** NOTICE indicates information considered important, but not hazard-related. This safety message may be related to property damage or warranty warnings.

Your safety, and that of others, is very important. Operating this machine safely is an important responsibility.

DO NOT OPERATE THIS MACHINE:

- Unless you are trained and authorized to do so by your RPS Authorized Local Distributor
- Unless you have read and understood this Operator's Manual
- On surfaces with greater than an 2% / 3.49° grade
- On Loading Docks

WHEN OPERATING THIS MACHINE:

- Remove loose objects from the floor that could be projected from the rotating Brushes
- Keep your hands and feet away from the rotating Brushes
- Do not operate this machine where flammable liquids, vapors, or dust are present
- Use caution when maneuvering
- Wear PPE

BEFORE LEAVING THE MACHINE:

- Drain "clean" Solution & "dirty" Recovery solution into APPROVED drains
- Park the machine on a level surface
- Turn the machine off & remove key

BEFORE SERVICING THE MACHINE:

- Disconnect the Batteries
- Wear PPE

⚠DANGER

Explosive hydrogen gas forms when Batteries are charging. An open flame or spark can cause this gas to explode. Serious personal injury or property damage could occur. Only charge the Batteries in this machine in a well ventilated area.

⚠DANGER

Flammable materials can cause an explosion or fire. Do not use flammable materials in Tank or pick up.

⚠ WARNING

The Batteries in this machine produce hazardous voltage which can cause electrical shock, burns and/ or electrocution. Always disconnect Batteries before servicing this machine.

⚠ WARNING

When climbing or descending ramps, always drive machine forward. To avoid overturning the machine, Do not back down ramps. Do not drive across inclines. Do not turn while ascending or descending ramps. Overturning the machine can cause serious injury or death.

⚠ WARNING

Do not use water that exceeds 130°F / 54°C. If water is above said temperature, this will void the Tank Warranty.

⚠ WARNING

Do not park this machine on ramps or slopes. Always park this machine on a level, hard surface. Do not operate this machine outdoors or on uneven surfaces.

⚠ WARNING

The Batteries in this machine contain sulfuric acid, which causes burns to skin. If battery acid contacts clothing or skin, rinse the effected area with cold water immediately. If battery acid gets on your face or in your eyes, flush the area immediately with cold water and seek medical attention.

⚠ WARNING

To avoid electrical shock, do not operate this machine over electrical floor outlets.

⚠ CAUTION

To avoid damage to this machine, use only cleaning solutions and replacement parts recommended by the manufacturer.

⚠ CAUTION

Do not operate this machine if any parts have been damaged or removed.

⚠ WARNING

Dress safely. Do not wear rings or metal wrist watches when servicing this machine, as they can cause an electrical short circuit which can cause serious burns.

⚠ WARNING

Do not remove, paint over or destroy warning decals. If warning decals become damaged, call 1-262-681-3583 for free replacements.

⚠ WARNING

Dress safely. Do not wear a neck tie, scarf, or any loose or dangling clothing while operating this machine. Loose or dangling clothing or neck-wear can tangle in rotating parts, causing serious injury or death.

⚠ WARNING

Always turn off this machine before leaving it unattended. Do not allow untrained persons to operate this machine.

⚠ WARNING

NO RIDERS. Do not carry passengers on this machine. Do not use this machine as a stepladder or work platform.

⚠ WARNING

Understand the dynamic braking system before you operate the machine on ramps. Machine may coast.

⚠ WARNING

Before you service a Battery, always wear face protection, protective gloves and protective clothing. Battery acid or battery explosion can cause serious injuries.

⚠ CAUTION

Always use the automatic battery charger provided by the manufacturer of this machine to charge the Batteries of this machine. It is designed to charge the Batteries at the appropriate rate. If you must use a different charger, disconnect the Batteries before charging to avoid damage to the electronic speed controller.

⚠ CAUTION

To avoid damage to the electronic control components of this machine, Do not store this machine outdoors. Do not pressure wash this machine.

Read and obey all Safety Labels on your equipment. If you have questions about these labels, ask your supervisor.

These images indicate where on the Safety Labels are located. If ever the labels become illegible, worn off, or torn, promptly report it to your supervisor and replace it.

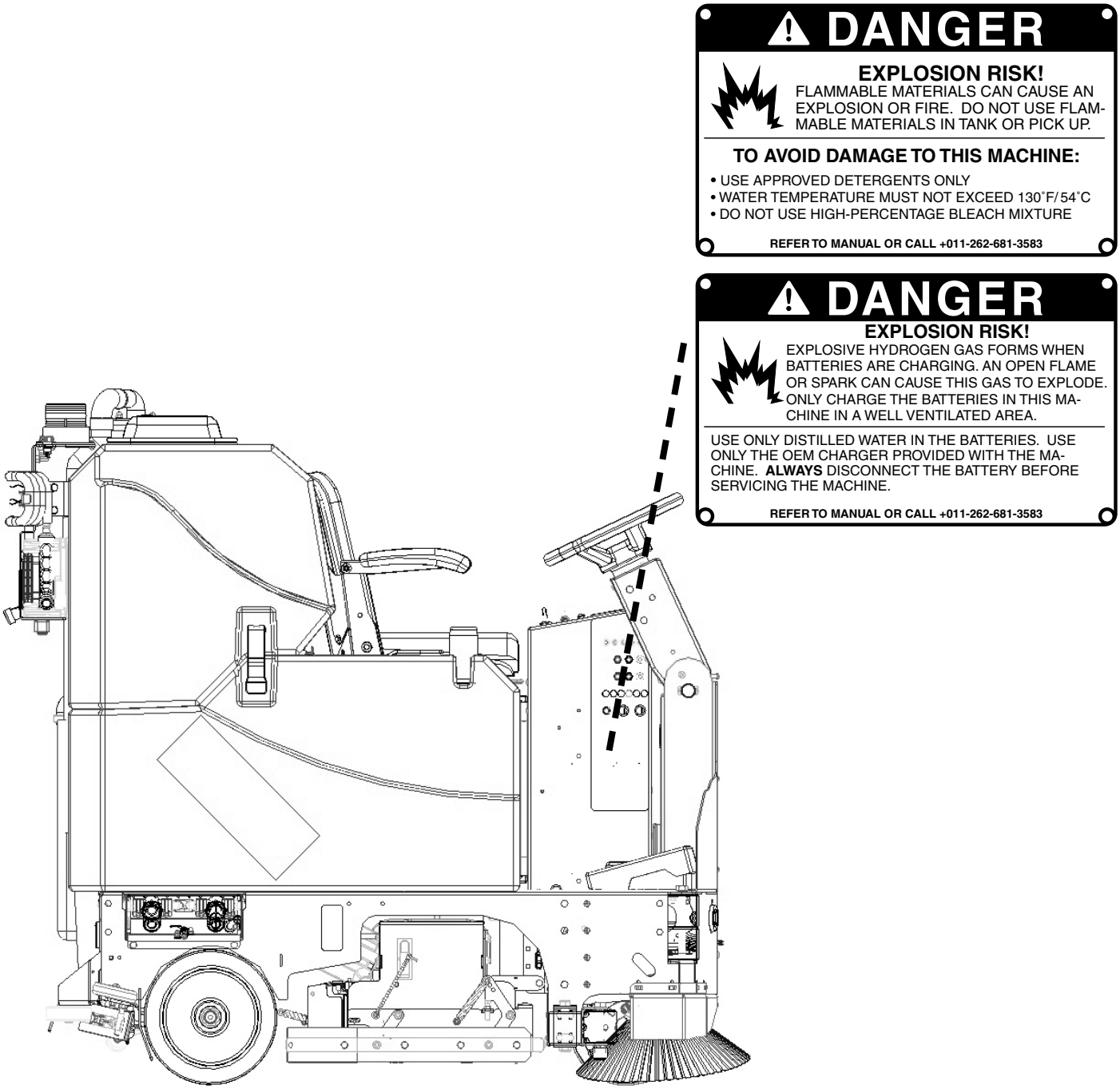

LCD SCREEN

SCREEN #1 (OPERATOR)

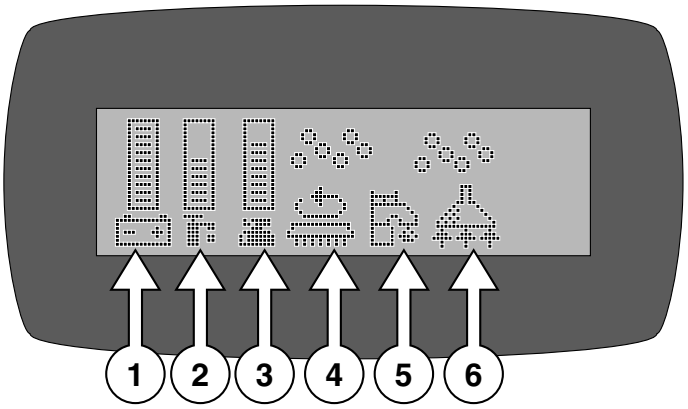

SCREEN #2 (MAINTENANCE)

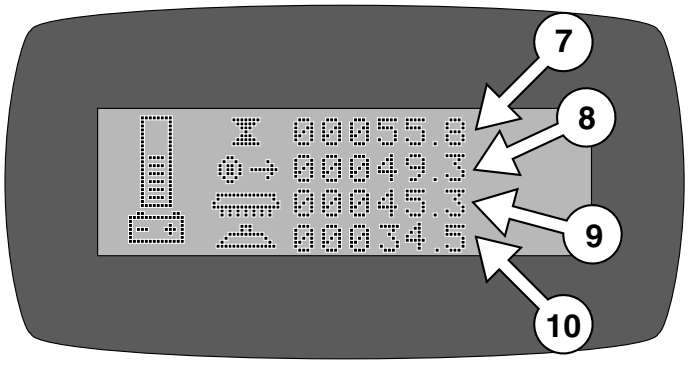

SCREEN #3 (WITH ERROR CODE)

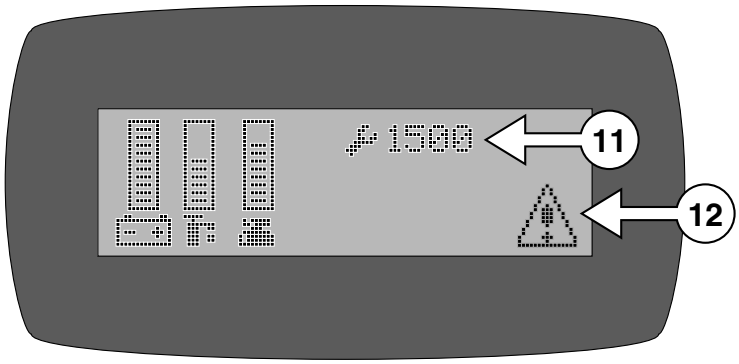

**** USE GREEN MENU SELECTION BUTTON ON CONTROL PANEL TO CHANGE SCREENS ****

1. **BATTERY LEVEL INDICATOR** - Indicates the energy level remaining in the Batteries *(Shown on all menu displays)*
2. **SOLUTION OUTPUT INDICATOR** - Indicates the gallons per minute *(GPM)* 0 - 1.0
3. **SCRUBDECK DOWN PRESSURE INDICATOR** - Sets the down pressure on the Brushes / Pads
4. **SCRUB MOTORS ON** - Indicates the Brush Motors are in operation
5. **SOLUTION ON** - Indicates the solution flow is *ON*
6. **VACUUM ON** - Indicates the Vacuum is *ON*
7. **KEY SWITCH HOUR METER** - Indicates total hours the machine has had keyswitch *ON*
8. **TRANSPORT HOUR METER** - Indicates total hours the drive system has been in operation
9. **SCRUB BRUSH HOUR METER** - Indicates total hours the brush motors have been in operation
10. **VACUUM HOUR METER** - Indicates total hours the vacuum motor has been used
11. **DIAGNOSTIC CODE** - Displays diagnostic code which helps troubleshoot issues
12. **ERROR WARNING SYMBOL** - Indicates when there has been a diagnostic code error

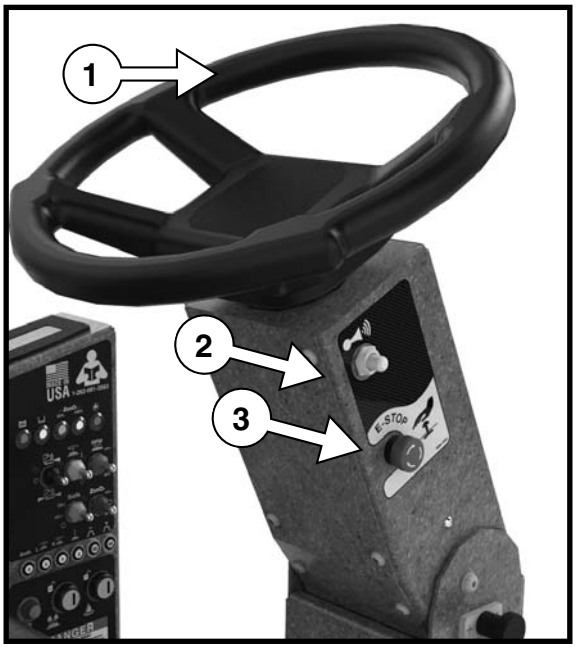
1
2
3
E-STOP
USA

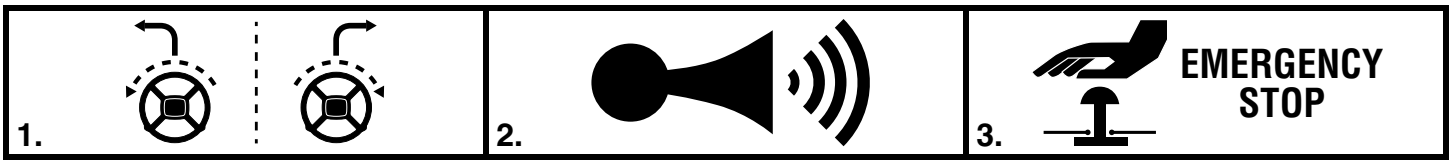
1.
2.
3.
EMERGENCY
STOP

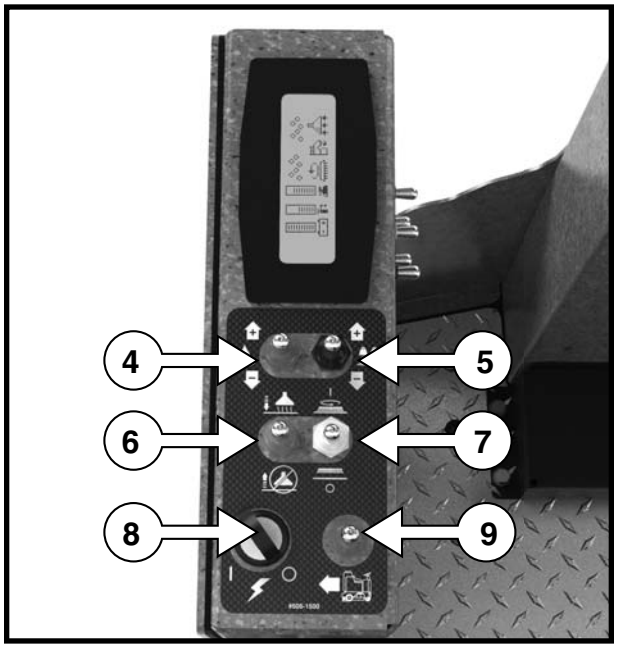
4
5
6
7
8
9

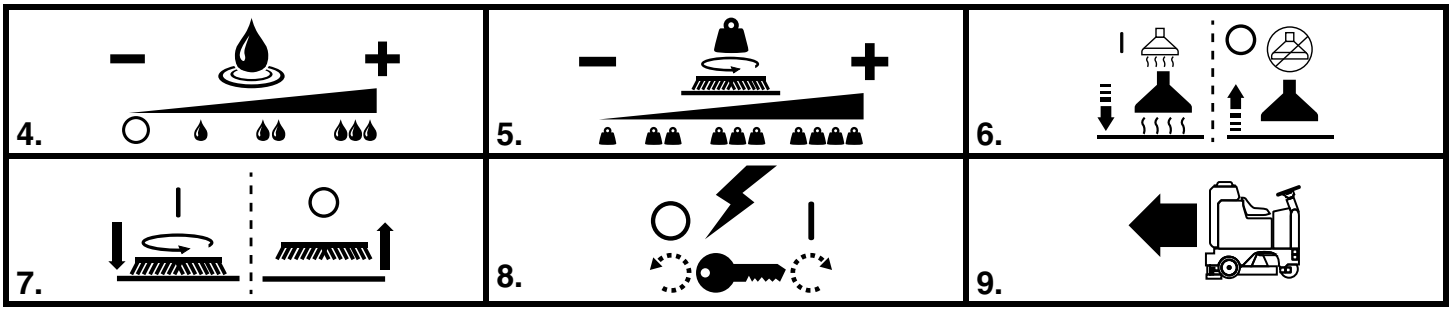
4.
5.
6.
7.
8.
9.

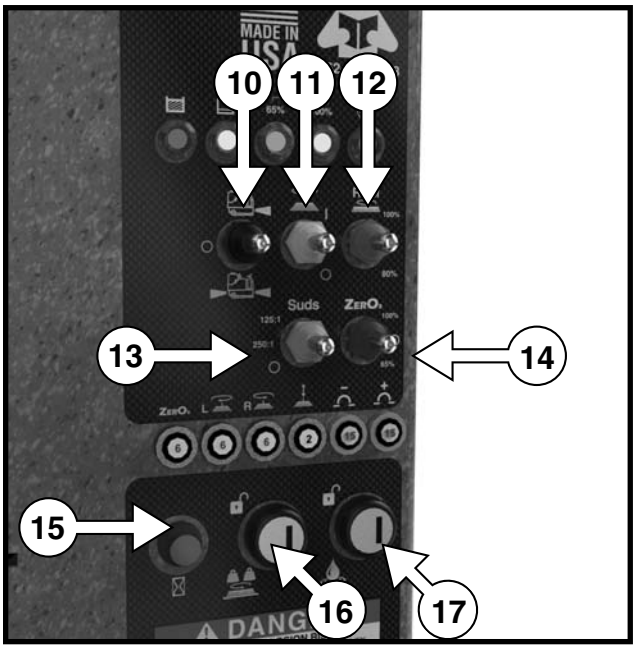
MADE IN USA
10
11
12
13
14
15
16
17
Suds
ZerO3
DANG

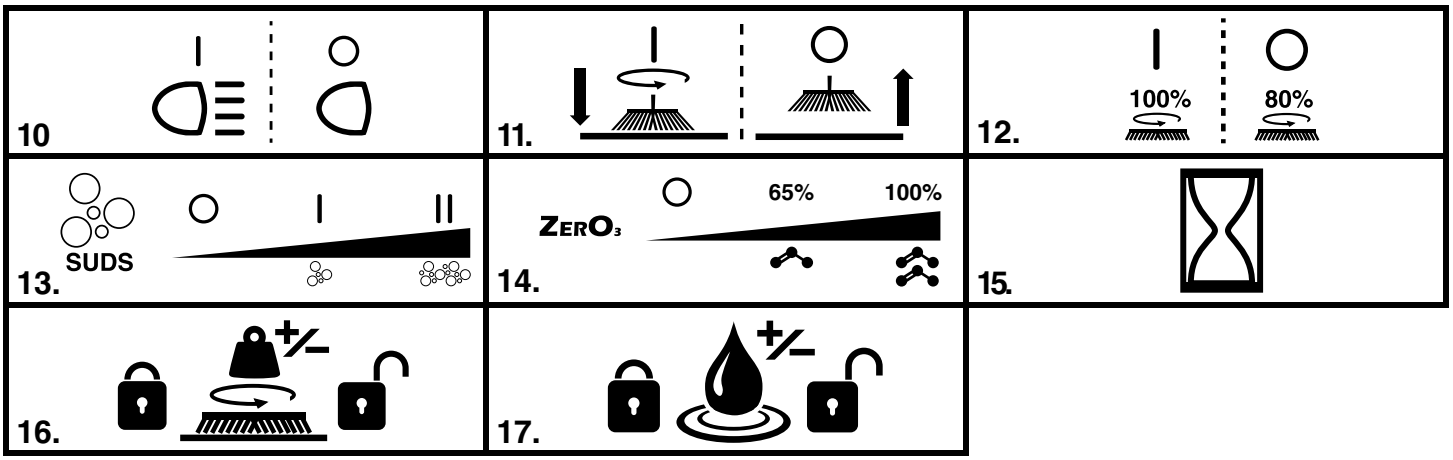
10
11.
12.
100%
80%
13.
SUDS
14.
ZerO3
65%
100%
15.
16.
17.

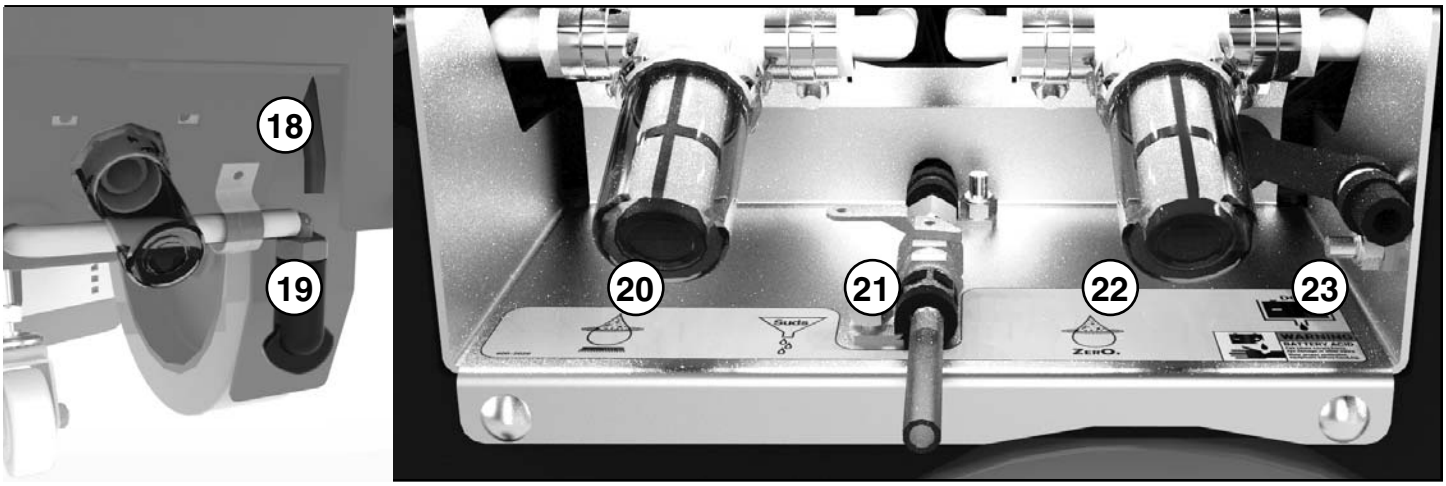

18. VACUUM DISCHARGE: Water passed through the Vacuum Motor will be visible in the reservoir and excess will flow from the blue hose. Indicates service required.	**19. VAC BOX UNLOADER:** Unloader valve for the Yellow Vac Box. Water present in the Yellow Vac Box will drain when vacuum is off.	**20. SOLUTION FILTER:** Standard Solution Feed Filter for scrubdeck.
21. SUDS DRAIN: Drain detergent from Suds reservoir.	**22. ZERO3 FILTER:** Optional ZERO3 (O3+) Ozone System Solution Filter.	**23. BATTERY DRAIN:** Drain any fluid from Poly Battery Box.

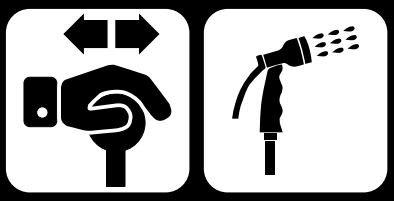

SPRAY JET CONTROLS (OPTIONAL)

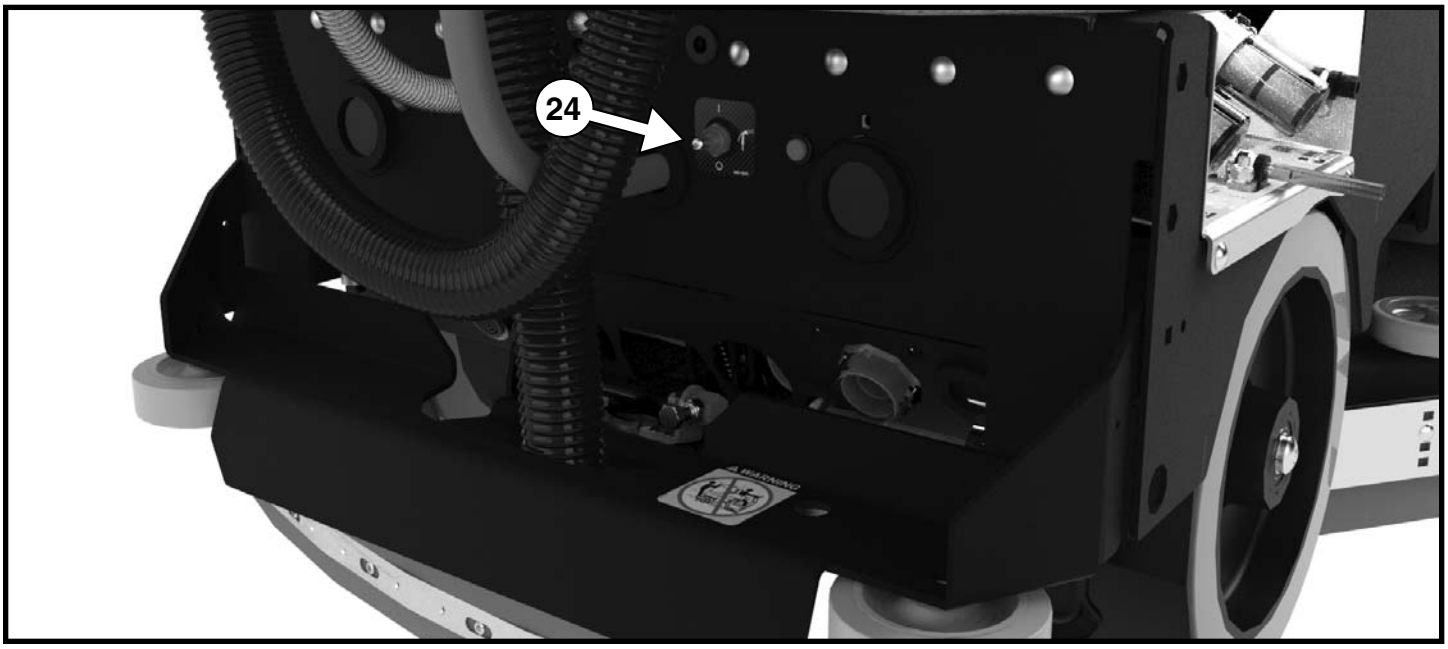

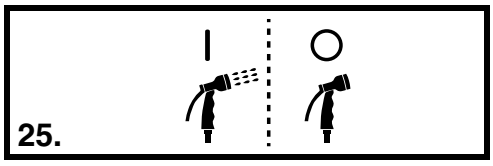

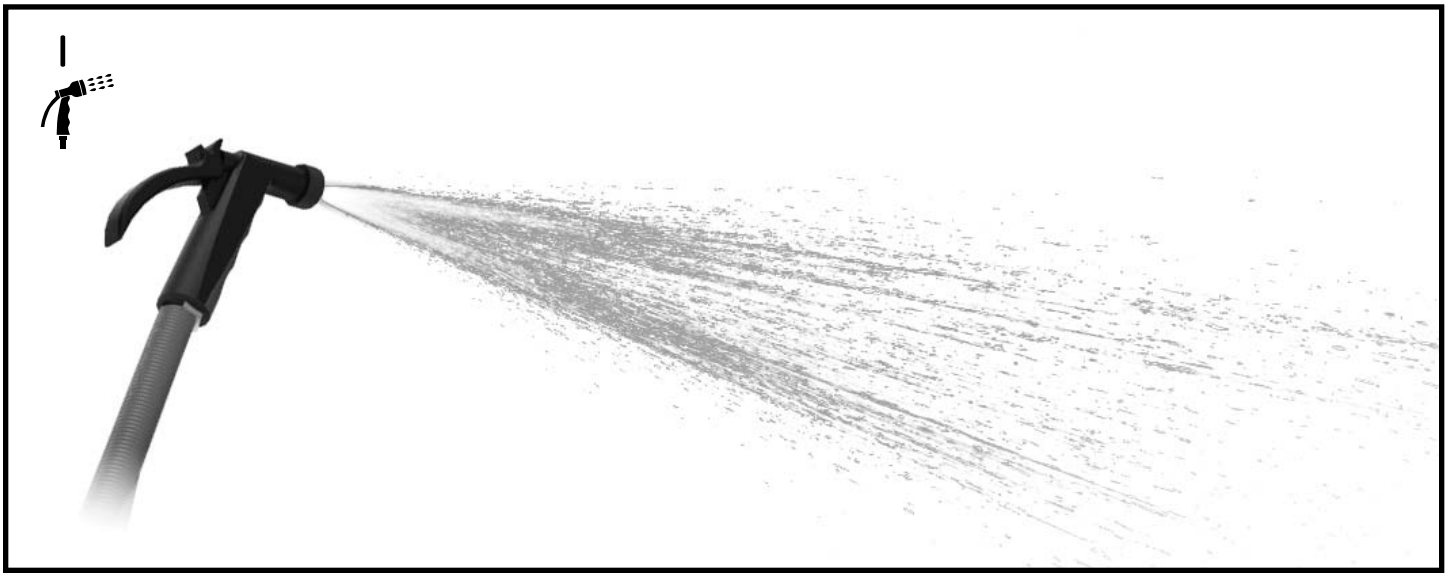

SUDS CONTROLS (OPTIONAL)

O - OFF

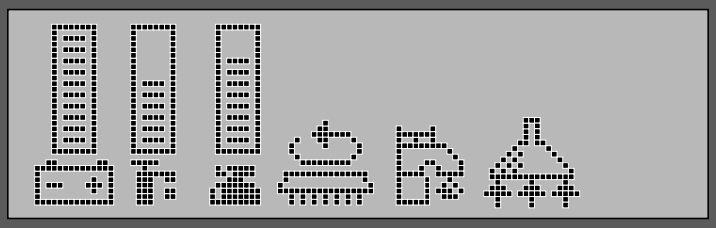

250:1 (~0.5oz / gal [~4ml / 1L]) - “Single Dose”

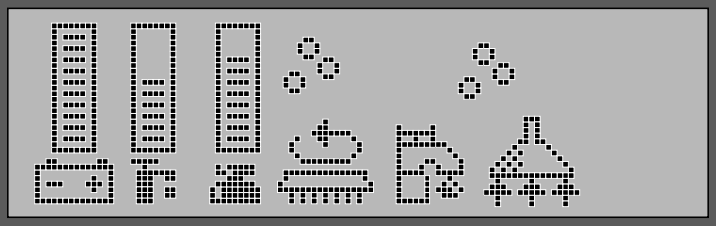

125:1 (~1oz / gal [~8ml / 1L]) - “Double Dose”

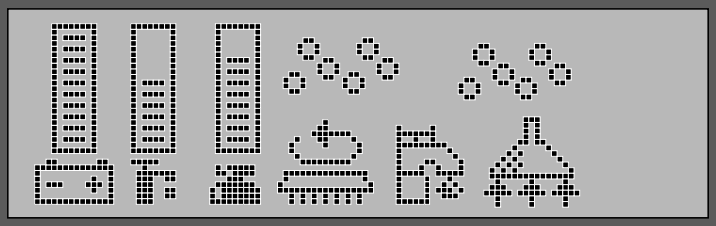

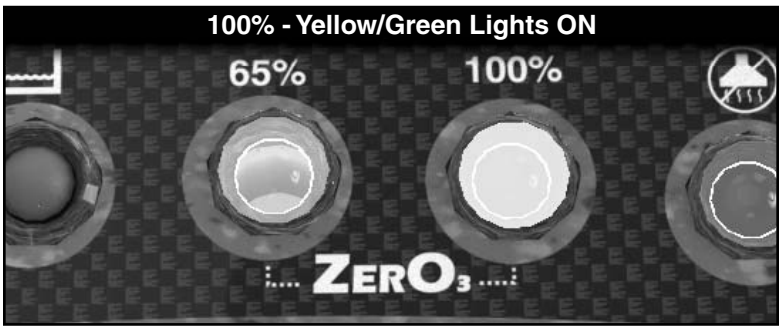

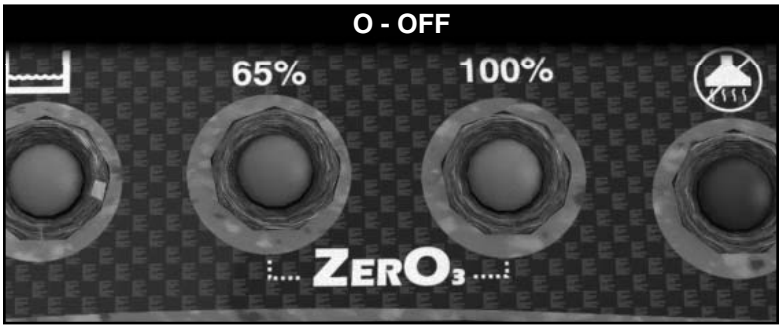

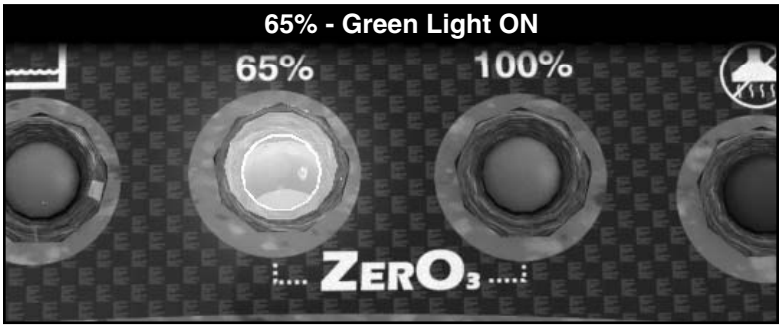

Turn regular solution OFF, when using ZERO3 Aqueous Ozone.

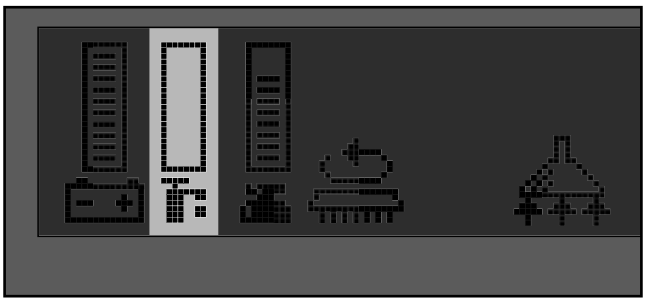

MANAGER LOCK OUTS (OPTIONAL)

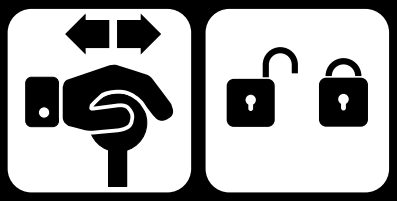

CONTROLLING MANAGER LOCK OUTS:

When the key is in the LOCKED position, keys can be removed and Solution OR Down-pressure cannot be adjusted.

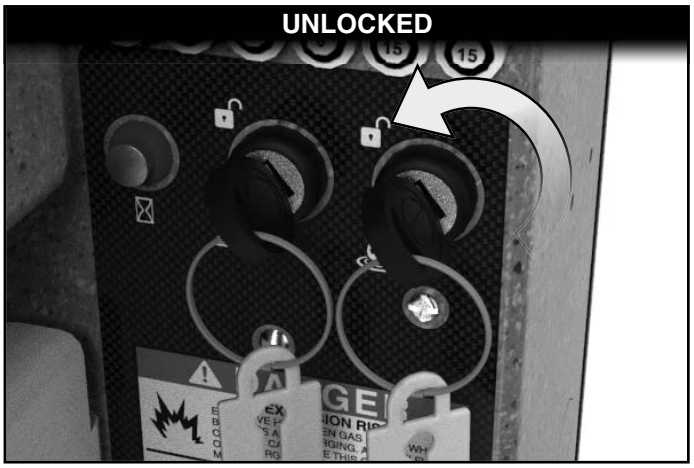

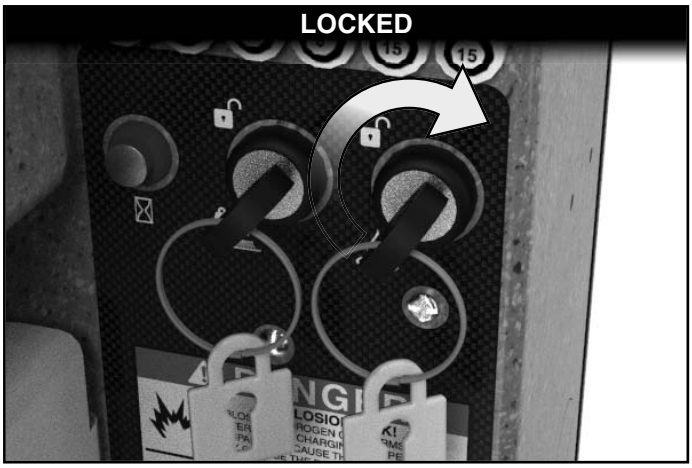

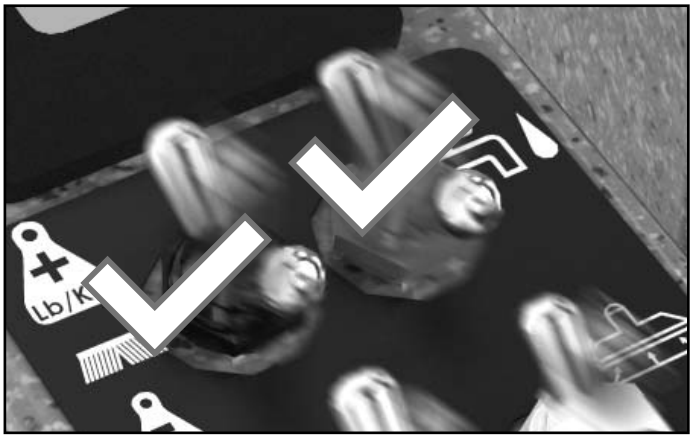

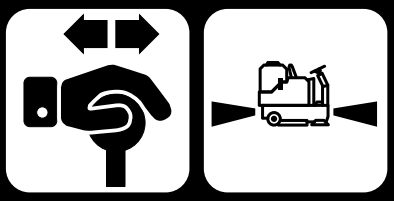

HEADLIGHTS & WORK-LIGHTS (OPTIONAL)

HEADLIGHTS ON

HEADLIGHTS ON

OFF

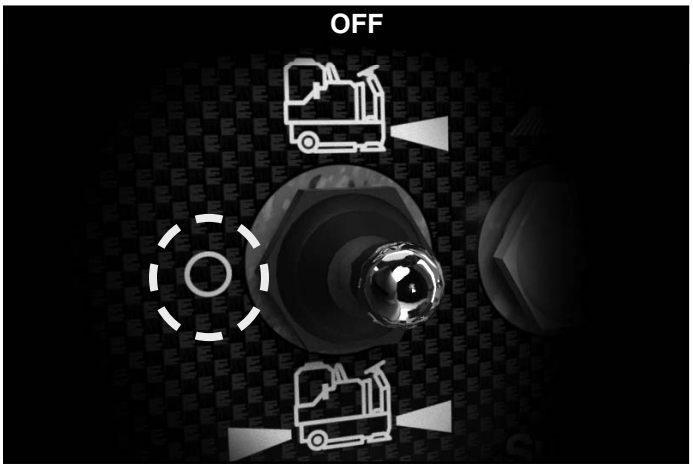

OFF

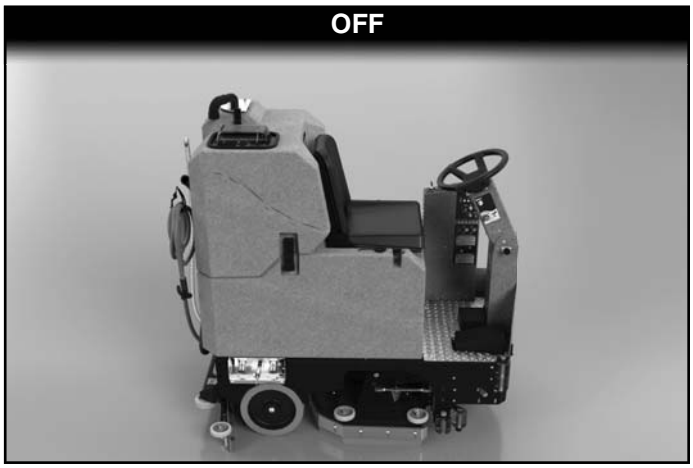

HEADLIGHTS & REAR WORK-LIGHTS ON

HEADLIGHTS & REAR WORK-LIGHTS ON

SIDE BROOM SYSTEM (OPTIONAL)

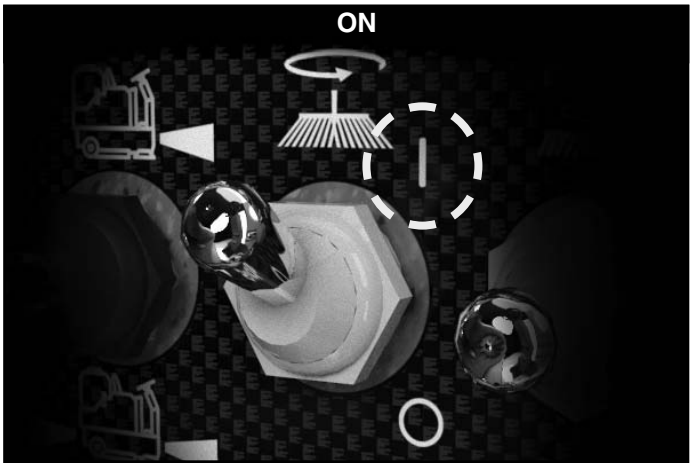

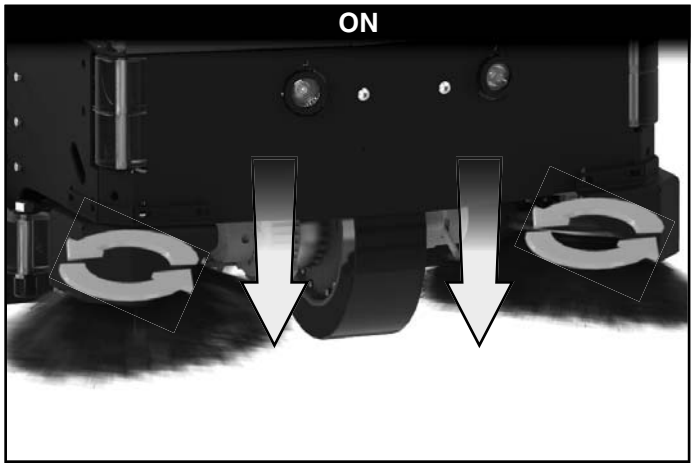

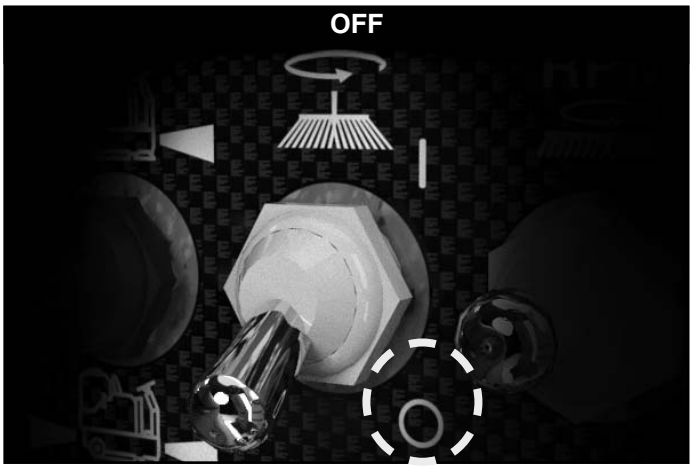

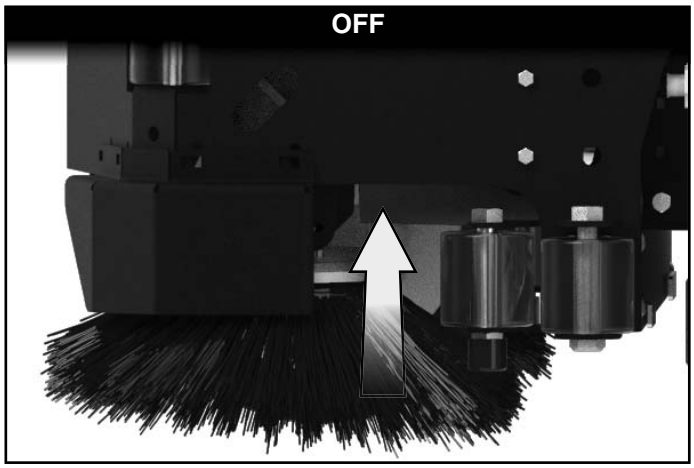

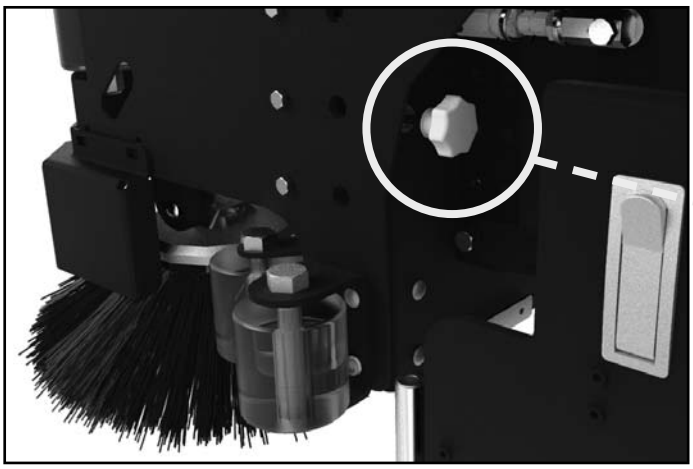

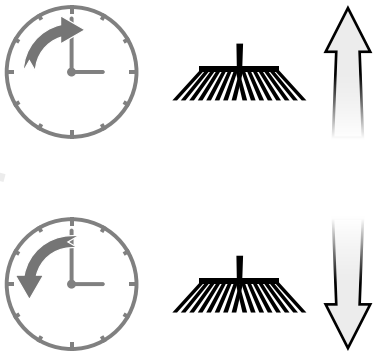

RPM MODE SWITCH (OPTIONAL)

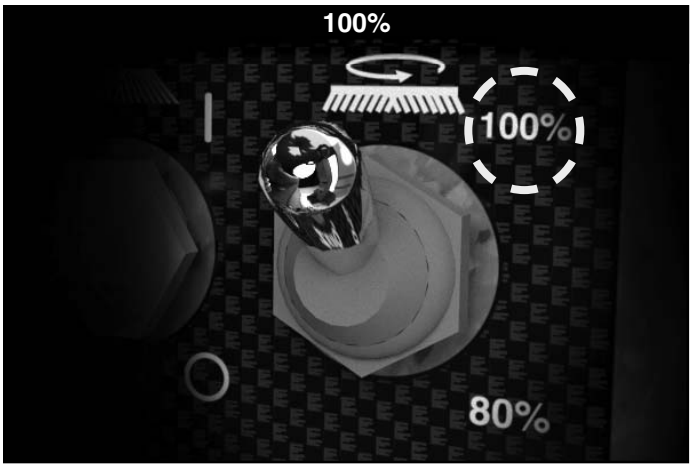

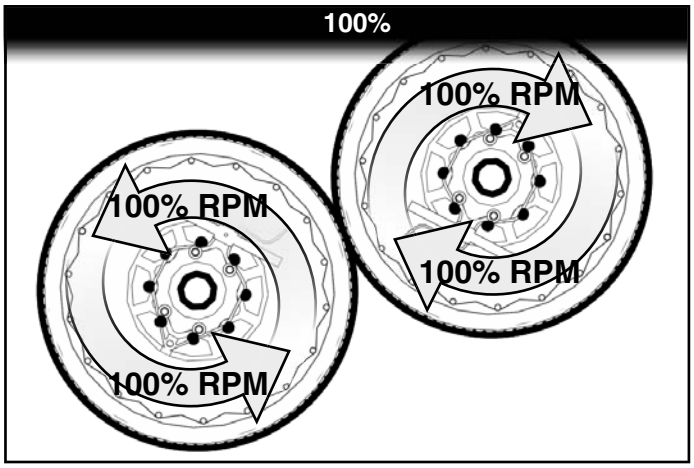

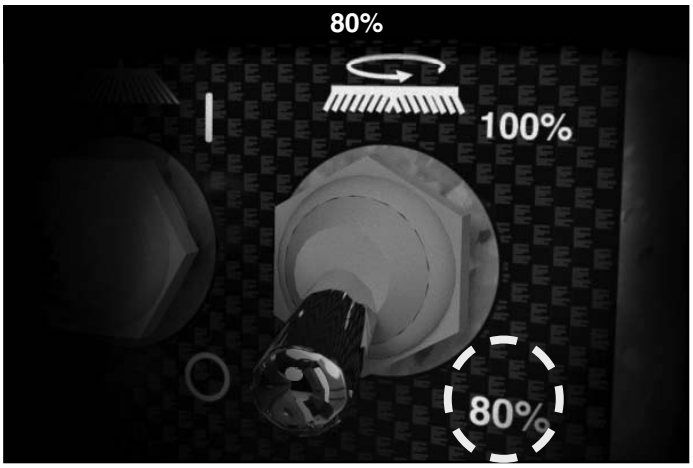

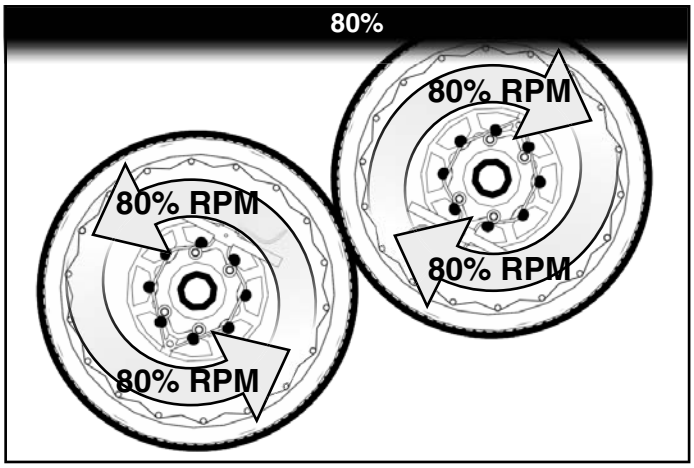

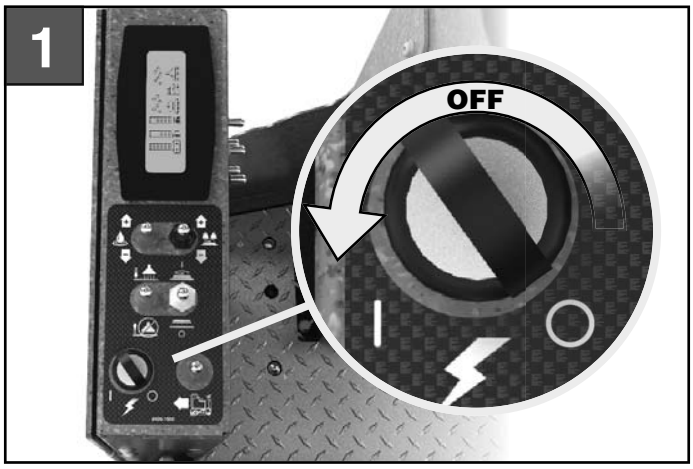

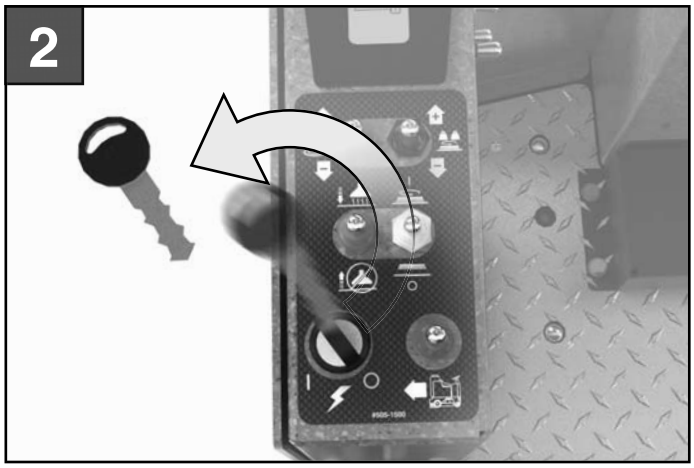

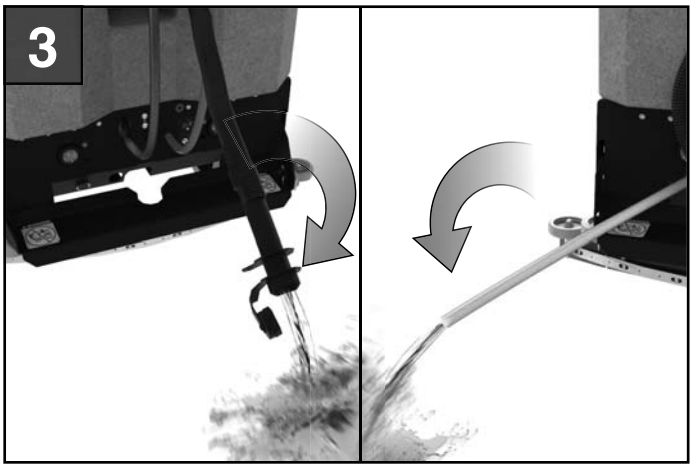

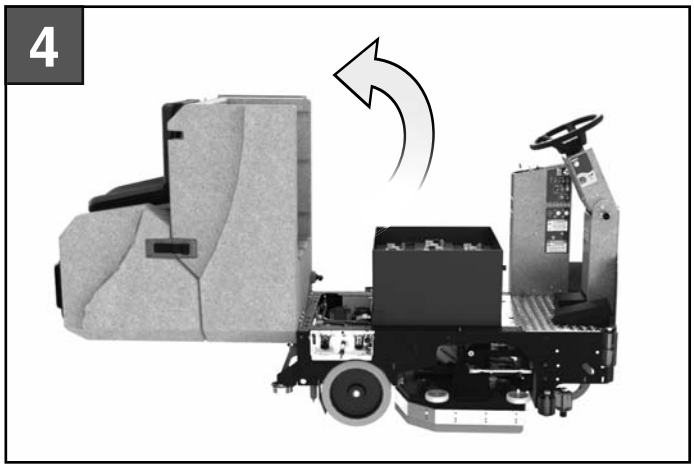

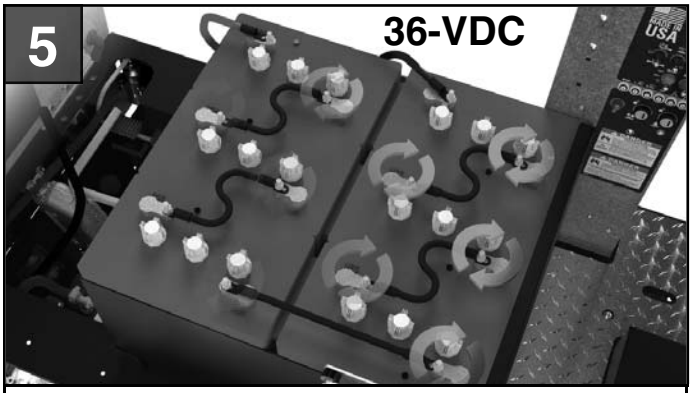

Torque Settings:
8-12 ft/lbs (10.8 - 16.3 Newton-meters)

NOTICE

Batteries are a possible environmental hazard. Consult your Battery supplier for safe disposal methods.

⚠ WARNING

Before you service a Battery, always wear face protection, protective gloves and protective clothing. Battery acid or battery explosion can cause serious injuries.

⚠ WARNING

The Batteries in this machine contain sulfuric acid, which causes burns to skin. If battery acid contacts clothing or skin, rinse the effected area with cold water immediately. If battery acid gets on your face or in your eyes, flush the area immediately with cold water and seek medical attention.

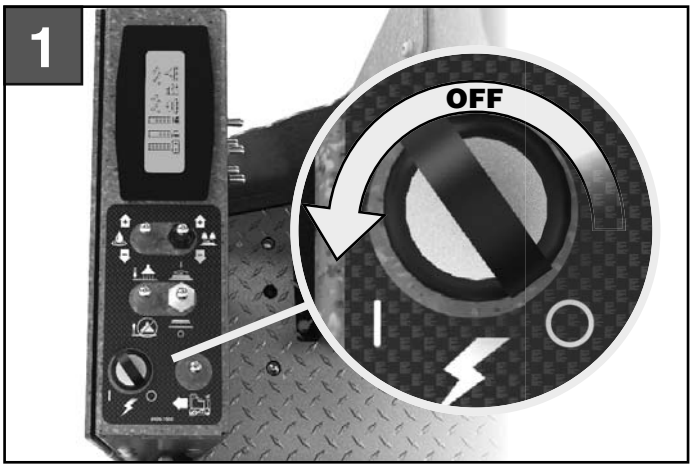
1
OFF

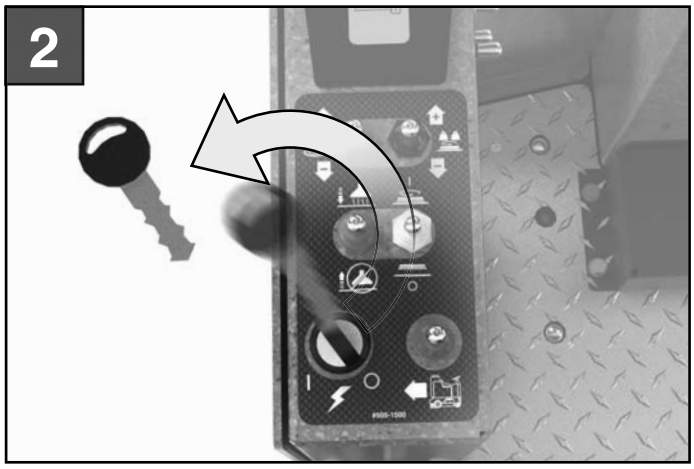
2

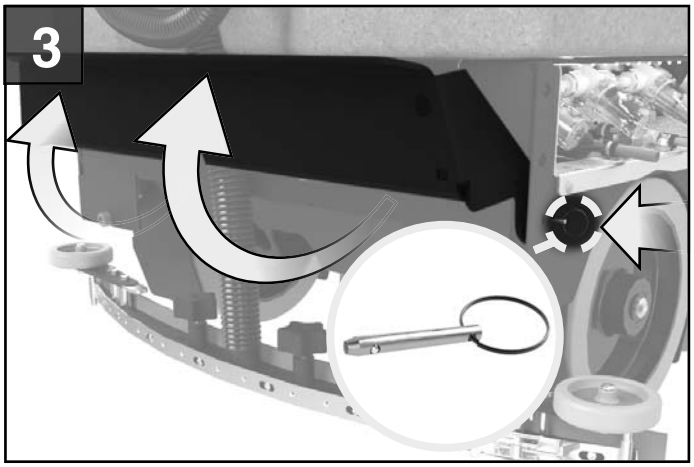
3

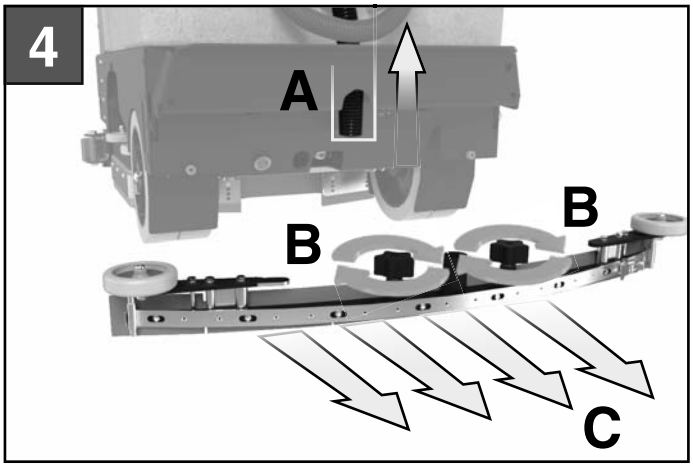
4
A
B
B
C

ADJUST SQUEEGEE

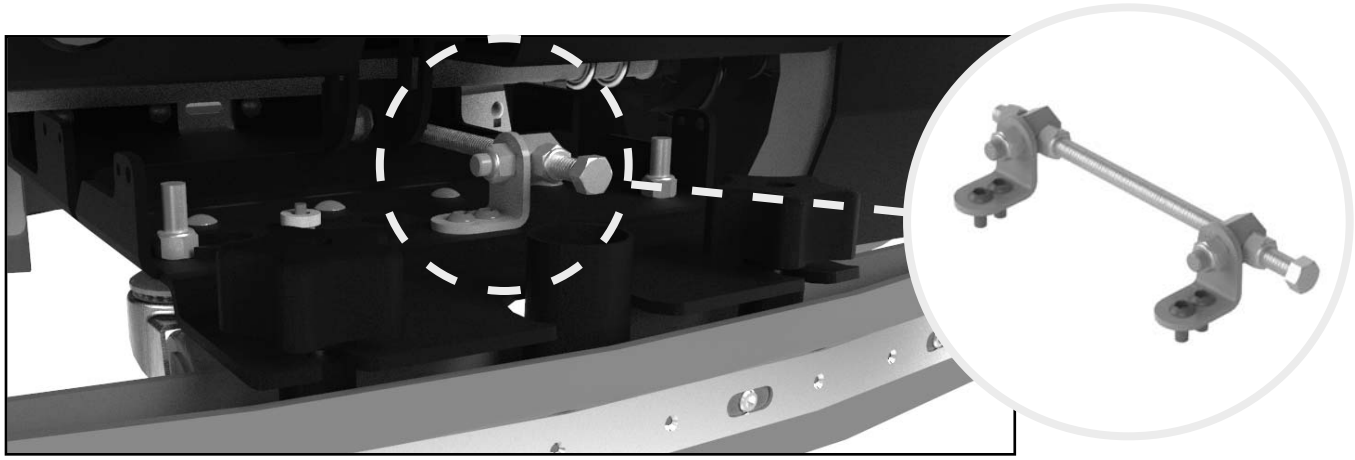

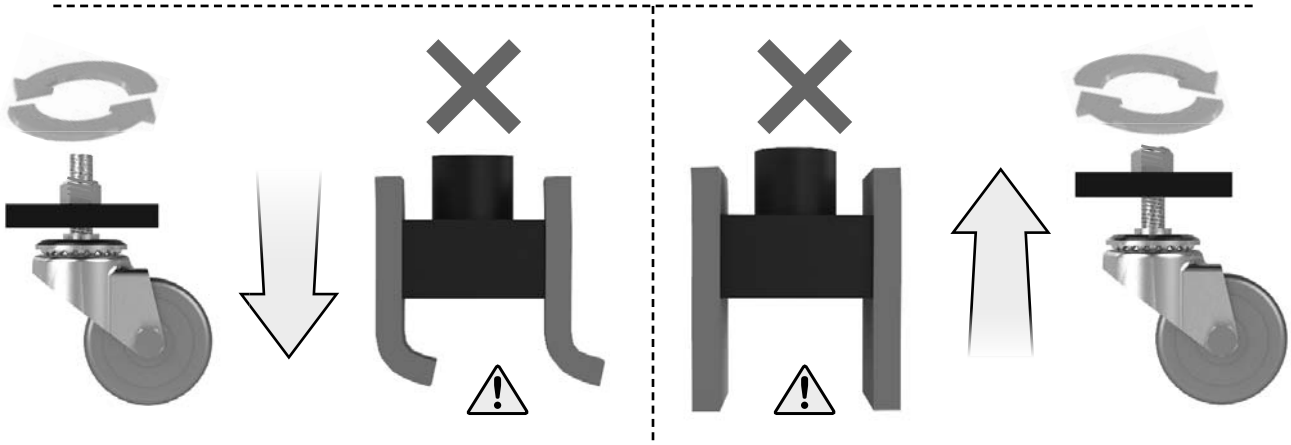

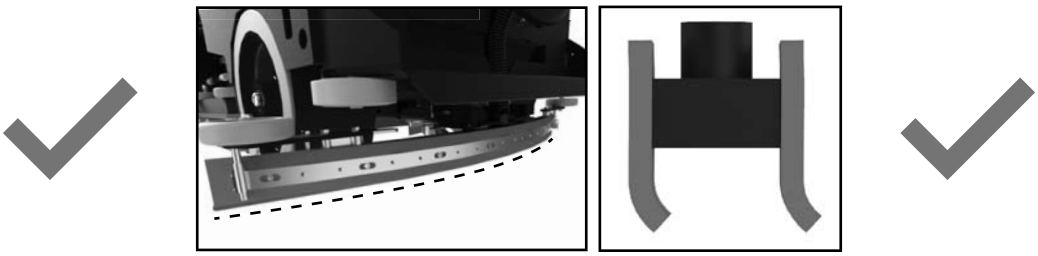

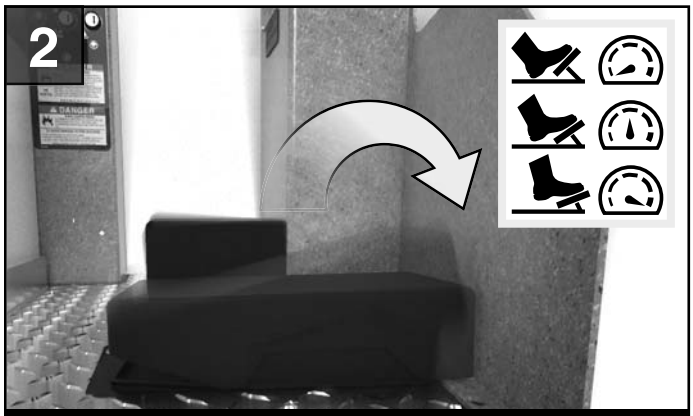

0 - 3.3mph (0 - 5.3 kph)

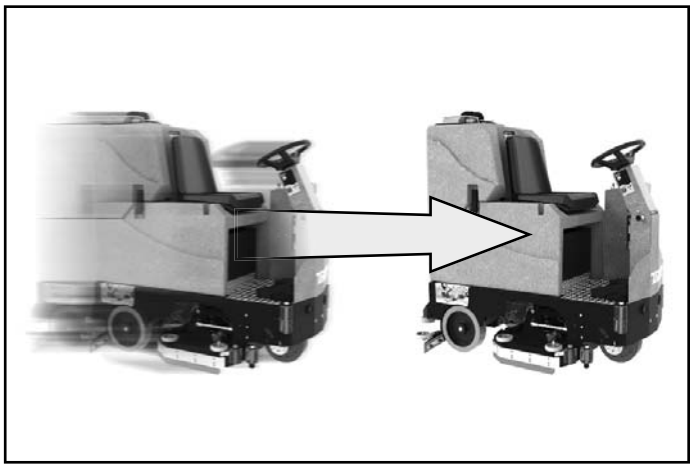

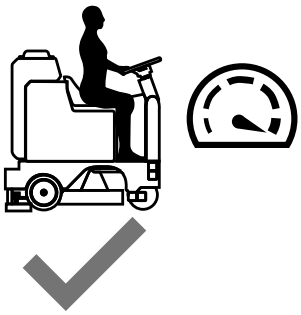

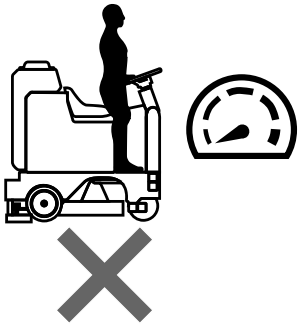

TRANSPORTATION - REVERSE

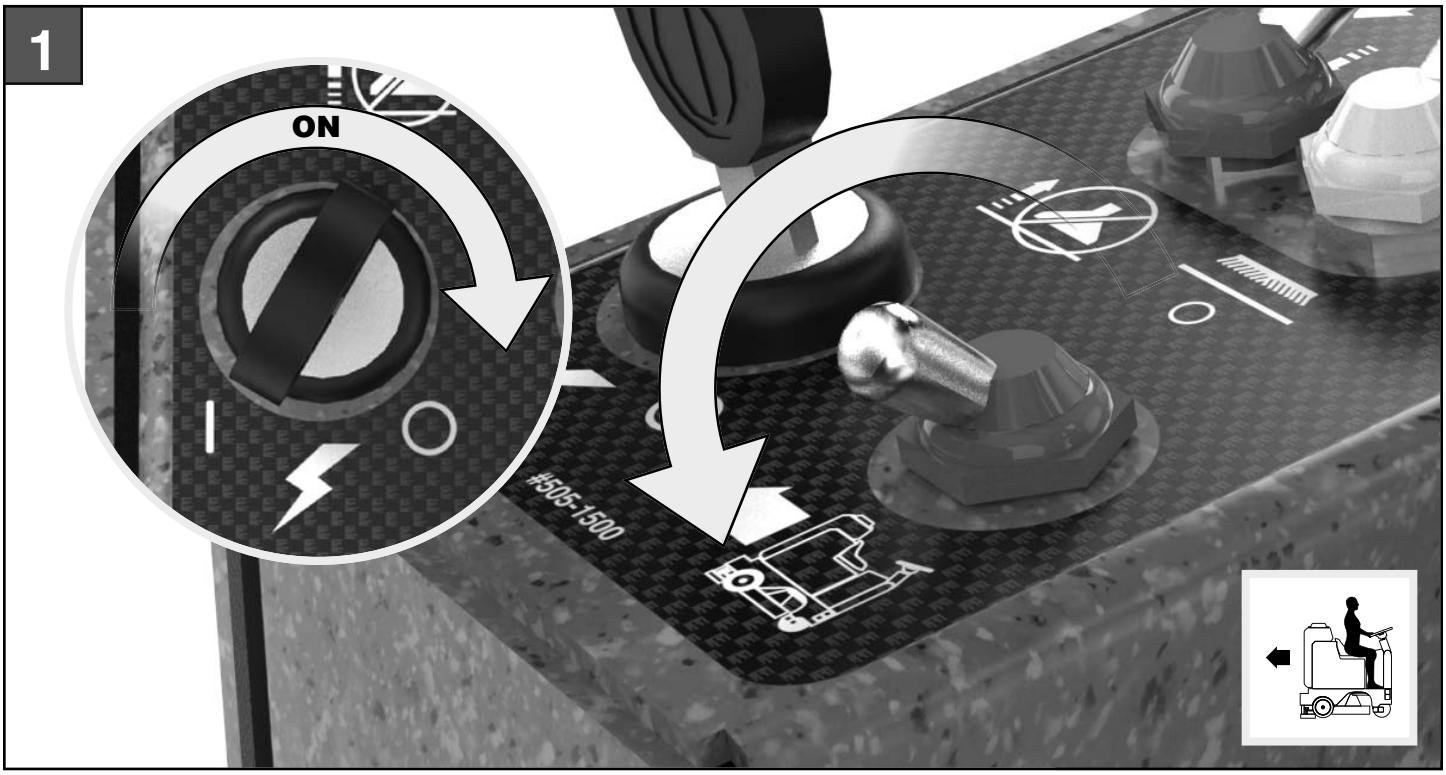

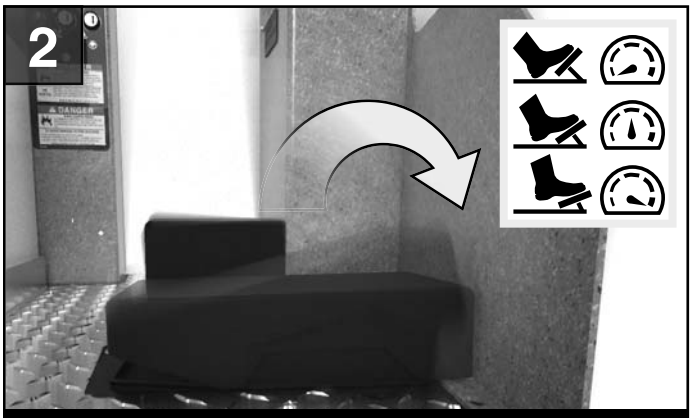

0 - 1.6mph (0 - 2.6 kph)

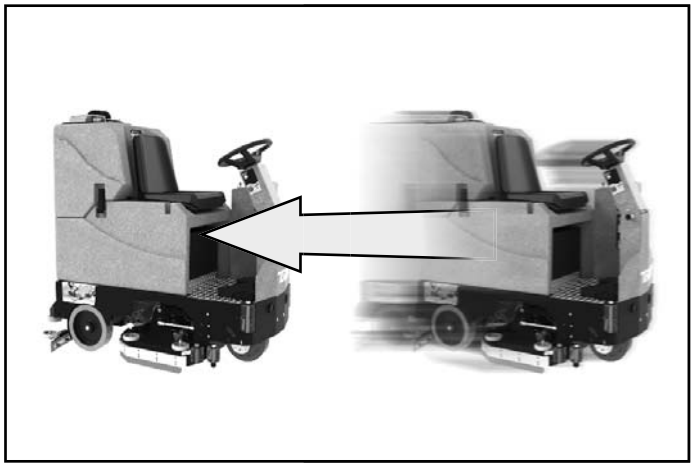

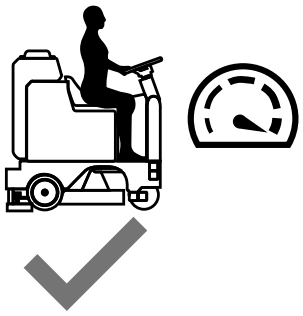

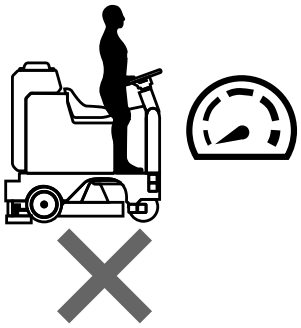

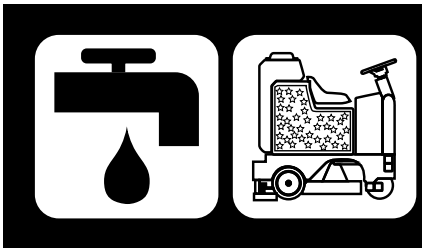

FILL SOLUTION TANK

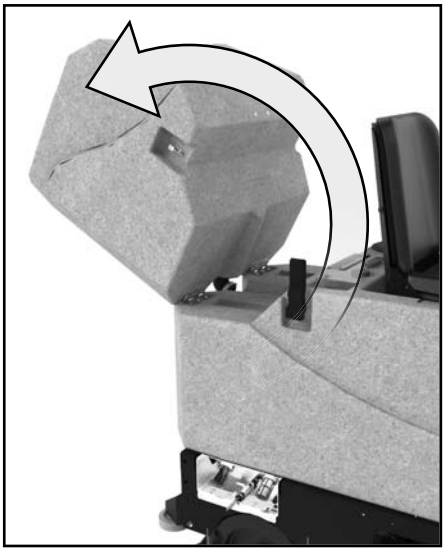

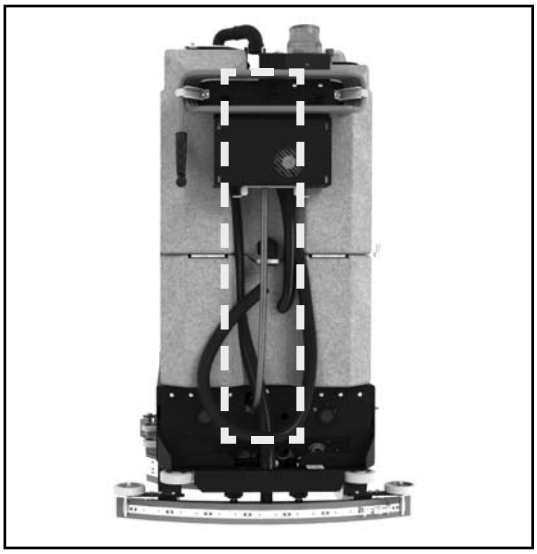

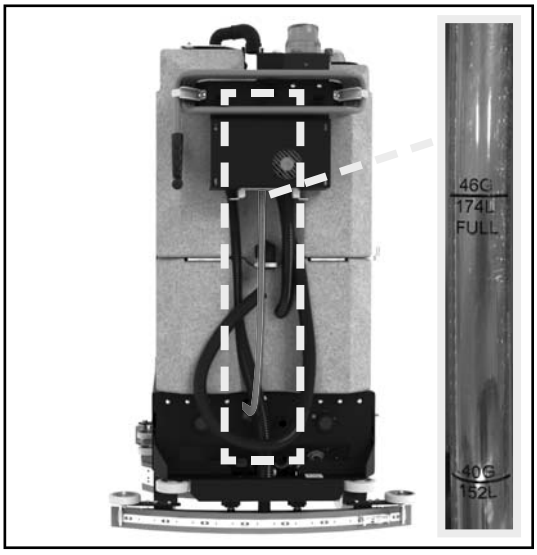

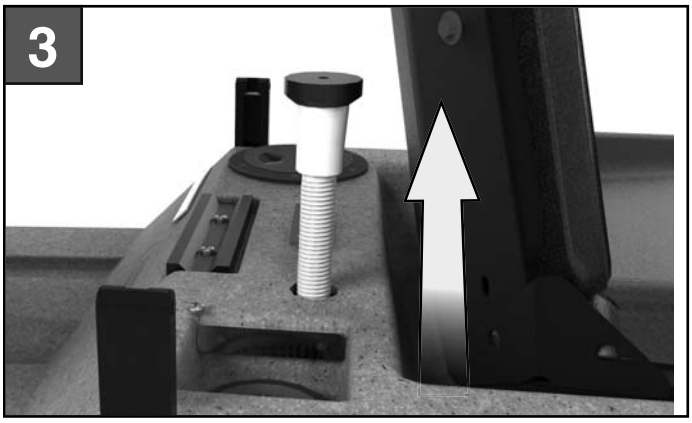

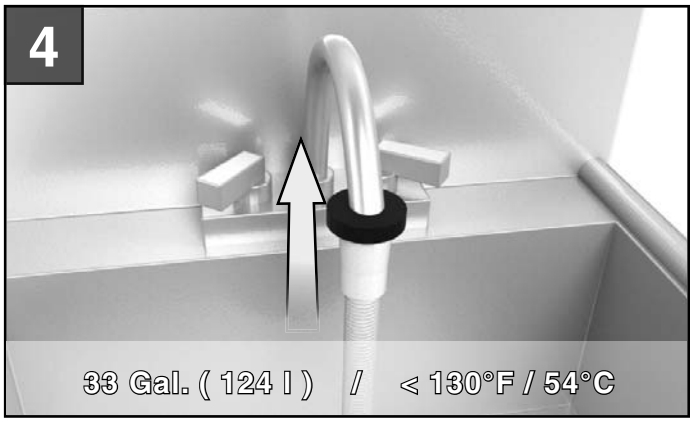

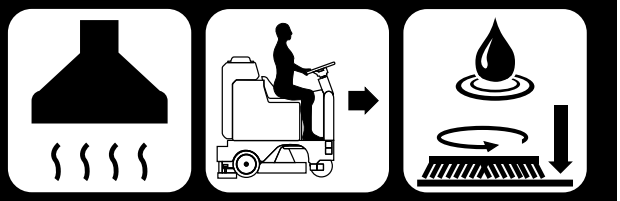

1
ON
#505-1500
505-1500

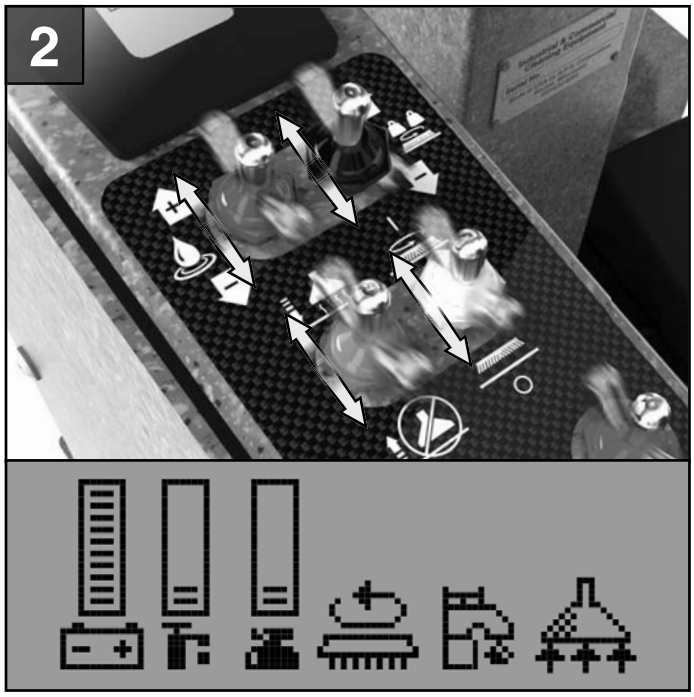
2

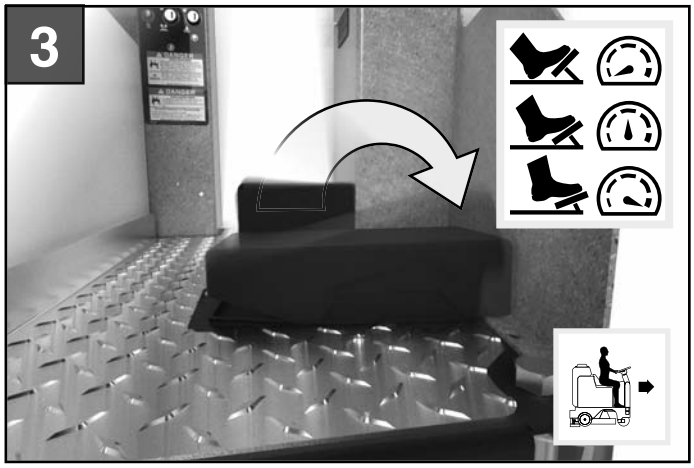
3

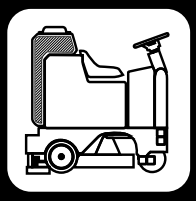

DRAINING RECOVERY TANK

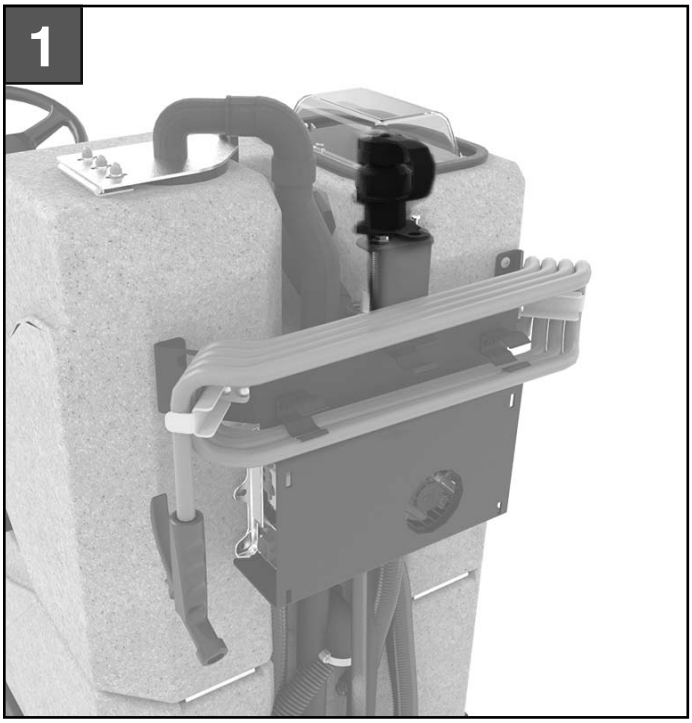

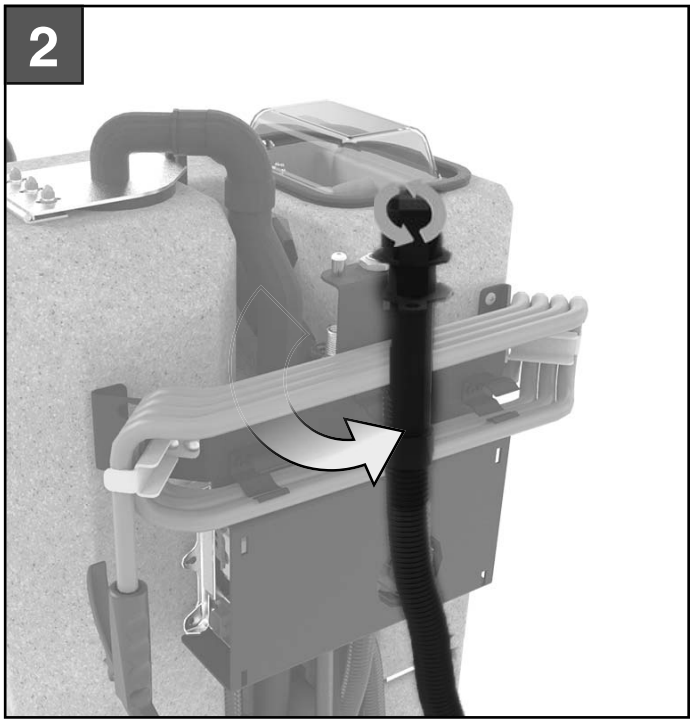

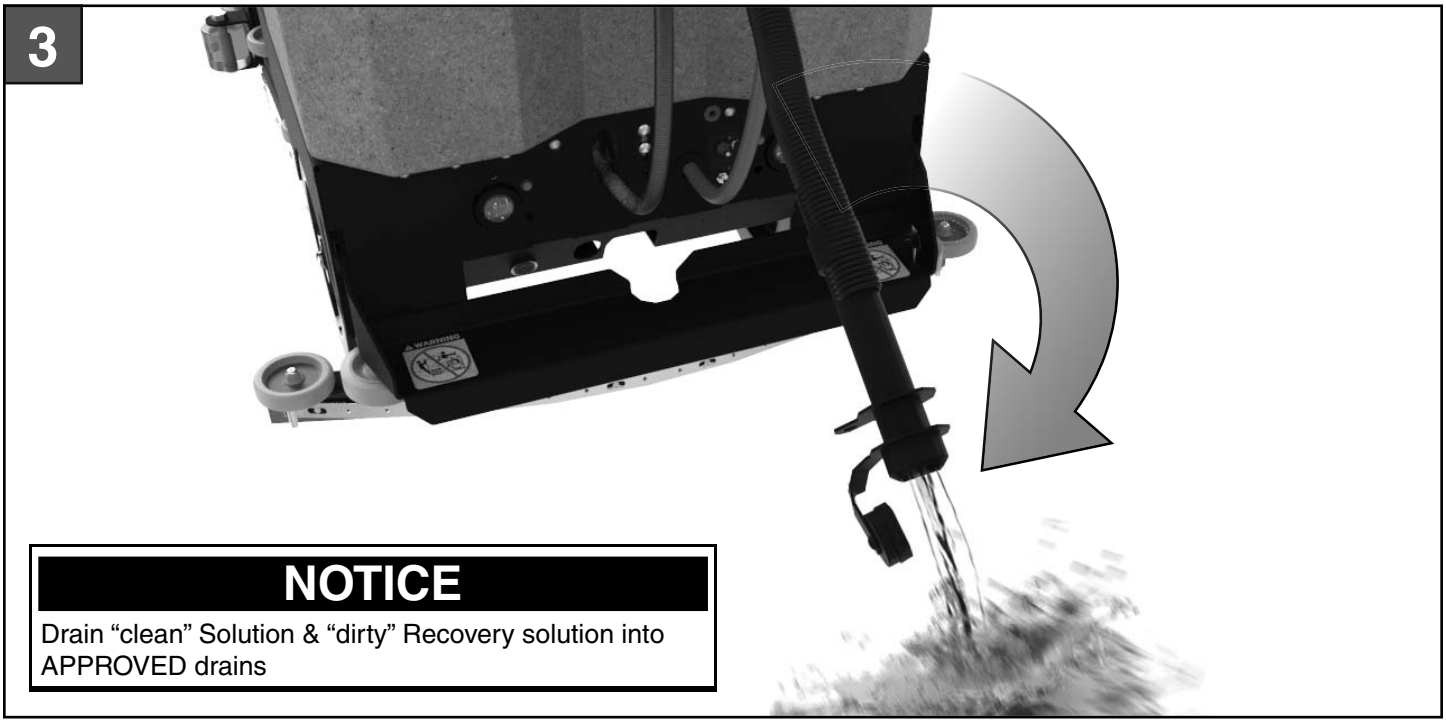

NOTICE

Drain “clean” Solution & “dirty” Recovery solution into APPROVED drains

DRAINING SOLUTION TANK

1

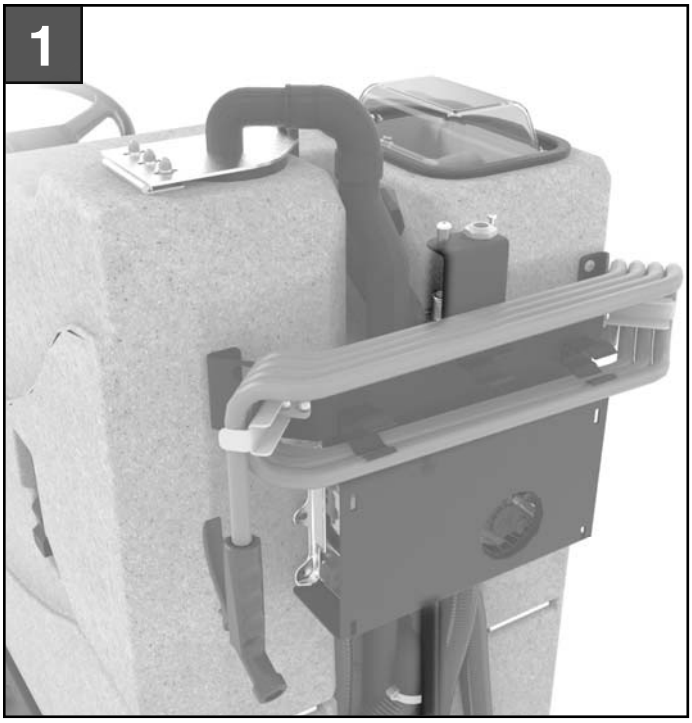

2

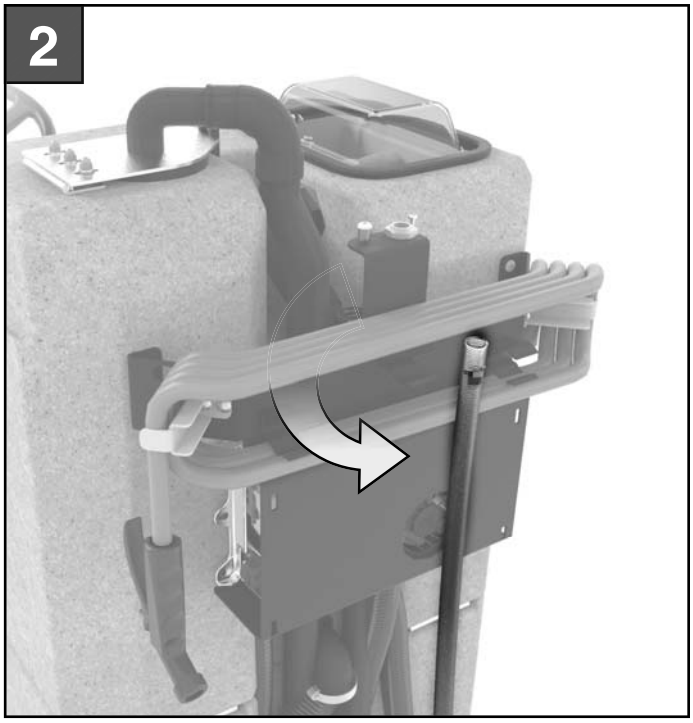

3

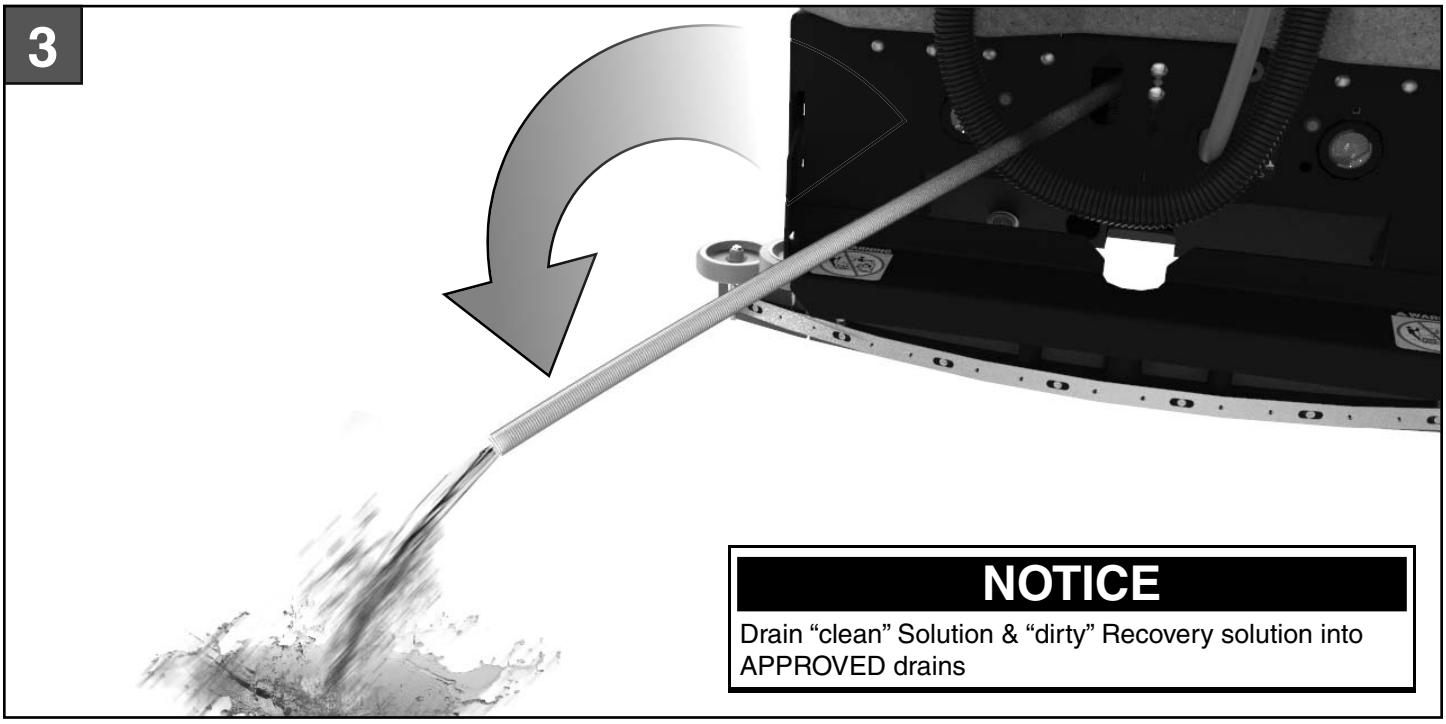

NOTICE

Drain “clean” Solution & “dirty” Recovery solution into APPROVED drains

1

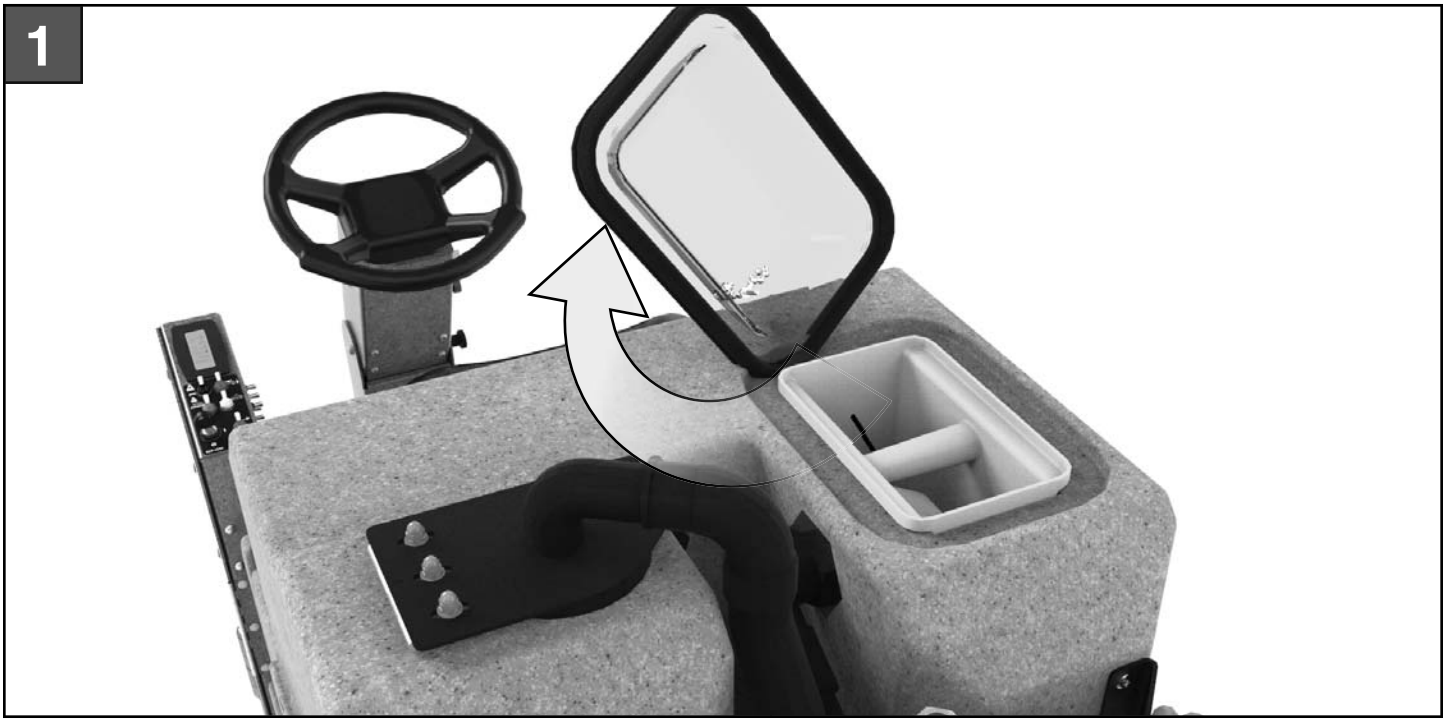

2

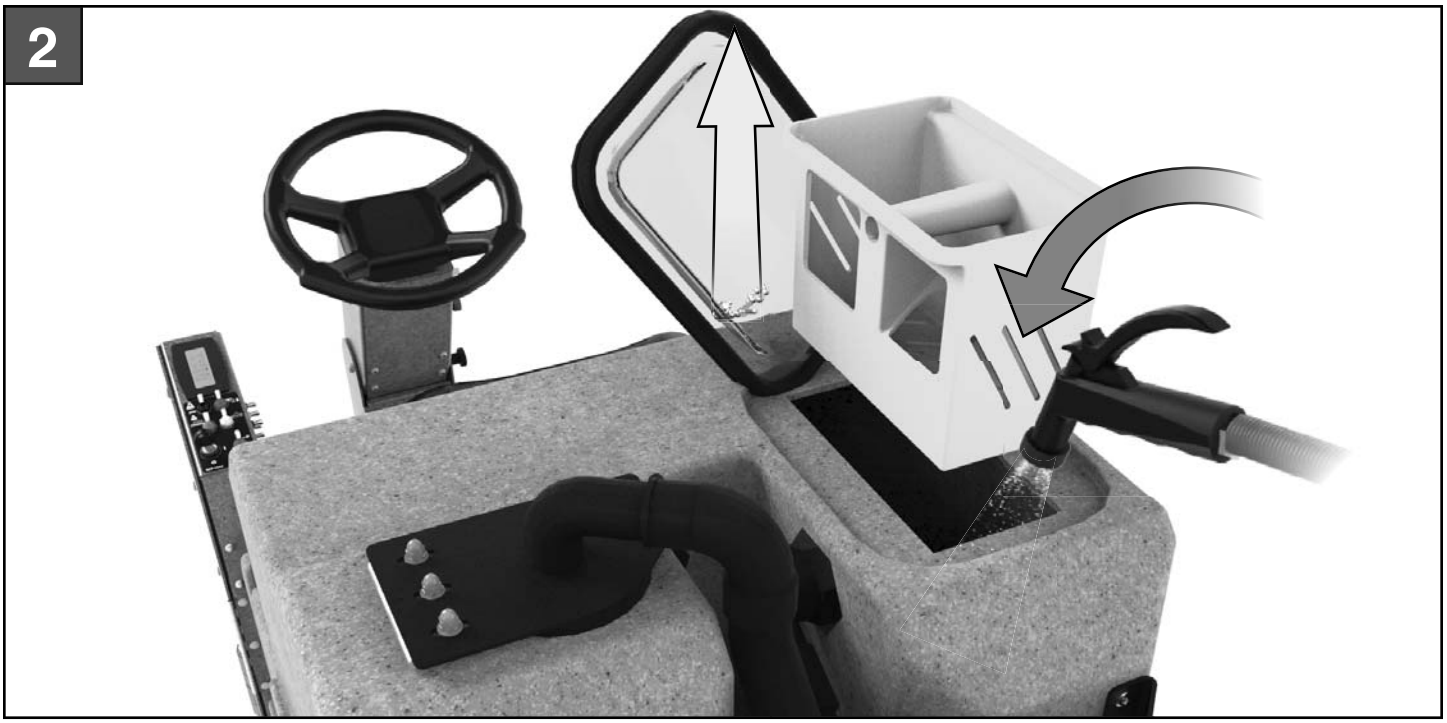

CLEAN DRAIN SAVER

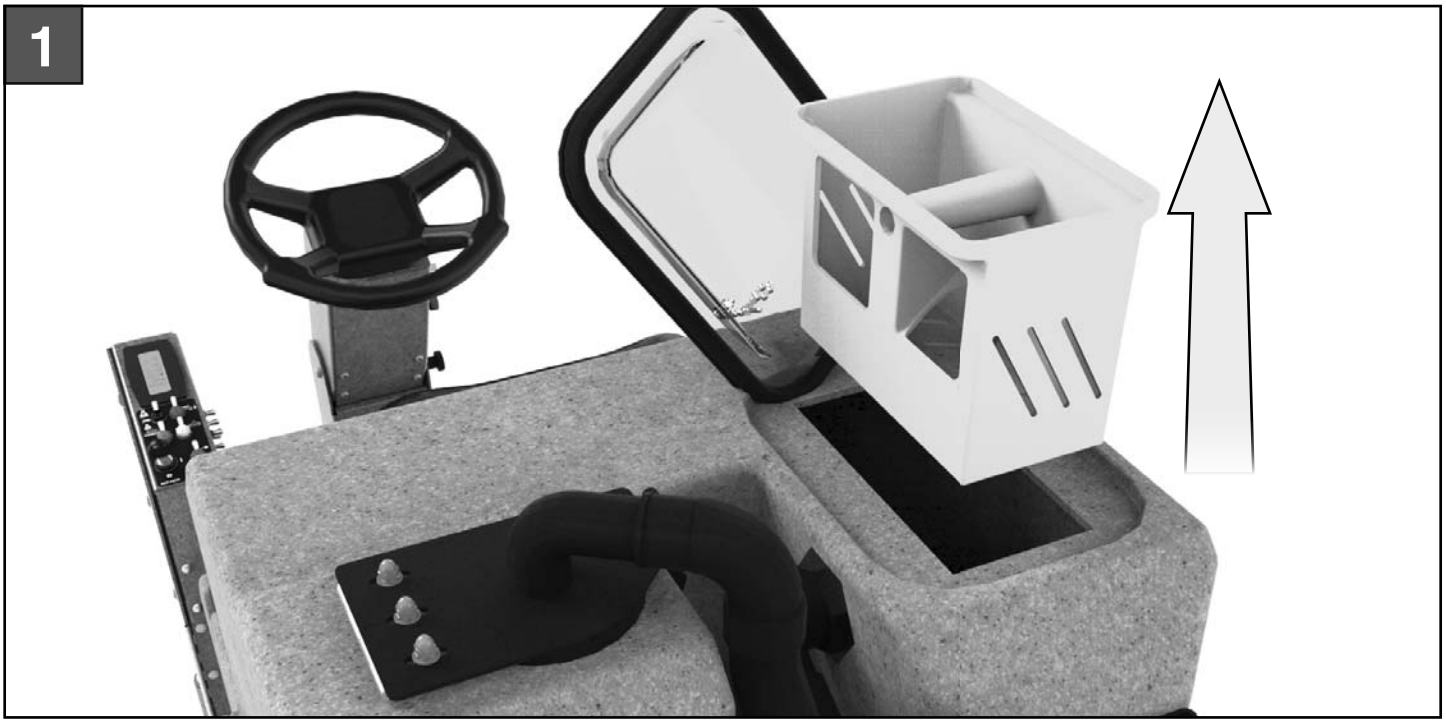

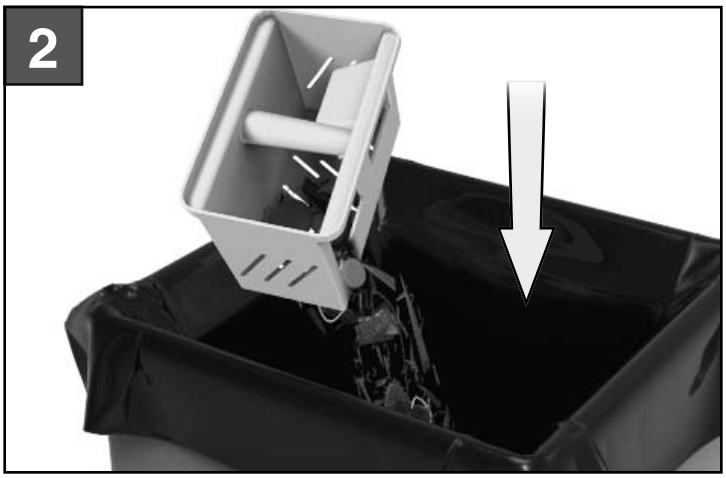

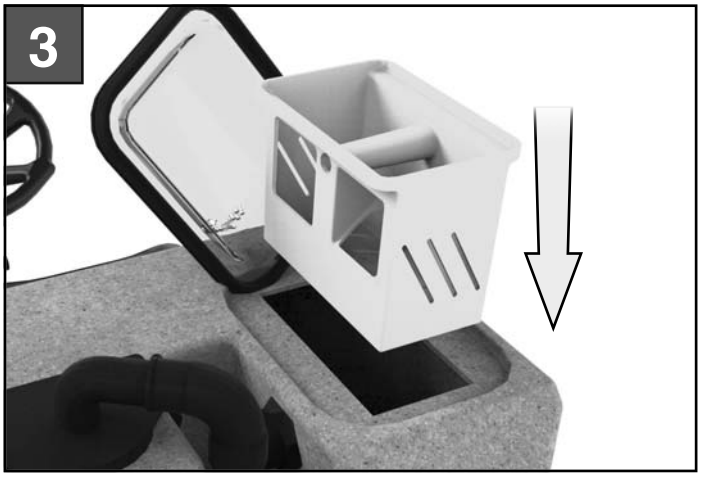

CLEAN CYLINDRICAL HOPPER

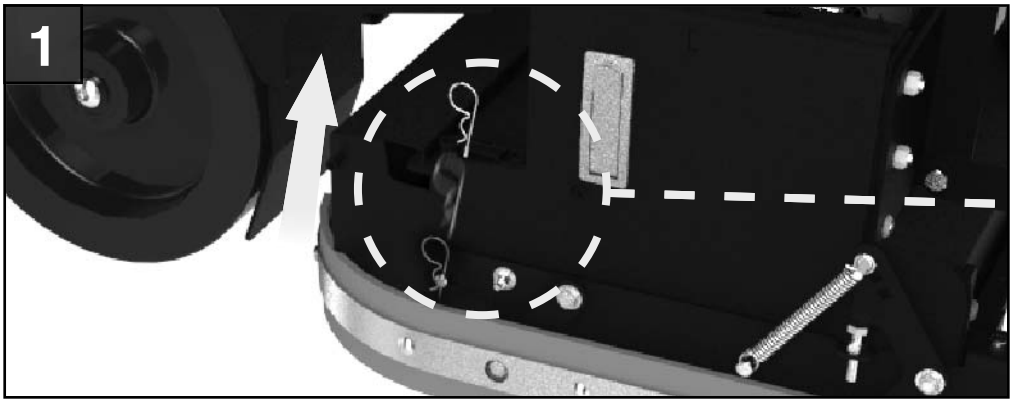

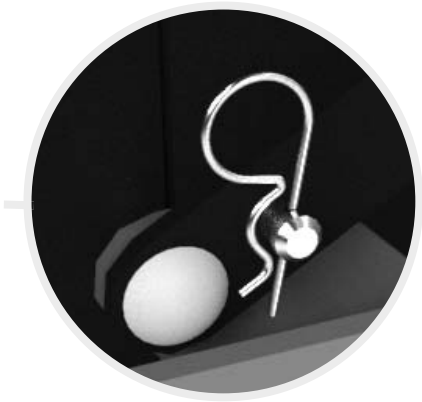

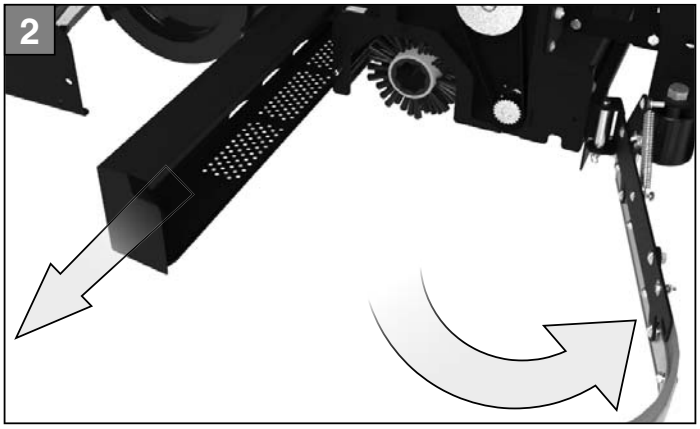

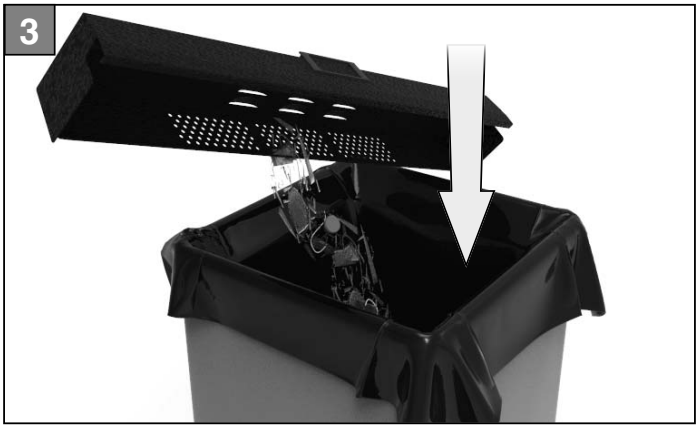

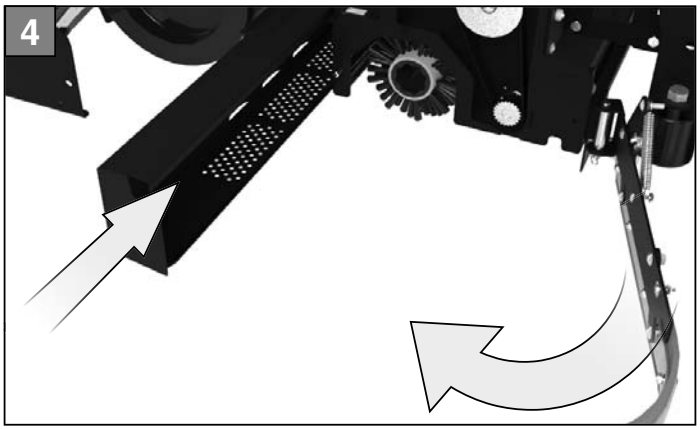

CLEAN VAC BOX SYSTEM

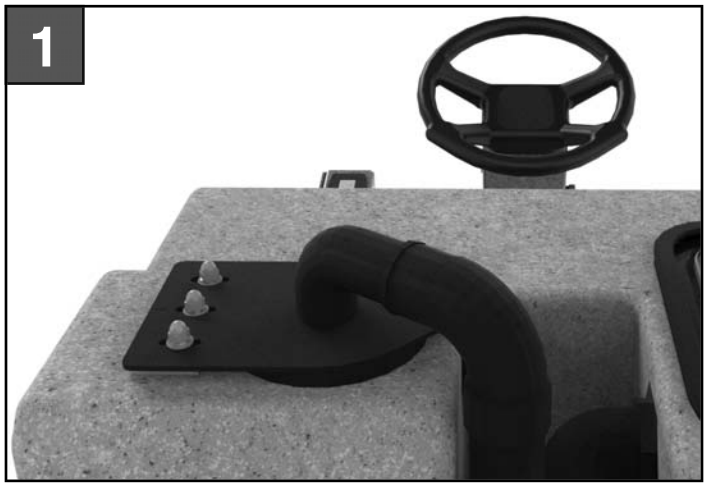

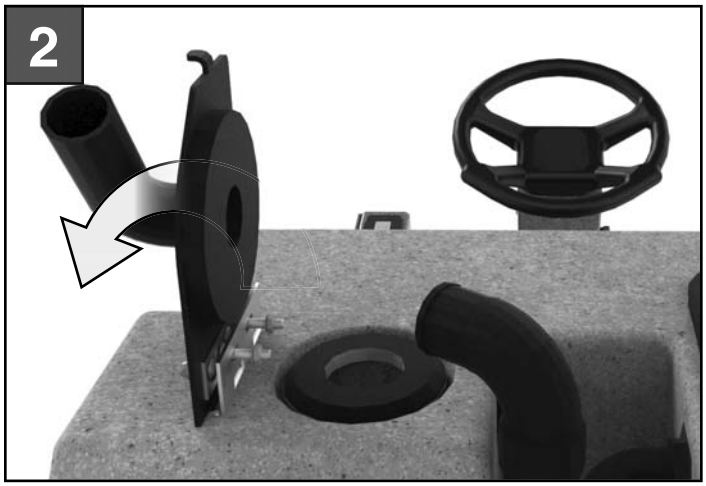

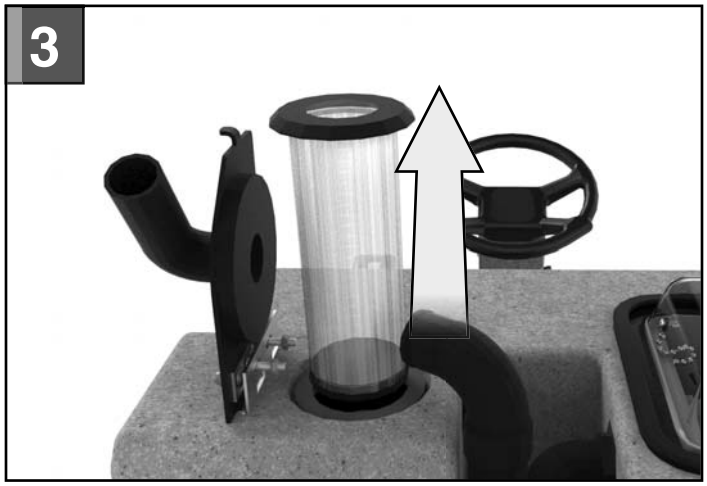

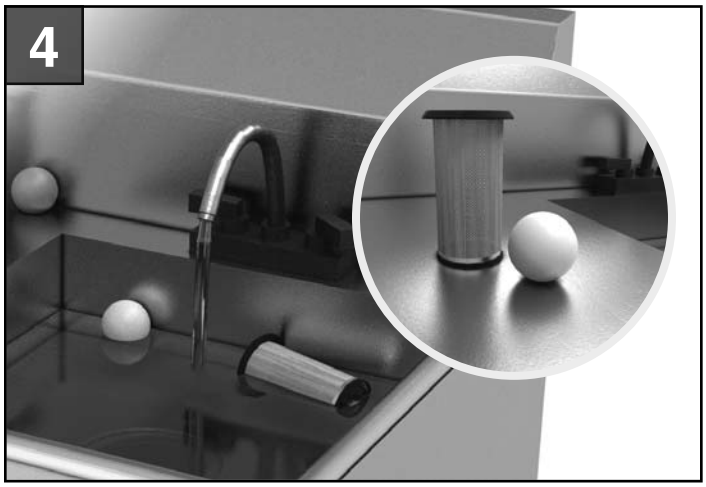

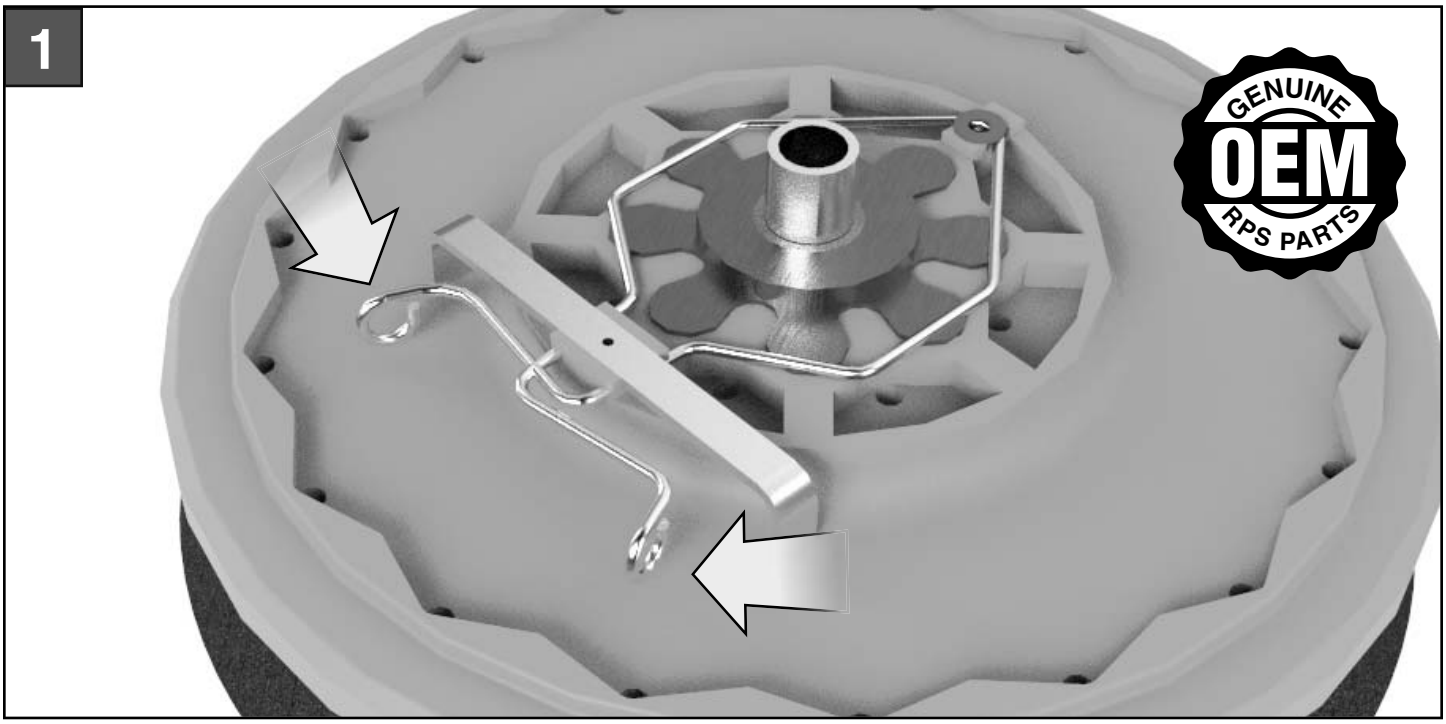

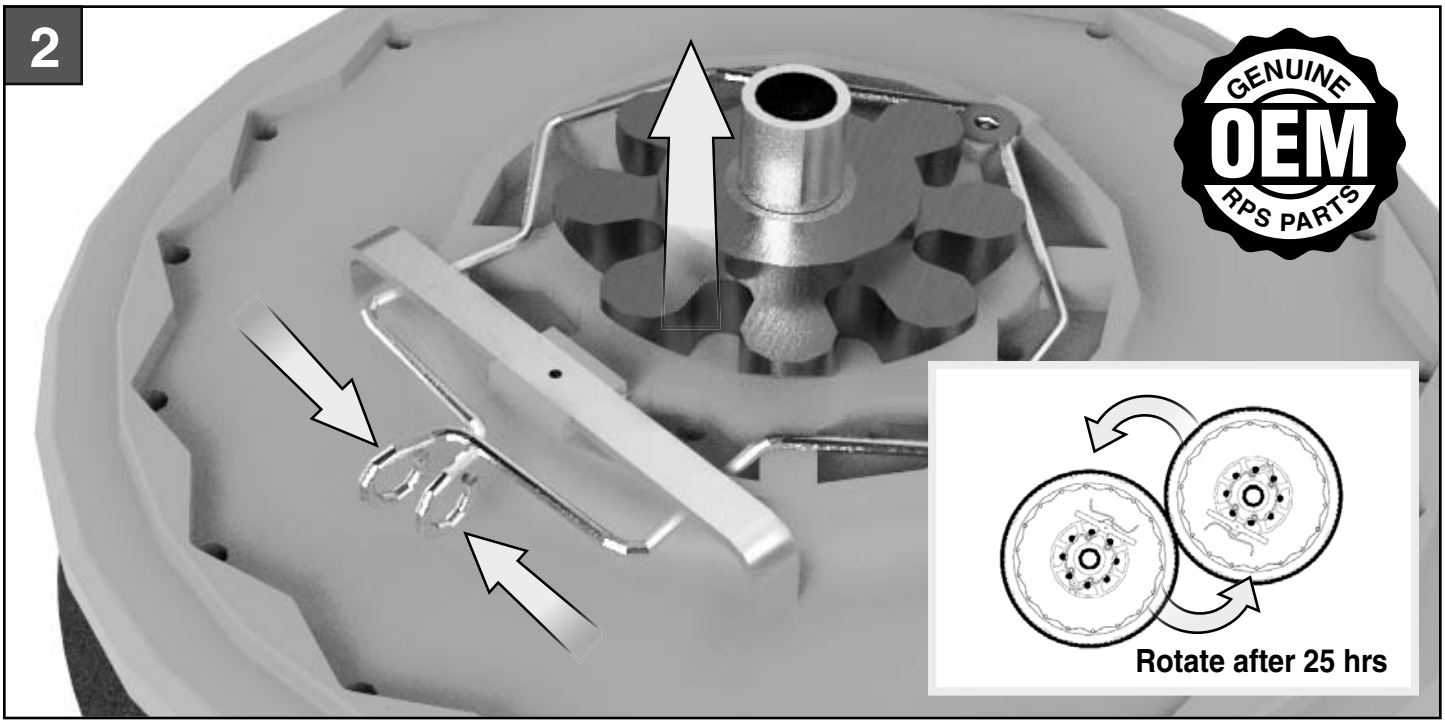

Replace brush when fibers reach 1/4 inch in length

REMOVE CYLINDRICAL BRUSHES

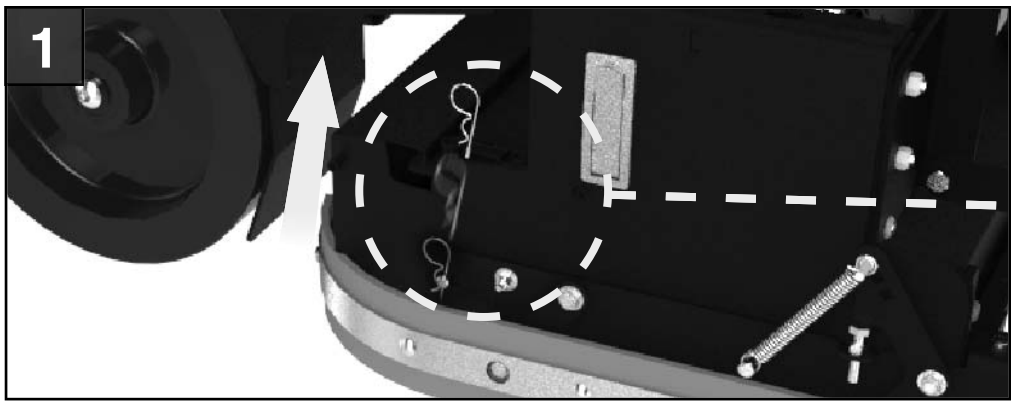

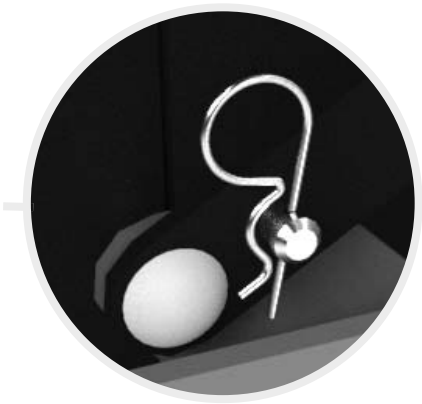

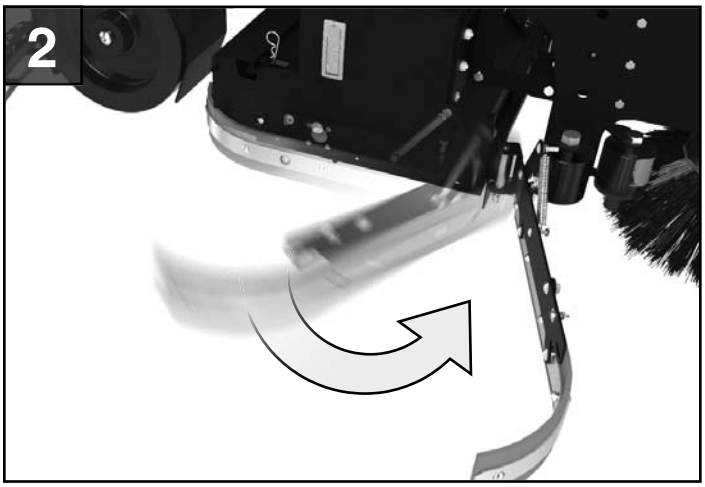

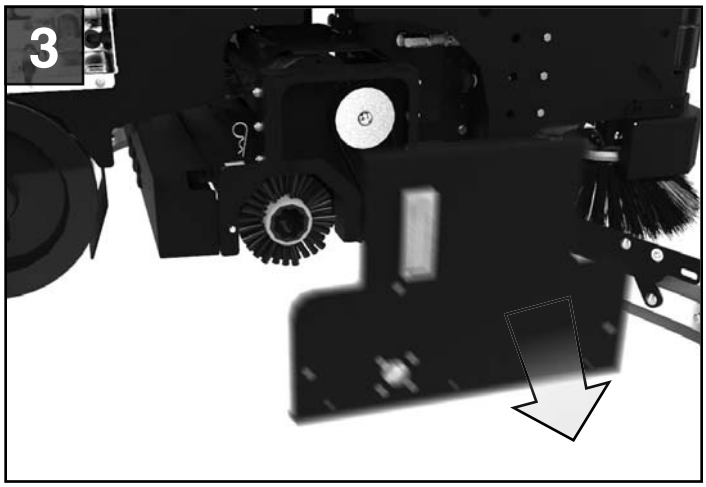

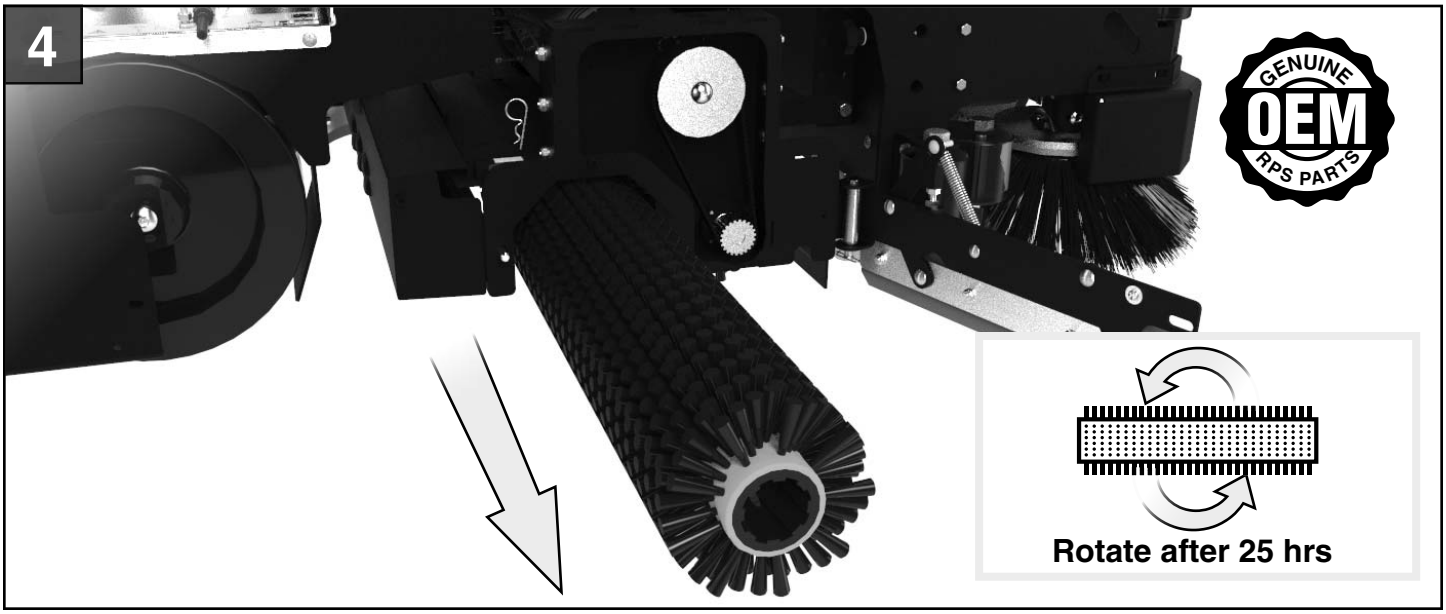

Replace brush when fibers reach 1/4 inch in length

⚠ WARNING

Do not park this machine on ramps or slopes. Always park this machine on a level, hard surface. Do not operate this machine outdoors or on uneven surfaces.

⚠ WARNING

Understand the dynamic braking system before you operate the machine on ramps. Machine may coast.

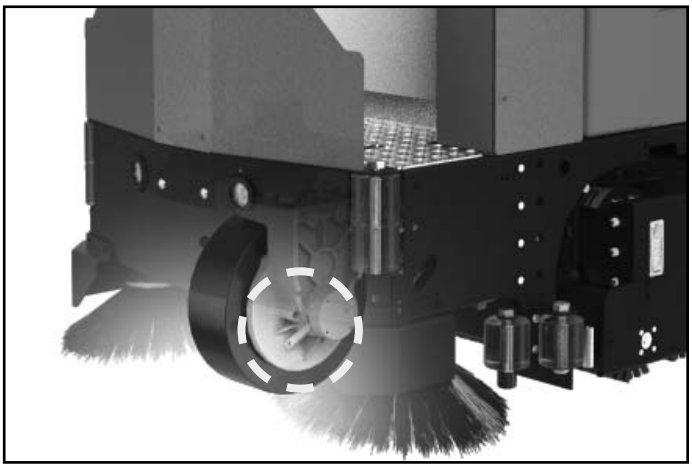

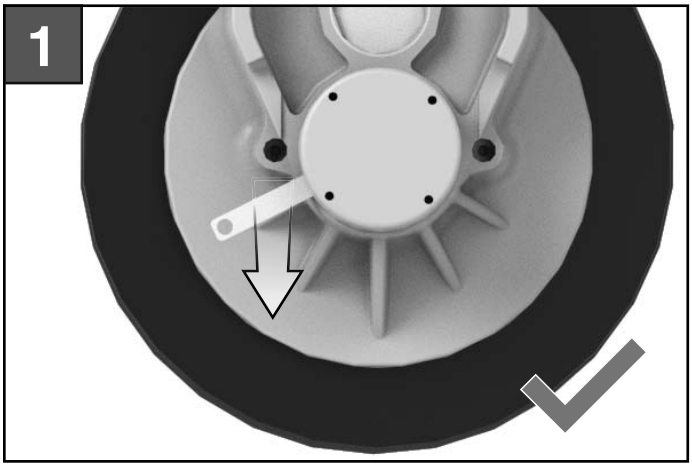

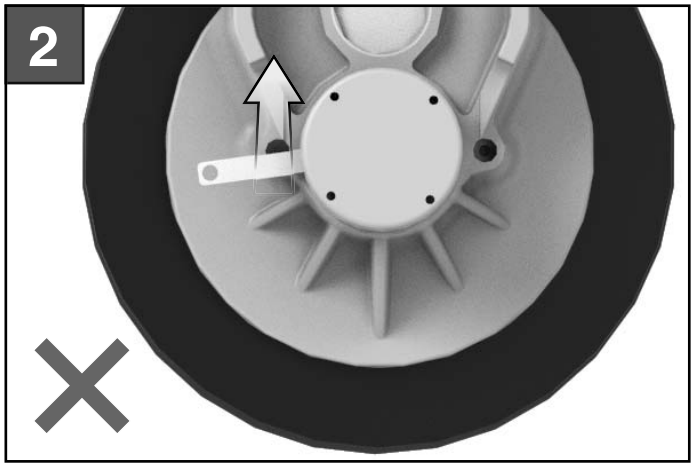

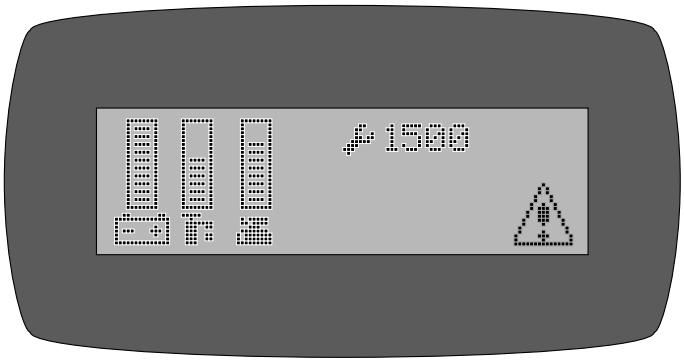

Console / WET / Domestic Chargers:

AC Power IN: 120VAC / 60Hz
DC Power OUT: 36VDC / 25A (ST) - 36A (HD)

Please refer to OEM Charger Operating Instructions for more information.

Onboard / AGM / International Chargers:

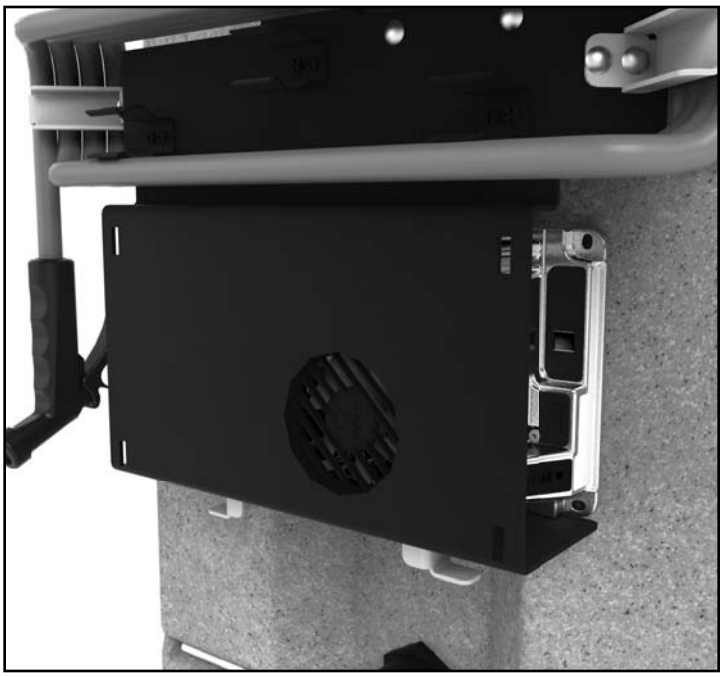

AC Power: 80-270VAC / 50-60Hz
DC Power OUT: 36VDC / 33A

Please refer to OEM Charger Operating Instructions for more information.

COMMON WEAR PARTS

ROUND DISK BRUSHES:

NOTICE

The ## in Disk Column Denotes Desk Pad Size: 15" or 17"

BRUSHES	DISK	LEVEL
Super Grit	##-382SS	Very High
Tough Grit	##-382S	High
Midi Grit	##-382C	Medium
Light Grit	##-382PS	Moderate
Poly	##-382P	Light
Nylon	##-382N	Light
Tampico	##-382T	Light
Pad Driver	##-382D	
Diamond Driver	##-382DD	

ROUND DISK PADS:

NOTICE

The ## in Disk Column Denotes Desk Pad Size: 15" or 17"

DISK PADS	DISK	LEVEL	COLOR
Super Black	##-422BB	Very High	Black
Black	##-422B	High	Black
Brown	##-422BR	High	Brown
Green	##-422G	Medium	Green
Blue	##-422BL	Moderate	Blue
Red	##-422R	Moderate	Red
White	##-422W	Light	White

CYLINDRICAL BRUSHES:

BRUSHES	MODEL 29" CYLINDRICAL	MODEL 33" CYLINDRICAL	LEVEL
Tough Grit	276-697S	316-697S	High
Midi Grit	276-697C	316-697C	Medium
Light Grit	276-697PS	316-697PS	Moderate
Fine Grit	276-697F	316-697F	Light
Nylon	276-697N	316-697N	Light
Tampico	276-697T	316-697T	Light

SQUEEGEE BLADE KITS & COMPLETE SQUEEGEE ASSEMBLIES:

SQUEEGEE SIZE	30" DISK DECKS	34" DISK DECKS	29" CYL. DECKS	33" CYL. DECKS
33" Squeegee	Standard	Optional	Standard	Optional
36" Squeegee	Optional	Standard	Optional	Standard
39" Squeegee	Optional	Optional	Optional	Optional

SQUEEGEE SIZE	LINATEX BLADE KIT	GUM RUBBER BLADE KIT	URETHANE BLADE KIT	COMPLETE SQUEEGEE ASSEMBLIES
33" Squeegee	33-770L	33-770G	33-770U	33-7180
36" Squeegee	36-770L	36-770G	36-770U	36-7180
39" Squeegee	39-770L	39-770G	39-770U	39-7180

SQUEEGEE MATERIAL:	USED FOR:
LINATEX	Provides best wear and tear resistance. Not designed for use with harsh chemicals.
URETHANE	Provides best resistance when dealing with harsh chemicals, oils, fuels, etc.
GUM	Provides best drying performance on rough/grouted floor types by sealing over irregularities. Short life.

NOTICE

Squeegee blade kits include (1) Rear Blade & (1) Front Blade.

NOTICE

Squeegee Assemblies (complete) listed above all come with Linatex blades.

NOTICE

Size is stamped into the top of the painted steel squeegee body on all squeegee's.

P&G CONTROLLER COMMON ERROR CODES

Below are common diagnostic codes and some typical causes / remedies. If the information provided in the "Correction" section does not cure the code, seek technical support from your local authorized RPS Corporation distributor.

Diagnostic Code	Cause	Correction
1501	Parking brake is released or the parking brake coil circuit is open	Check to assure the parking brake is not manually released.
1507	Parking Brake Over Current	Parking brake coil is internally shorted or there is a problem with the wiring to the brake.
2C00-2C02	Battery voltage is low	Charge the batteries with OEM supplied charger.
2F01	Throttle is depressed during power on or a fault with the throttle system	Turn the machine off, assure that the throttle button(s) or throttle pedal are not depressed. Turn the machine back on and if the condition persists, seek technical support from your local authorized RPS distributor.
3101	Brush / Vac Motor - Precharge Fault	This code can be caused by the scrub or vacuum motor(s) having moisture present or contaminated with debris.
3102	Traction Motor - Precharge Fault	This code can be caused by the traction motor having moisture present or being contaminated.
7600	Brush Motor Circuit Open	The controller is not seeing continuity on the brush motor circuit. This can be caused by the wiring to the scrub brush motor(s), corroded connections or a faulty motor.
7601-7603	Brush Motor Circuit Over Current	The brush motor output is exceeding its limit. With the scrubber turned off, check for entrapped debris around the brush driver(s) and assure the brushes turn freely.
7700	Vacuum Motor Circuit Open	The controller is not seeing continuity on the vacuum motor circuit. This can be caused by the wiring to the scrub brush motor(s), corroded connections or a faulty motor.
7701-7703	Vacuum Motor Circuit Over Current	The vacuum motor output is exceeding its limit. This can be caused by a faulty vacuum motor(s) or damaged vacuum motor wiring.
1E03	Charger / Seat Switch – Charger is plugged in or operator is not on the seat of ride on equipment.	On board charger is plugged into the wall outlet. Off board charger is plugged into charging port. The switch at the charger plug for an external charger is out of adjustment. (Operator is not present on seat GTR and EX machines Prior to Serial Number 100xxx)
7500	LCD Communication Error	The LCD lost communication to the controller. Check the 6 wire harness between the LCD module and it's connections.
7801-7802	Traction Motor Over Current	The traction motor output is exceeding its limit. Check to assure the parking brake is releasing when the throttle is engaged. Assure all wheels that contact the floor turn freely.
7804	Boost Mode	The code 7804 indicate the controller is in Boost Mode and considered normal under hard acceleration or when climbing a hill.
7900	Emergency Stop Activated	The emergency stop is activated. If the machine is not equipped with an emergency stop switch typically the LCD module has failed.