OPERATOR MANUAL

SDS50PC-O

Super Duty Oscillating Scrubber

1800 100 150
sales@conquesteg.com
conquesteg.com

CONQUEST
With you, all the way

INTRODUCTION

This manual is furnished with each new machine. This manual will allow the Operator to get the best performance out of your RPS manufactured Scrubber-Drier, Sweeper, Burnisher, or Orbital Scrubber. Read this manual thoroughly before operating or servicing the machine.

This machine will provide excellent performance, but the best results will be obtained at the most minimum costs if:

- The machine is regularly maintained - per the machine Preventative Maintenance.
- The machine is operated with reasonable care and caution.
- The machine is maintained with manufacturer supplied parts.

NOTE: The serial number of your machine is located on the back of the handlebars.

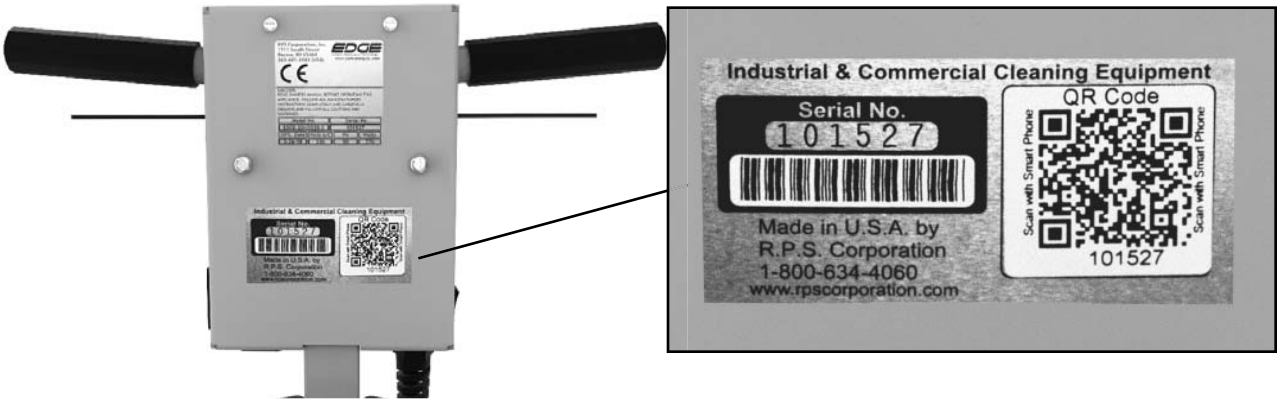

AS OUR POLICY IS ONE OF CONSTANT IMPROVEMENT - ALL INFORMATION AND SPECIFICATIONS ARE SUBJECT TO CHANGE WITHOUT NOTICE.

TABLE OF CONTENTS

Table of Contents 3

Safety Messages 4

Scrub 6

Scrub With Water 7

Change Pad 8

Weights 9

Vac 10

Moving 11

Machine Operation 12

Motor Information 13

Common Wear Parts 14

EDGE Pads and Screens: 14
EDGE Diamonds For Polishing Marble/Terrazzo: 14

You will see three kinds of safety reminders in this manual:

⚠ WARNING

WARNING indicates a potentially hazardous situation which, if not avoided, could result in death or serious injury.

⚠ CAUTION

CAUTION indicates a potentially hazardous situation which, if not avoided, could result in minor or moderate injury or damage to this machine or nearby objects. CAUTION also can be used to alert against unsafe practices.

NOTICE

NOTICE indicates information considered important, but not hazard-related. This safety message may be related to property damage or warranty warnings.

Your safety, and that of others, is very important. Operating this machine safely is an important responsibility.

DO NOT OPERATE THIS MACHINE:

- Unless you are trained and authorized to do so by an RPS authorized and certified distributor
- Unless you have read and understood this complete Operator's Manual
- On surfaces with greater than an 2% / 3.49° grade at any time
- In water depth more than 0.125" *(3.175mm)*

WHEN OPERATING THIS MACHINE:

- Remove loose objects from the floor that could be projected from the oscillating Pad
- Keep your hands and feet away from the oscillating Pad
- Do not operate this machine where flammable liquids are present
- Use caution when maneuvering close to walls
- Use PPE

BEFORE LEAVING THE MACHINE:

- Turn the machine *OFF* and unplug the power cord

BEFORE SERVICING THE MACHINE:

- Turn the machine *OFF* and unplug the power cord

⚠ WARNING

Do not operate this machine around fuels, solvents, flammable floor finishes, thinners, wood dust or any flammable materials. Cigarette lighters, pilot lights, electrical sparks and all other sources of ignition should be extinguished or avoided. Work areas should be well ventilated.

⚠ WARNING

Always wear safety goggles when operating this machine to avoid eye injury from debris projected from the oscillating Pad.

⚠ WARNING

To avoid electrical shock, do not use this machine if it has been rained on or sprayed with water.

⚠ WARNING

To avoid electrical shock, unplug the power cord before adjusting the Handlebar height or replacing the Pad.

⚠ WARNING

Always turn off this machine and unplug the power cord before leaving it unattended. Do not allow untrained persons to operate this machine.

⚠ WARNING

Always wear a dust mask when operating this machine to avoid inhaling dust created by the oscillating Pad. Inhaling dust created by this machine can cause serious respiratory injury.

⚠ WARNING

To avoid electrical shock, do not pull on the power cord to move the machine or unplug the power cord from the electrical outlet.

⚠ WARNING

Do not remove, paint over or destroy warning decals. If warning decals become damaged, call 1-262-681-3583 for free replacements.

⚠ WARNING

To avoid electrical shock, do not operate this machine over electrical floor outlets.

⚠ WARNING

Dress safely. Keep hands, feet and loose clothing away from moving parts on this machine.

⚠ WARNING

To avoid electrical shock, always keep the power cord clear of the oscillating Pad and in good condition. Always lift the power cord over the machine.

⚠ WARNING

Never operate this machine under the influence of alcohol or drugs. Do not allow anyone under the age of 18 to operate this machine.

⚠ WARNING

This machine weighs over 130 pounds. Do not attempt to lift this machine alone. Two persons are required to lift this machine.

⚠ WARNING

Never sand wood decks. Due to uneven surfaces this could lead to damage to the machine as well as some pressure treated wood found in decking contains arsenic, which, when sanded, will create hazardous dust.

⚠ CAUTION

To avoid personal injury and/or damage to this machine, the persons lifting the machine should grasp the lifting bars on the base of the machine with one hand, and the handle with the other.

⚠ CAUTION

Always unplug the power cord and wrap the cord on the cord wrap and handle before attempting to transport this machine.

⚠ CAUTION

Always unplug the power cord before changing the pad.

⚠ CAUTION

Always raise and lock the handle into position before attempting to lift this machine. Always leave the pad on the machine before transporting the machine to avoid damage to the pad face.

⚠ CAUTION

Tilt the machine onto its wheels and transport it slowly and carefully. Do not operate this machine if any parts have been damaged or removed.

⚠ CAUTION

Alterations to this machine may result in personal injury or property damage, and WILL void the warranty.

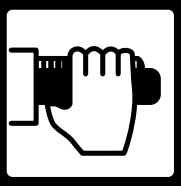

SCRUB

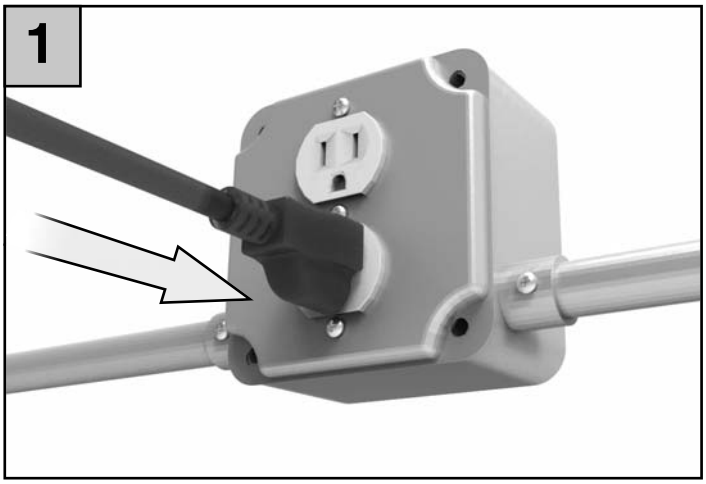

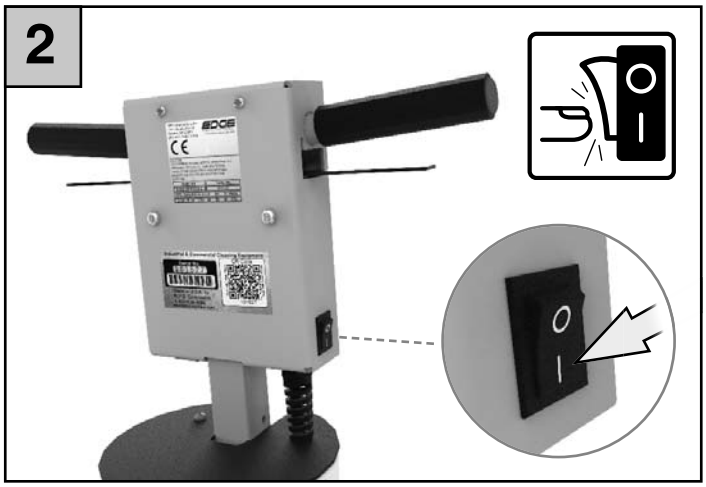

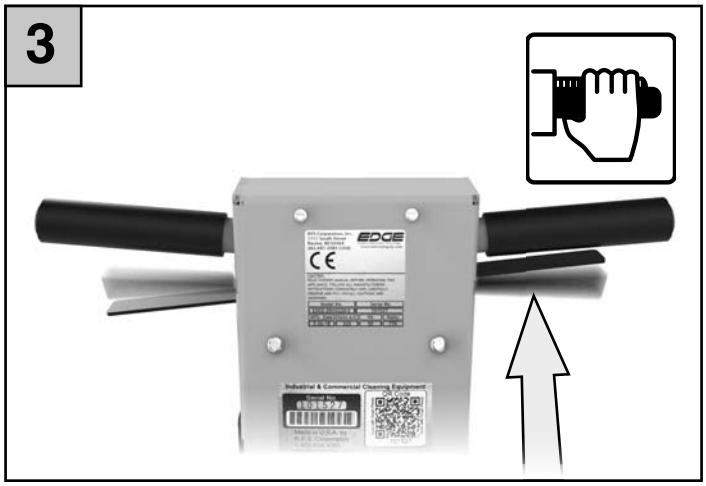

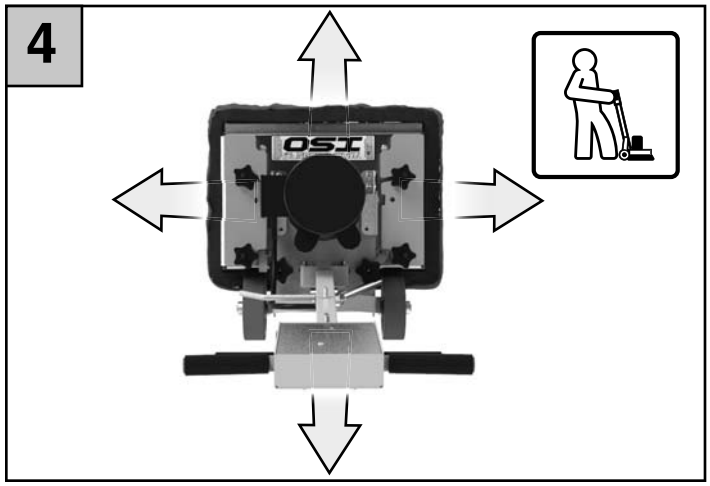

SCRUB WITH WATER

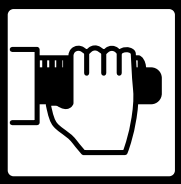

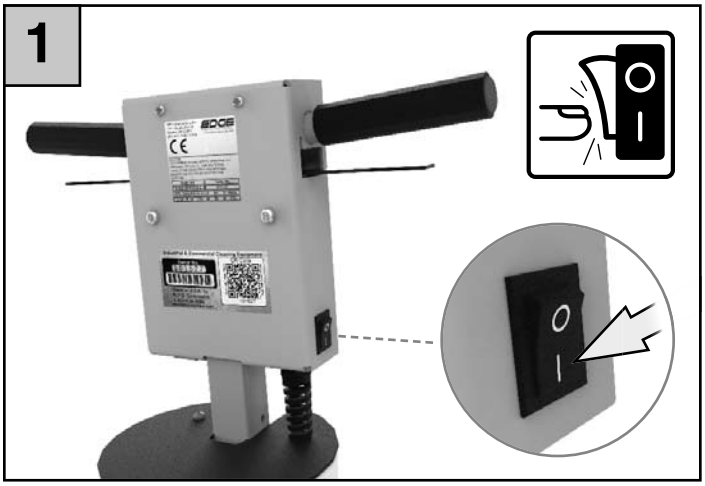

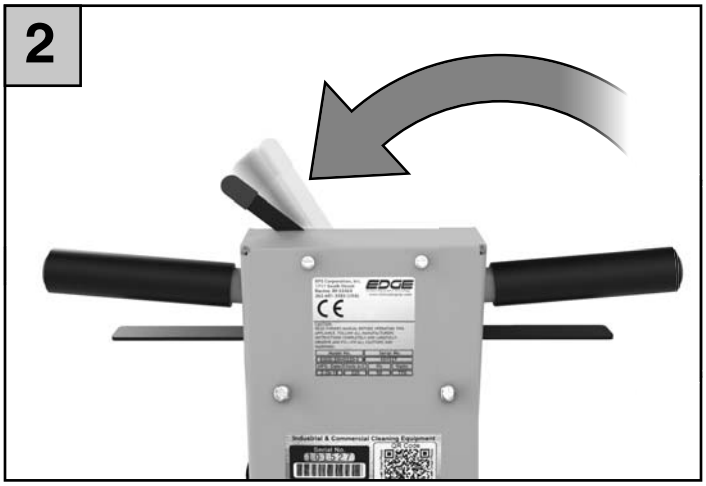

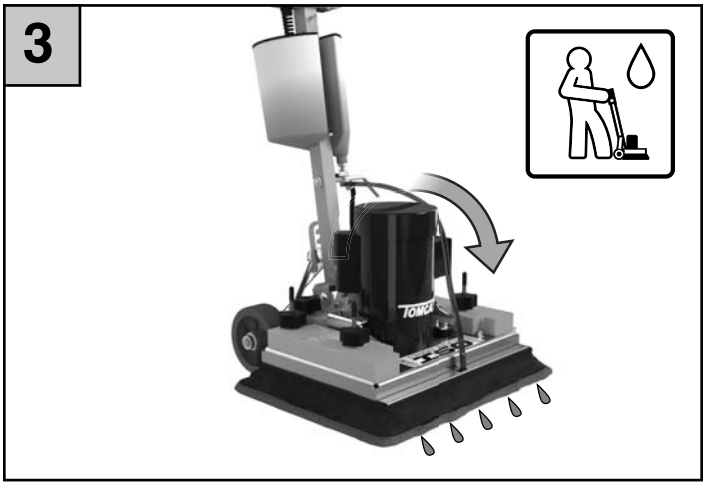

CHANGE PAD

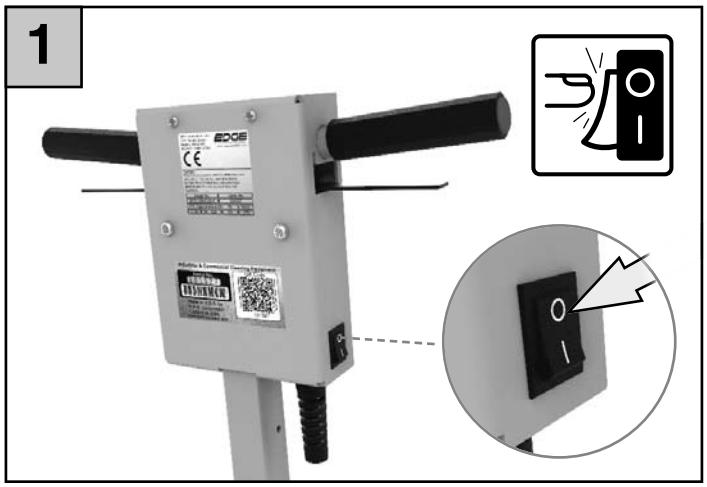

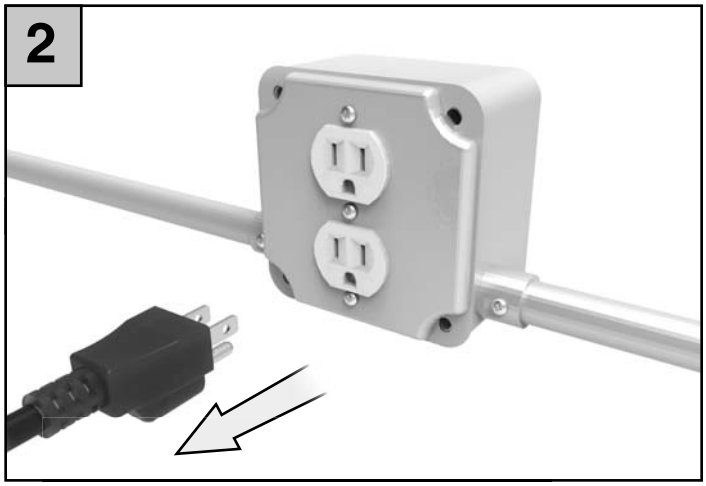

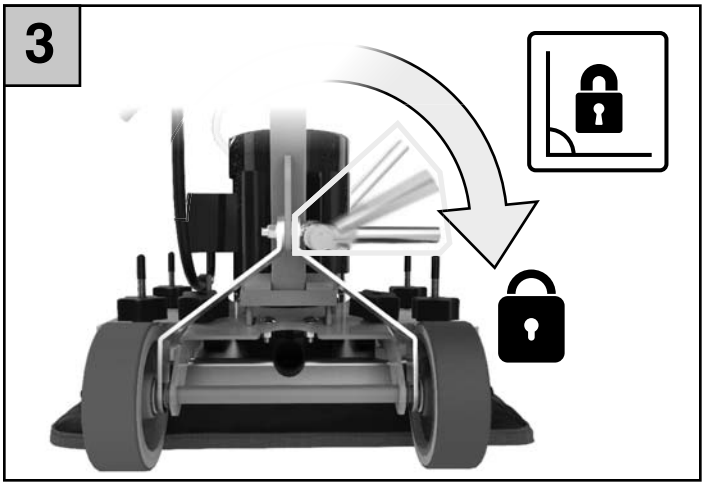

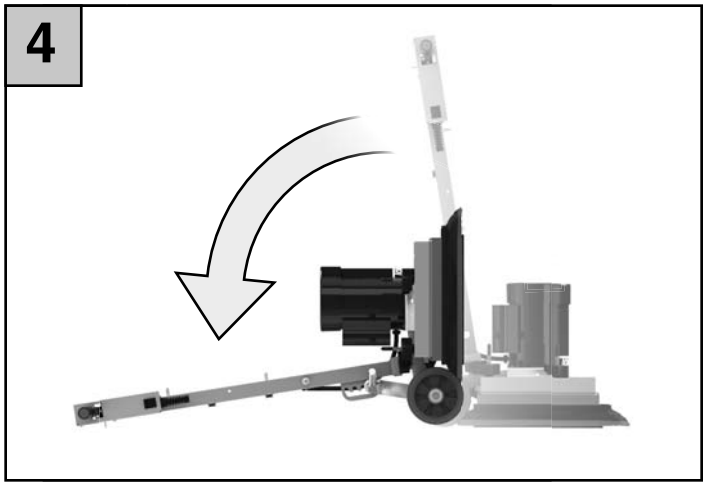

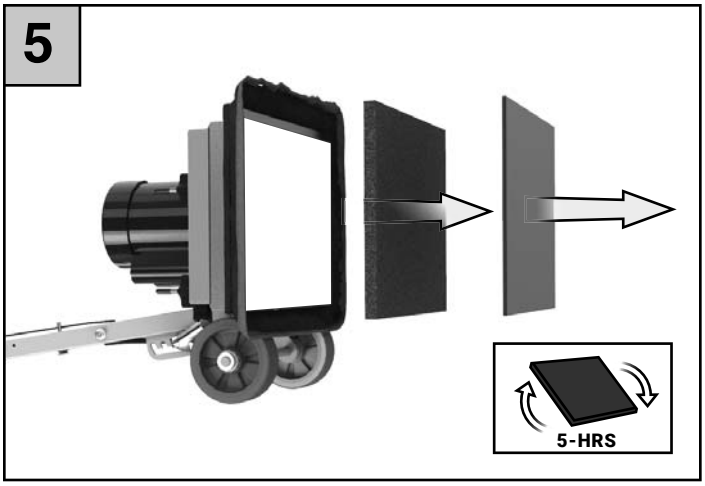

WEIGHTS

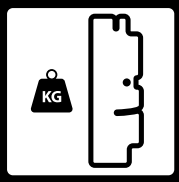
KG

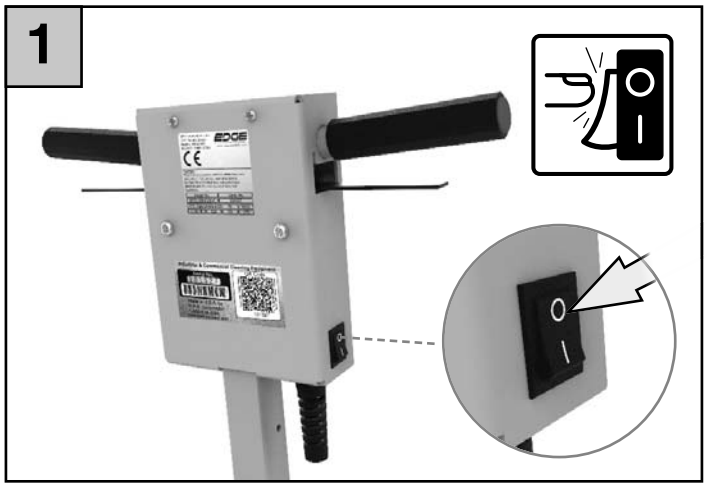
1

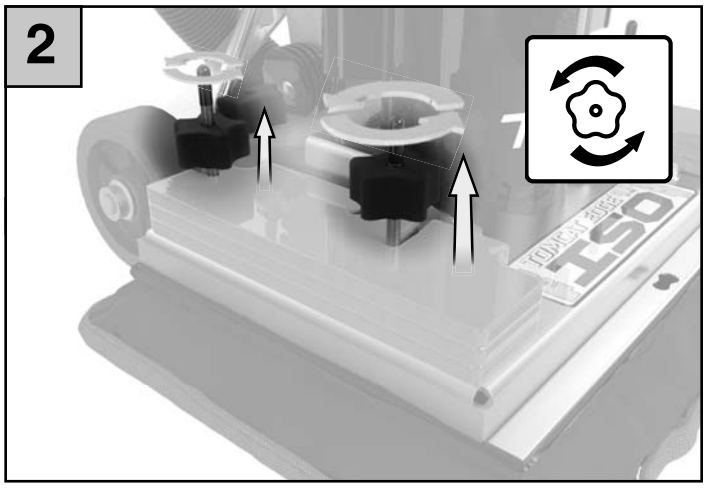
2

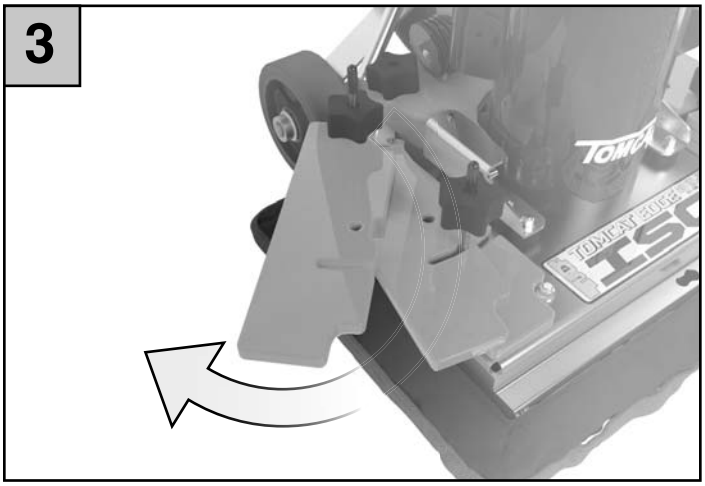
3

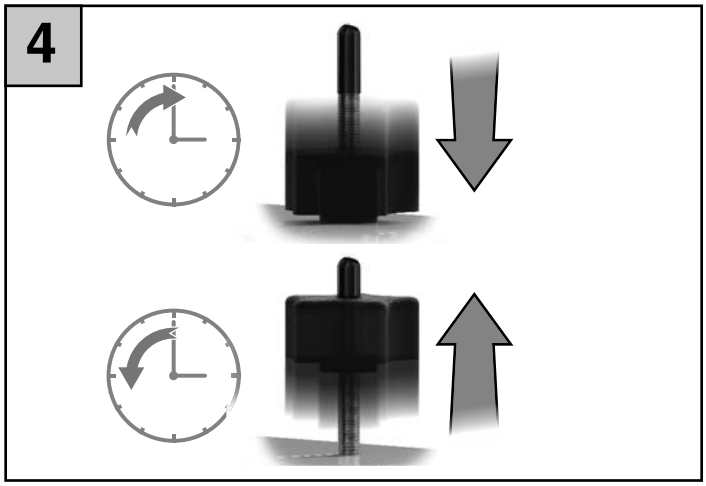
4

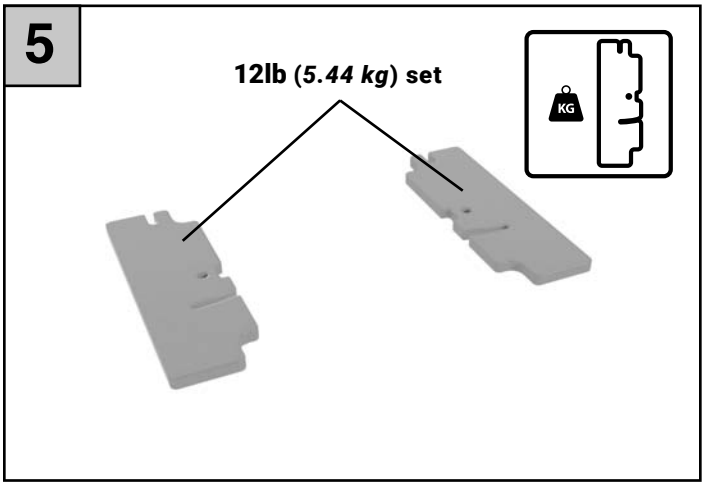
5
12lb (5.44 kg) set
KG

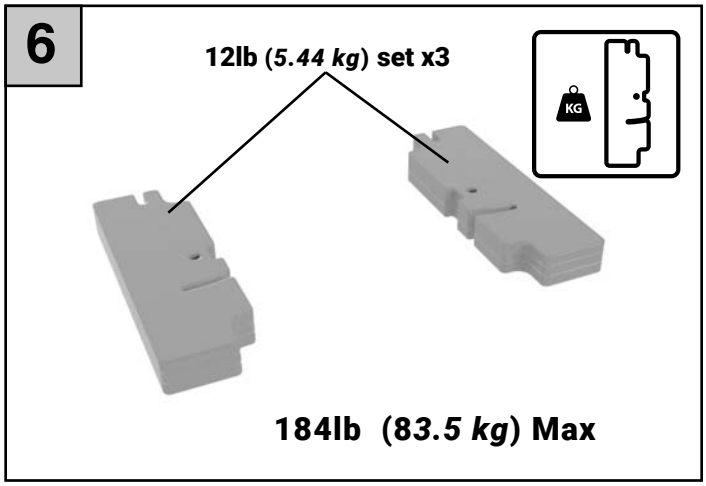
6
12lb (5.44 kg) set x3
KG
184lb (83.5 kg) Max

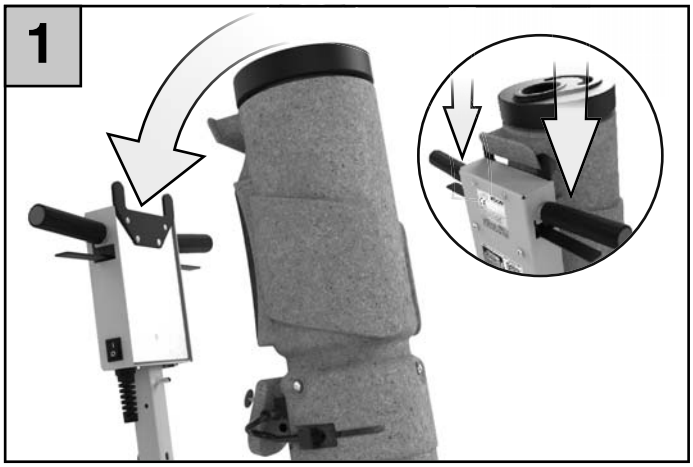
1

2

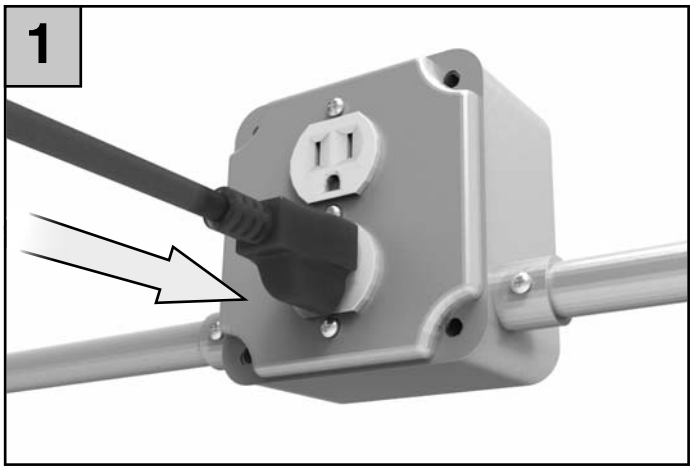
1

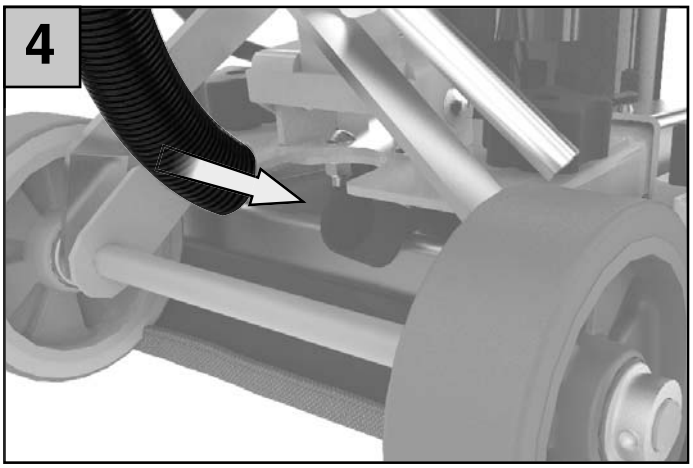
4

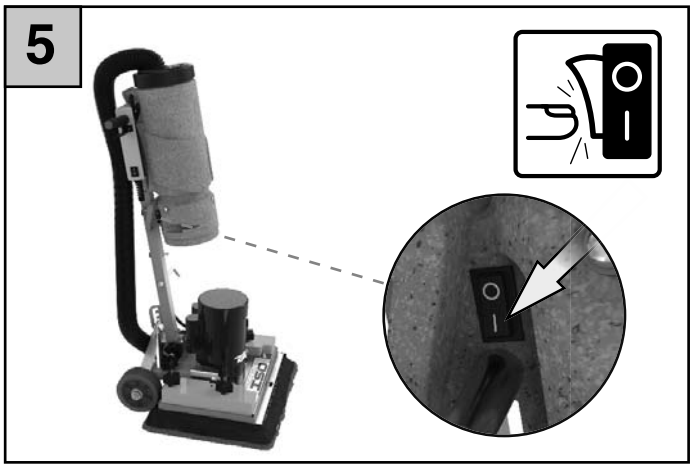
5

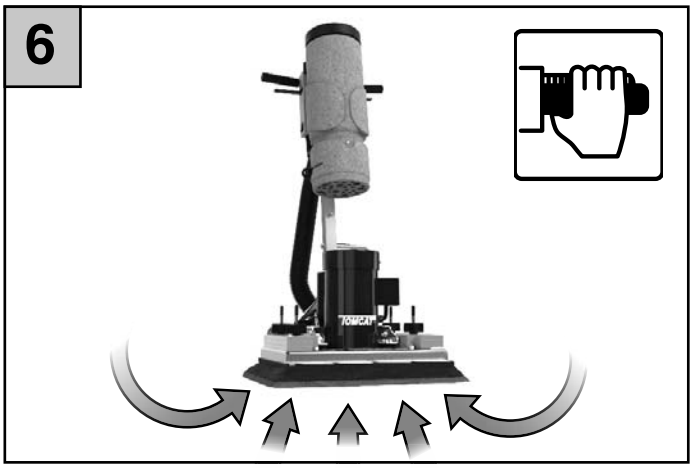
6

MOVING

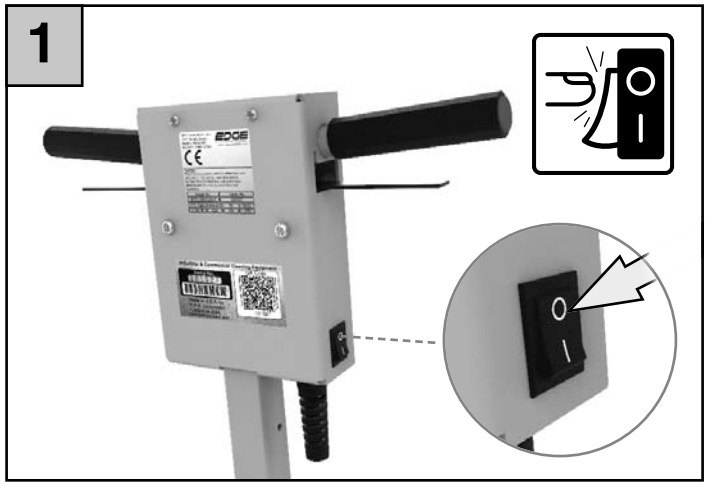

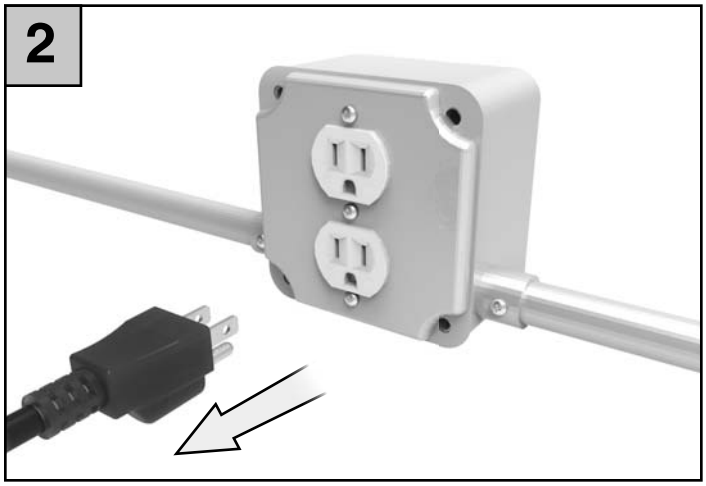

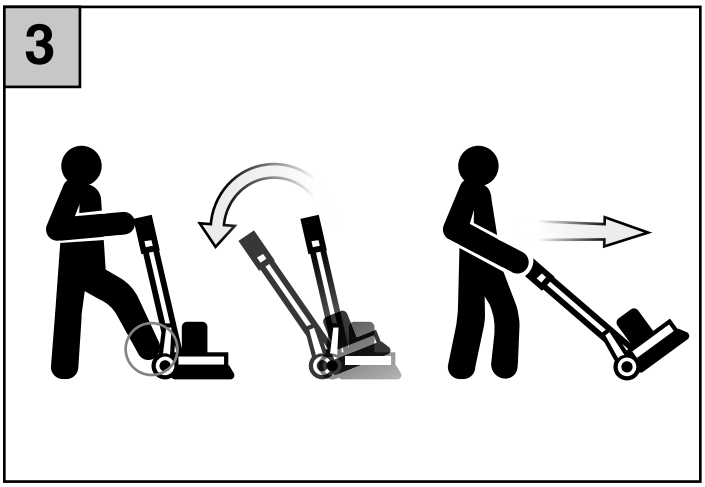

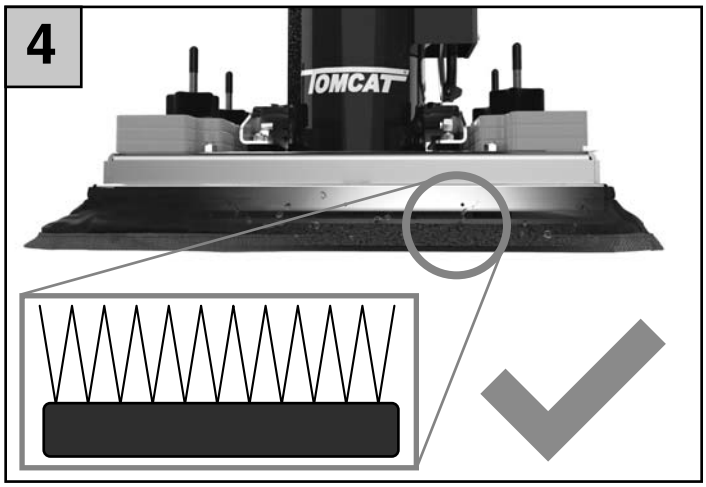

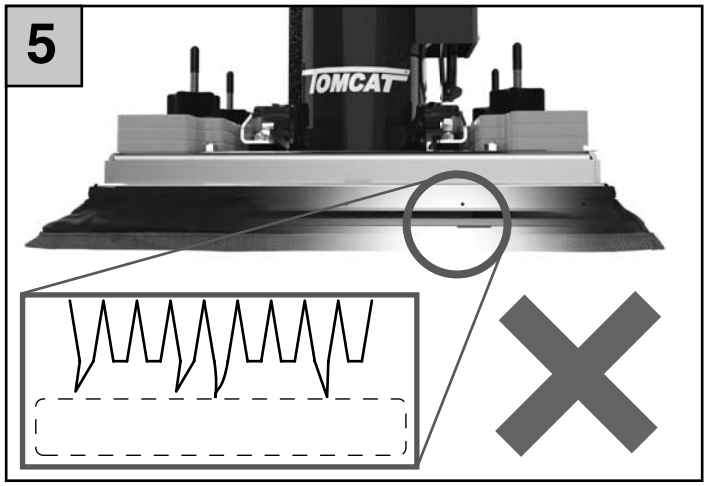

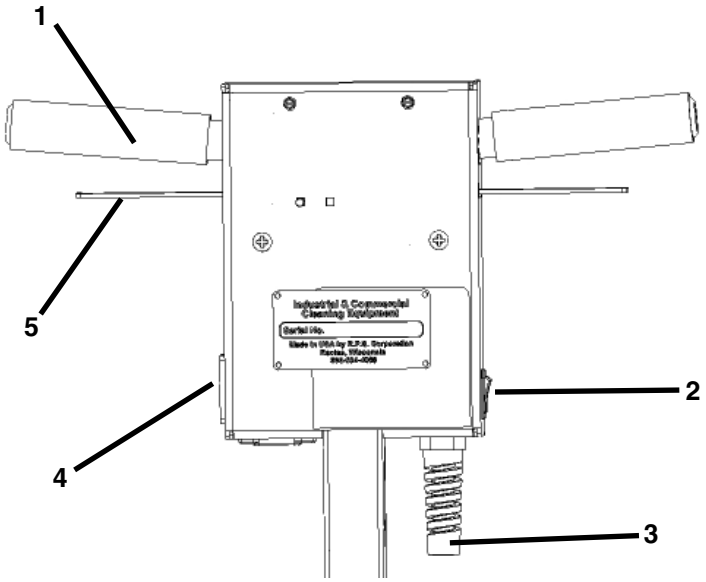

1. **HANDLEBAR:** Foam padded handlebars provide ergonomic support

2. **MAIN POWER SWITCH (OPTIONAL):** Turns the machine *ON* and *OFF*

3. **POWER CORD:** 50 ft cord

4. **HOUR METER (OPTIONAL):** Shows the total amount of hours that the machine has been used

5. **HANDLEBAR TRIGGER:** Depressing the trigger activates the Scrubdeck motor

6. **SWIVEL CORD WRAP:** Rotate the cord wrap to allow for easy coiling and uncoiling of the Power cord

7. **SLOTTED WEIGHT PLATES (OPTIONAL):** Add/remove weight plates for different Pad and application usage

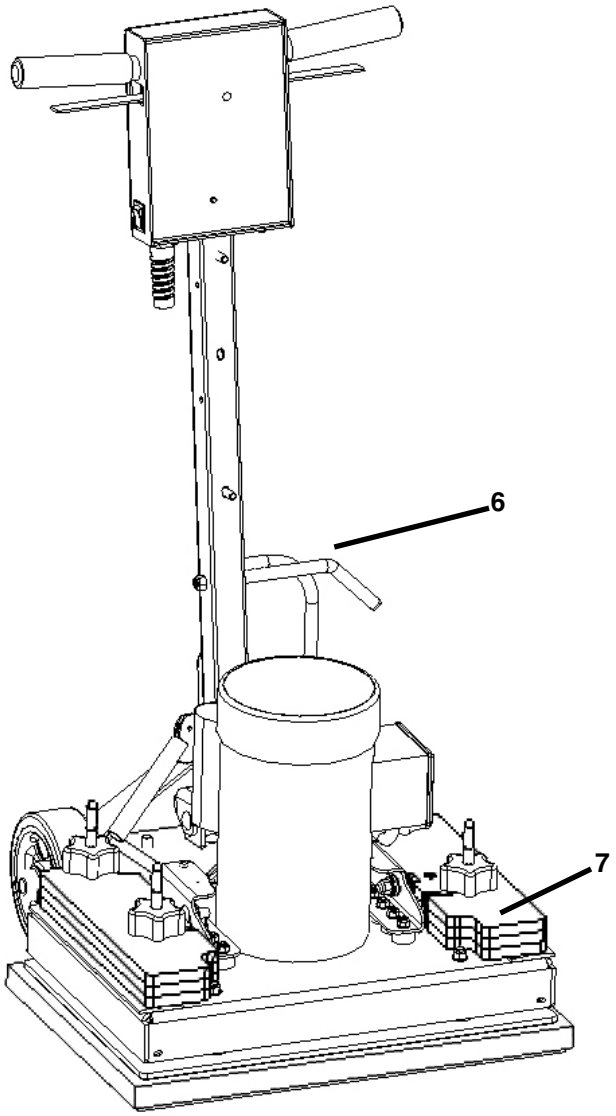

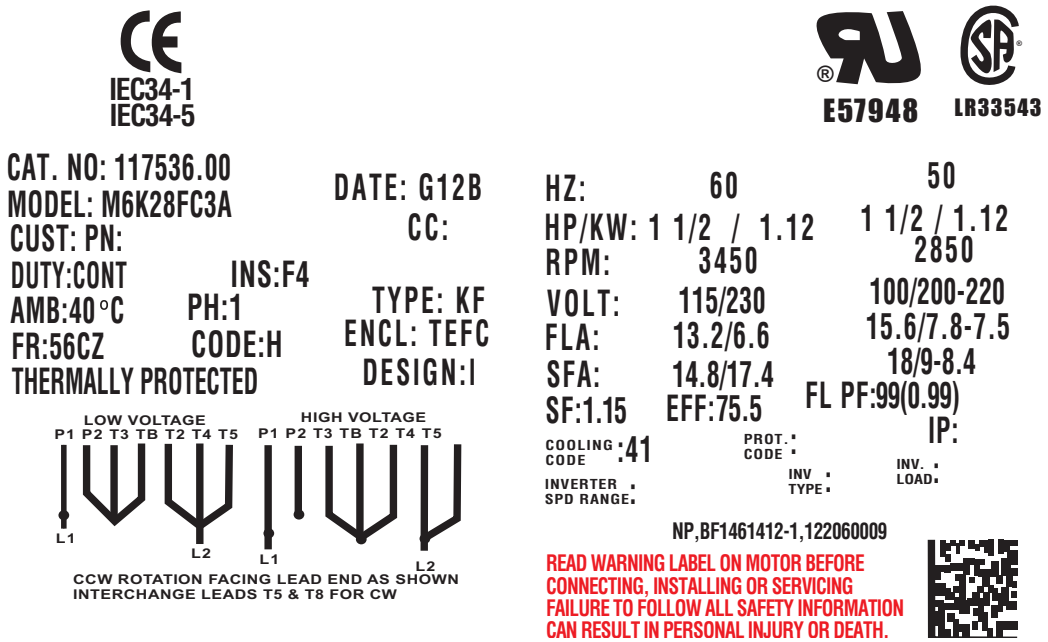

There is a sticker with the above information on the motor of your EDGE Stick machine unit. Below are explanations for the units of measurement.

FLA = Full Load Ampere Rating
Line current drawn by motor while operating under full load at supply voltage indicated. On dual voltage motors, higher voltage amps are one-half lower voltage amps.

SFA = Service Factor Amps
Current drawn by the motor when operated at service factor load. Unless motor is operated extensively at service factor load (not recommended), use full load current when selecting circuit protection.

SF = Service Factor
The service factor shown on the motor nameplate indicates the amount of continuous overload the motor can be subjected to, under nameplate conditions, without damaging the motor. When the voltage and frequency are at the same values as shown on the motor nameplate, the motor may be overloaded up to the horsepower indicated by multiplying the rated horsepower by the service factor. When operated at service factor load, the motor may have an efficiency, power factor, and speed slightly different from those shown on the nameplate.

A motor designed to operate at its nameplate horsepower rating has a service factor of 1.0. This means the motor can operate at 100% of its rated horsepower. Some applications may require a motor to exceed the rated horsepower. In these cases a motor with a service factor of 1.15 can be specified. The service factor is a multiplier that may be applied to the rated power. A 1.15 service factor motor can be operated 15% higher than the motor's nameplate horsepower. The 30 HP motor with a 1.15 service factor, for example can be operated at 34.5 HP. It should be noted that any motor operating continuously at a service factor greater than 1 will have a reduced life expectancy compared to operating it at its rated horsepower. In addition, performance characteristics, such as full load RPM and full load current, will be affected.

EF = Efficiency Factor
AC motor efficiency is expressed as a percentage. It is an indication of how much input electrical energy is converted to output mechanical energy. The nominal efficiency of this motor is 93.6%. The higher the percentage the more efficiently the motor converts the incoming electrical power to mechanical horsepower. A 30 HP motor with a 93.6% efficiency would consume less energy than a 30 HP motor with an efficiency rating of 83%. This can mean a significant savings in energy cost. Lower operating temperature, longer life, and lower noise levels are typical benefits of high efficiency motors.

FLPF = Full Load Power Factor
The ratio of real or true power and the apparent power that is supplied [PF=P(watts)/S(va)]

COMMON WEAR PARTS

EDGE PADS AND SCREENS:

DESCRIPTION	20"×14" SCRUBDECK	13"×19"
White Pad	EDGE-4005	N/A
Red Pad	EDGE-4004	N/A
Blue Pad	EDGE-4003	N/A
Green Pad	EDGE-4002	N/A
Black Pad	EDGE-4001	N/A
White Driver Pad	EDGE-4025	EDGE-4019
60 Grit Sand Screen	EDGE-4026	EDGE-4020
80 Grit Sand Screen	EDGE-4027	EDGE-4021
100 Grit Sand Screen	EDGE-4028	EDGE-4022
120 Grit Sand Screen	EDGE-4029	EDGE-4023
150 Grit Sand Screen	EDGE-4030	EDGE-4024
20 Grit Sand Paper	EDGE-4031	N/A
36 Grit Sand Paper	EDGE-4032	N/A
60 Grit Sand Paper	EDGE-4033	N/A
80 Grit Sand Paper	EDGE-4034	N/A
100 Grit Sand Paper	EDGE-4035	N/A
100 Grit Diamond Polishing Pad	EDGE-4012	N/A
400 Grit Diamond Polishing Pad	EDGE-4013	N/A
800 Grit Diamond Polishing Pad	EDGE-4014	N/A
1500 Grit Diamond Polishing Pad	EDGE-4015	N/A
3000 Grit Diamond Polishing Pad	EDGE-4016	N/A
6000 Grit Diamond Polishing Pad	EDGE-4070	N/A
Tile/Grout Renovator Pad	EDGE-4018	N/A
Microfiber Pad	EDGE-4036	N/A
Abrader Plate	N/A	EDGE-4011
Dominator HD Strip Pad	EDGE-4006	N/A
Maroon ECO Prep Pad	EDGE-4007	N/A
Remover Burnishing Pad	EDGE-4008	N/A
Porko Burnishing Pad	EDGE-4017	N/A
Velcro Pad	300-4023	N/A