OPERATOR MANUAL

HDS75

Heavy Duty Walk-Behind Industrial Scrubber

1800 100 150
sales@conquesteg.com
conquesteg.com

CONQUEST
With you, all the way

Scan QR code to access your
HDS75 (Previously known as MXL)
Floor Scrubber Operator video

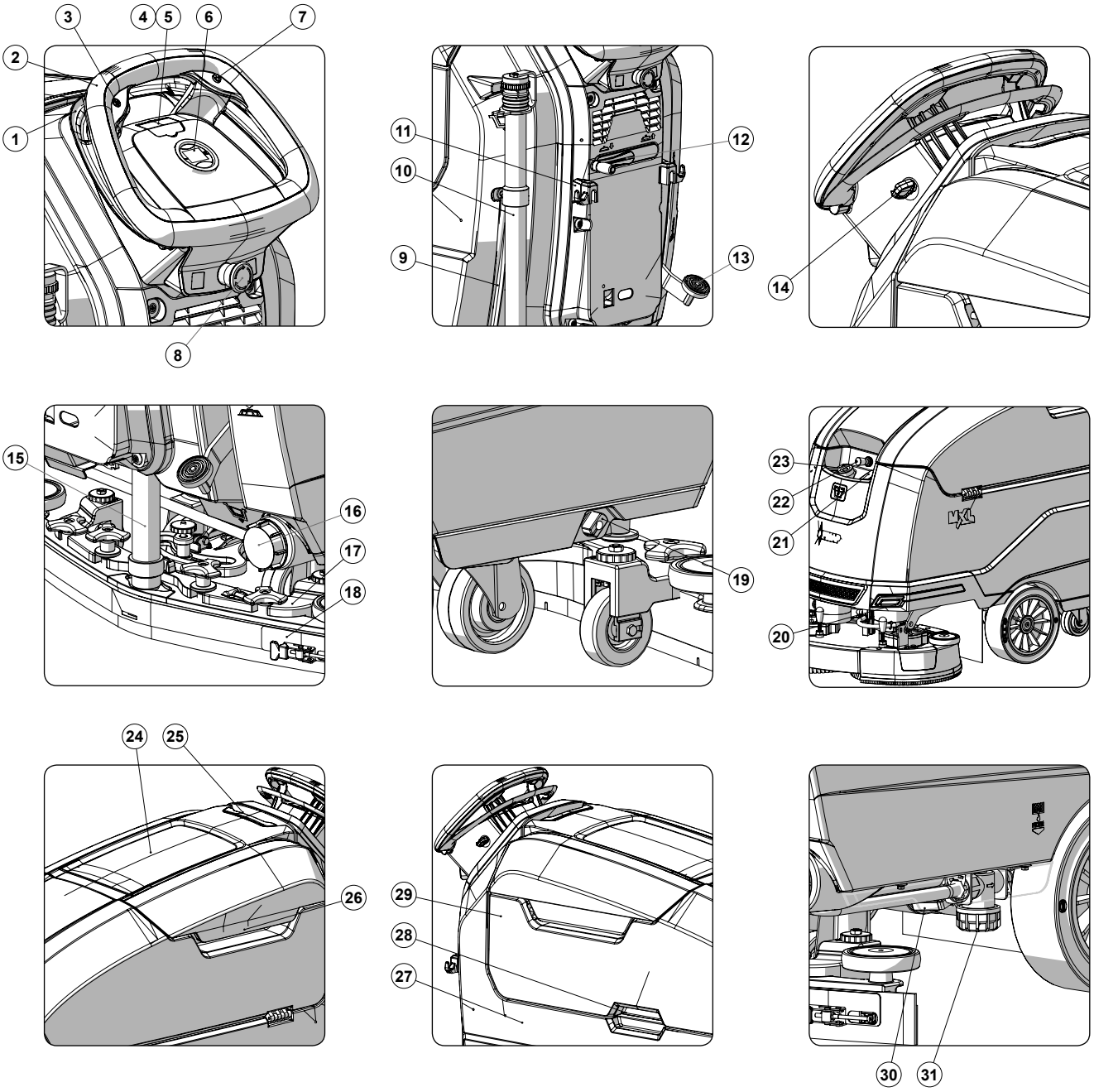

MAIN MACHINE COMPONENTS

The machine's main components are the following:

1. Dead man's lever.
2. Control handlebars.
3. ECO-MODE button.
4. Cover for FFM “FIMAP FLEET MANAGEMENT” SOS button (Optional).
5. FFM “FIMAP FLEET MANAGEMENT” SOS button (Optional).
6. Control display.
7. Reverse control button.
8. Battery disconnect button.
9. Solution tank level indicator.
10. Recovery tank drainage hose.
11. Support hook for recovery tank drainage tube.
12. Squeegee body control lever.
13. Brush head control pedal.
14. Main key switch.
15. Vacuum tube.
16. Solution tank drainage cap.
17. Squeegee body support.
18. Squeegee body.
19. Water flow adjustment tap.
20. Front headlights (optional).
21. Solution tank filler cap/measuring inlet.
22. Cover cap for FFF “FIMAP FAST FILL” quick coupling kit (optional).
23. Solution tank filler tube cap.
24. Accessory compartment door.
25. Control handle for accessory compartment door.
26. Recovery tank cover lifting handle.
27. Solution tank.
28. Recovery tank lifting handle.
29. Recovery tank.
30. Electric brake control lever
31. Detergent solution filter.

CONTENTS

MAIN MACHINE COMPONENTS 3
CONTENTS 4
GENERAL SAFETY REGULATIONS 6
SYMBOLS USED IN THE MANUAL 6
PURPOSE AND CONTENT OF THE MANUAL 7
STORING THE USE AND MAINTENANCE MANUAL 7
ON CONSIGNMENT OF THE MACHINE 7
INTRODUCTORY COMMENT 7
IDENTIFICATION DATA 7
TECHNICAL DESCRIPTION 7
INTENDED USE 7
SAFETY 7
REGULATIONS 7
TARGET GROUP 7
SERIAL NUMBER PLATE 8
TECHNICAL DATA 8
DISPOSAL 9
SYMBOLS USED ON THE MACHINE 10
SYMBOLS PRESENT ON THE REGISTRATION PLATE 10
SYMBOLS PRINTED ON THE MACHINE 10
LABELS USED ON THE MACHINE 10
PREPARATION OF MACHINE 11
HANDLING THE PACKAGED MACHINE 11
HOW TO UNPACK THE MACHINE 12
HOW TO MOVE THE MACHINE 12
MACHINE SAFETY 12
TYPE OF BATTERY TO BE USED 13
BATTERY MAINTENANCE AND DISPOSAL 13
INSERTING THE BATTERIES IN THE MACHINE 13
RECHARGING THE BATTERIES 13
ASSEMBLING THE BRUSH (SCRUBBING VERSION) 14
ASSEMBLING THE BRUSH (SWEEPING VERSION) 14
ASSEMBLING THE SQUEEGEE BODY 15
INSERTING WATER SYSTEM FILTER 15

FILLING THE SOLUTION TANK WITH WATER 15
DETERGENT SOLUTION 15
PREPARING TO WORK 16
STARTING WORK 17
HOUR METER 17
BATTERY CHARGE LEVEL INDICATOR 17
SCRUBBING WITH DRYING 18
SCRUBBING WITHOUT DRYING 18
DRYING 18
ADJUSTMENT OF THE DETERGENT SOLUTION FLOW 18
REGULATING THE FORWARD SPEED 19
REVERSE GEAR 19
BATTERY DISCONNECT SWITCH 19
ECO MODE 19
RECOVERY TANK OVERFLOW 19
ALARM SCREEN 20
AT THE END OF THE WORK 20
RECOMMENDED MAINTENANCE OPERATIONS 21
CLEANING THE SQUEEGEE BODY 22
CLEANING THE DEBRIS HOPPER (SWEEPING VERSION) 22
CLEANING THE BRUSH HEAD BRUSHES (SCRUBBING VERSION) 22
CLEANING THE BRUSH HEAD BRUSHES (SWEEPING VERSION) 22
DRAINING THE RECOVERY TANK 23
CLEANING THE RECOVERY TANK FILTERS 23
CLEANING THE VACUUM TUBE 23
EMPTYING THE SOLUTION TANK 23
CLEANING THE WATER SYSTEM FILTER 23
EXTRAORDINARY MAINTENANCE WORK 24
REPLACING THE BRUSH (SCRUBBING VERSION) 24
REPLACING THE BRUSH (SWEEPING VERSION) 24
REPLACING THE SQUEEGEE BODY RUBBER BLADES 24
ADJUSTMENT INTERVENTIONS 25
ADJUSTING THE SQUEEGEE BODY'S RUBBER BLADES 25
CHOOSING AND USING BRUSHES 25
TROUBLESHOOTING 26
EC DECLARATION OF CONFORMITY 28

The descriptions contained in this document are not binding. The company therefore reserves the right to make any modifications at any time to elements, details, or accessory supply, as considered necessary for reasons of improvement or manufacturing/commercial requirements. The reproduction, even partial, of the text and drawings contained in this document is prohibited by law.

The company reserves the right to make any technical and/or supply modifications. The images are for reference purposes only, and are not binding in terms of design and supply.

GENERAL SAFETY REGULATIONS

Before using the machine, please read the following document carefully and follow the instructions contained herein, along with the instructions in the document supplied with the machine itself, "GENERAL SAFETY REGULATIONS" (document code 10083659).

SYMBOLS USED IN THE MANUAL

Open book symbol with an "i":
Indicates the need to consult the instruction manual.

Open book symbol:
Tells the operator to read the user manual before using the device.

Covered place symbol:
The operations preceded by this symbol must always be carried out in a dry, covered area.

Information symbol:
Indicates additional information for the operator, to improve the use of the device.

Warning symbol:
Carefully read the sections preceded by this symbol meticulously following the instructions indicated for the safety of the operator and the device.

Danger symbol (corrosive substances):
The operator should always wear protective gloves to avoid the risk of serious injury to the hands caused by corrosive substances.

Danger symbol (battery acid leakage):
Indicates the danger of leaking acid or acid fumes from the batteries while they are being recharged.

Danger symbol (moving carriages):
Indicates that the packed product should be handled with suitable carriages that conform to legal requirements.

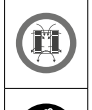

Mandatory room ventilation symbol:
Informs the operator that the room must be ventilated while the batteries are being recharged.

Symbol indicating the compulsory use of protective gloves:
Indicates that the operator should always wear protective gloves, to avoid the risk of serious injury to his hands from sharp objects.

Symbol indicating the compulsory use of tools:
Informs the operator of the need to use tools not included with the machine.

Symbol indicating a treading ban:
Informs the operator that it is forbidden to tread on machine components, as this could lead to serious injury.

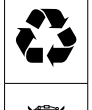

Recycling symbol:
Tells the operator to carry out the operations in compliance with environmental regulations in force in the place where the appliance is being used.

Disposal symbol:
Carefully read the sections marked with this symbol for disposing of the appliance.

PURPOSE AND CONTENT OF THE MANUAL

The aim of this manual is to provide customers with all the information needed to use the machine in the safest, most appropriate and most autonomous way. This includes information concerning technical aspects, safety, operation, downtime, maintenance, spare parts and scrapping. The operators and qualified technicians must carefully read the instructions in this manual before carrying out any operations on the machine. If in doubt about the correct interpretation of instructions, contact your nearest Customer Service Centre to obtain the necessary clarifications.

STORING THE USE AND MAINTENANCE MANUAL

The Use and Maintenance Manual must be stored in its special pouch close to the machine, protected from liquids and anything else that could compromise its legibility.

ON CONSIGNMENT OF THE MACHINE

When the machine is consigned to the customer, an immediate check must be performed to ensure all the material mentioned in the shipping documents has been received, and also to check the machine has not suffered damage during transportation. If this is the case, the carrier must ascertain the extent of the damage at once, informing our customer service office. It is only by prompt action of this type that the missing material can be obtained, and compensation for damage successfully claimed.

INTRODUCTORY COMMENT

Any floor scrubbing machine can only work properly and effectively if used correctly and kept in full working order by performing the maintenance operations described in the attached documentation. We therefore suggest you read this instruction booklet carefully and read it again whenever difficulties arise while using the machine. If necessary, remember that our assistance service (organised in collaboration with our dealers) is always available for advice or direct intervention.

IDENTIFICATION DATA

For technical assistance or to request replacement parts, always give the model, the version and the serial number (written on the relevant plate).

TECHNICAL DESCRIPTION

The **MxL Bt** is a floor scrubbing machine that can work on various types of floor and dirt thanks to the mechanical action of a brush and the chemical action of a water-detergent solution. As it advances, it collects the dirt removed, along with the detergent solution not absorbed by the flooring itself. **The machine must only be used for this purpose**.

INTENDED USE

This scrubbing machine was designed and built for the cleaning (scrubbing and drying) of smooth, compact flooring in the commercial, residential and industrial sectors by a qualified operator in proven safety conditions. The scrubbing machine is not suitable for cleaning rugs or carpet floors. It is only suitable for use in closed (or at least covered) places.

ATTENTION: the machine is not suitable for use in the rain, or under water jets.

ATTENTION: IT IS FORBIDDEN to use the machine for picking up dangerous dusts or inflammable liquids in places with an explosive atmosphere. In addition, it is not suitable as a means of transport for people or objects.

SAFETY

Operator cooperation is paramount for accident prevention. No accident prevention programme can be effective without the full cooperation of the person directly responsible for machine operation. The majority of occupational accidents that happen either in the workplace or whilst moving are caused by failure to respect the most basic safety rules. An attentive, careful operator is most effective guarantee against accidents and is fundamental in order to implement any prevention programme.

REGULATIONS

All references to forwards and backwards, front and rear, right and left indicated in this manual should be understood as referring to the operator in the driving position, with his/her hands on the control handlebars.

TARGET GROUP

This manual is written both for operators and for qualified machine maintenance technicians. Operators must not perform operations that should be carried out by qualified technicians. The manufacturer is not liable for damages resulting from failure to comply with this veto.

SERIAL NUMBER PLATE

The serial number plate is positioned underneath the electrical system control panel inside the machine. It indicates the general machine characteristics, in particular the serial number. The serial number is a very important piece of information and should always be provided together with any request for assistance or when purchasing spare parts. The serial number plate contains the following:

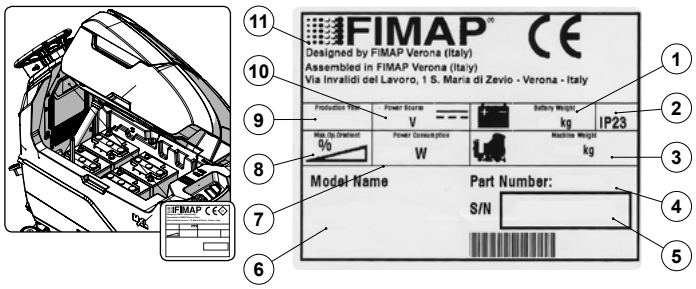

1. The weight of the batteries used to power the appliance (expressed in Kg).
2. The IP protection rating of the appliance.
3. The gross weight of the appliance (expressed in Kg).
4. The identification code of the appliance.
5. The serial number of the appliance.
6. The name of the appliance.
7. The nominal power consumed by the appliance (expressed in W).
8. The maximum grade that the appliance can handle during work activities (expressed in %).
9. The year in which the appliance was manufactured.
10. The nominal voltage of the appliance (expressed in V).
11. The commercial name of the appliance and the manufacturer's address.

TECHNICAL DATA

TECHNICAL DATA	Unit of Meas-urement	MxL 65 Bt	MxL 75 Bt	MxL 85 Bt	MxL 70 Bts
Rated machine power	W	1725	1725	1725	1625
Working capacity up to (1)	m^2/h	1638	1913	2100	1613
Working width	mm	655	765	840	645
Squeegee width (2)	mm	785	885	985	885
Brush head brush diameter (number - diameter)	mm	2 - ø340	2 - ø400	2 - ø430	-
Dimensions of cylindrical brush (number - diameter - length)	mm	-	-	-	2 - ø180 - 610
Number of brush head brush rotations	rpm	140	140	140	550
Brush head motor (voltage / nominal power)	V / W	24 - 500	24 - 500	24 - 500	24 - 450
Debris hopper internal volume	dm^3	-	-	-	8
Maximum weight exerted on the brush head	kg	33	35	38	33
Gradeability (weight(5))	%	-	-	-	-
Traction motor (voltage / rated power)	V / W	24 - 300	24 - 300	24 - 300	24 - 300
Maximum forward speed in transport mode	Km/h	4,9	4,9	4,9	4,9
Vacuum motor (voltage - nominal power rating)	V / W	24 - 422	24 - 422	24 - 422	24 - 422
Vacuum on vacuum head	mBar	112	112	112	112
Maximum solution tank capacity	l	74	74	74	74
Maximum recovery tank capacity	l	85	85	85	85
Machine dimensions (length - width(3) - height)	mm	1497 - 701 - 1093	1514 - 795 - 1093	1542 - 878 - 1093	1471 - 733 - 1093
Battery compartment dimensions (length - width - useful height)	mm	524 - 396 - 320	524 - 396 - 320	524 - 396 - 320	524 - 396 - 320
Recommended battery	V / AhC_5	6 - 180	6 - 180	6 - 180	6 - 180
Maximum individual battery weight (recommended)	kg	31	31	31	31
Machine weight(4)	kg	186	188	191	187
Machine weight during transport(5)	kg	310	312	315	311
Machine weight during work operations(6)	kg	387	389	392	388
Sound pressure level (ISO 11201) - L_{pa}	dB (A)	<70	<70	<70	<70
Uncertainty K_{pa}	dB (A)	1,5	1,5	1,5	1,5
Hand vibration level (ISO 5349)	m/s^2	<2,5	<2,5	<2,5	<2,5
Vibration measurement uncertainty		-	-	-	-

Remarks:

(1) The working capacity is calculated using a forward speed of 2.5 Km/h.
(2) The width of the squeegee refers to its maximum footprint.
(3) The width is to be understood as being without the squeegee mounted on the machine.
(4) Machine weight: refers to the overall machine weight without the batteries, and with both tanks empty.
(5) Machine weight during transport: refers to the overall machine weight with the batteries, but with both tanks empty.
(6) Machine weight during work operations: refers to the overall machine weight with the batteries, with the solution tank full, but with the recovery tank empty.

TECHNICAL DATA	Unit of Meas-urement	MxL 65 Bt	MxL 75 Bt	MxL 85 Bt	MxL 70 Bts
Rated machine power	W	1725	1725	1725	1625
Working capacity up to (1)	sq.ft/h	17.631	20.591	22.604	17.362
Working width	in	25,79	30,12	33,07	25,39
Squeegee width (2)	in	30,8	34,8	38,8	34,8
Brush head brush diameter (number - diameter)	in	2 - ø13,4	2 - ø15,75	2 - ø16,9	-
Dimensions of cylindrical brush (number - diameter - length)	in	-	-	-	2 - ø7 - 24
Number of brush head brush rotations	rpm	140	140	140	550
Brush head motor (voltage / nominal power)	V / W	24 - 500	24 - 500	24 - 500	24 - 450
Debris hopper internal volume	ft^3	-	-	-	0,28
Maximum weight exerted on the brush head	lb	72,75	77,16	83,78	72,75
Gradeability (weight(5))	%	-	-	-	-
Traction motor (voltage / rated power)	V / W	24 - 300	24 - 300	24 - 300	24 - 300
Maximum forward speed in transport mode	mph	3,04	3,04	3,04	3,04
Vacuum motor (voltage - nominal power rating)	V / W	24 - 422	24 - 422	24 - 422	24 - 422
Vacuum on vacuum head	mBar	112	112	112	112
Maximum solution tank capacity	gal	19,55	19,55	19,55	19,55
Maximum recovery tank capacity	gal	22,45	22,45	22,45	22,45
Machine dimensions (length - width(3) - height)	in	58,9 - 27,6 - 43	59,6 - 31,3 - 43	60,7 - 34,6 - 43	57,9 - 28,9 - 43
Battery compartment dimensions (length - width - useful height)	in	20,6 - 15,6 - 12,6	20,6 - 15,6 - 12,6	20,6 - 15,6 - 12,6	20,6 - 15,6 - 12,6
Recommended battery	V / AhC_5	6 - 180	6 - 180	6 - 180	6 - 180
Maximum individual battery weight (recommended)	lb	68	68	68	68
Machine weight(4)	lb	410	414,5	421,1	412,3
Machine weight during transport(5)	lb	683,4	687,8	694,5	685,6
Machine weight during work operations(6)	lb	853,2	857,6	864,2	855,4
Sound pressure level (ISO 11201) - L_{pa}	dB (A)	<70	<70	<70	<70
Uncertainty K_{pa}	dB (A)	1,5	1,5	1,5	1,5
Hand vibration level (ISO 5349)	m/s^2	<2,5	<2,5	<2,5	<2,5
Vibration measurement uncertainty		-	-	-	-

Remarks:
(1) The working capacity is calculated using a forward speed of 1.5 Km/h.
(2) The width of the squeegee refers to its maximum footprint.
(3) The width is to be understood as being without the squeegee mounted on the machine.
(4) Machine weight: refers to the overall machine weight without the batteries, and with both tanks empty.
(5) Machine weight during transport: refers to the overall machine weight with the batteries, but with both tanks empty.
(6) Machine weight during work operations: refers to the overall machine weight with the batteries, with the solution tank full, but with the recovery tank empty.

DISPOSAL

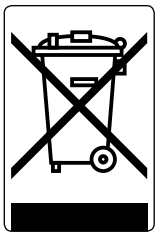

To dispose of the machine, take it to a demolition centre or an authorised collection centre. Before scrapping the machine, it is necessary to remove and separate out the following materials, then send them to the appropriate collection centres in accordance with the environmental hygiene regulations currently in force:

- Brushes
- Felt
- Electric and electronic parts*
- Batteries
- Plastic parts (tanks and handlebars)
- Metal parts (levers and frame)

(*) In particular, contact your distributor when scrapping electric and electronic parts.

SYMBOLS USED ON THE MACHINE

SYMBOLS PRESENT ON THE REGISTRATION PLATE

Direct current symbol:
Used on the appliance's registration plate to indicate that the appliance is powered by a DC power supply.

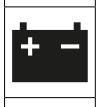

Battery symbol:
Used on the appliance's registration plates to indicate the mass of the batteries used to power the appliance (expressed in Kg). The value refers to the batteries that the manufacturer offers.

Maximum gradient symbol:
Used on the registration plate of the device, to indicate the maximum gradient that can be safely handled by the device in work mode.

SYMBOLS PRINTED ON THE MACHINE

Solution tank drain pipe symbol:
Located on the rear part of the machine, to identify the solution tank drainage tube.

Recovery tank drainage hose symbol:
Located on the rear part of the machine, to identify the recovery tank drainage tube.

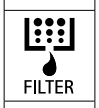

Cap/filter position symbol:
Used on the rear of the device to indicate the position of the solution tank cap/filter.

Symbol of maximum temperature for filling the solution tank:
Used on the side of the device, to indicate the maximum temperature of the water for filling the solution tank safely.

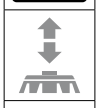

Position symbol for the brush head control pedal:
Located on the rear part of the machine, to identify the brush head control pedal.

Symbol for extra brush head pressure activation:
Located on the rear part of the machine, to identify the correct position of the brush head control pedal in order to activate the extra pressure function.

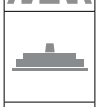

Squeegee body working position symbol:
Located on the rear part of the machine, to indicate the squeegee control lever rotation direction for bringing the squeegee to its working position.

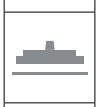

Symbol for squeegee body idle:
Located on the rear part of the machine, to indicate the squeegee control lever rotation direction for bringing the squeegee to its idle position.

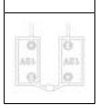

Battery connection symbol:
Located on the front of the solution tank, to indicate how to connect the 12V batteries in order to obtain a total voltage of 24V.

LABELS USED ON THE MACHINE

Label for detergent solution tap command:
Located on the right-hand side of the machine, to identify the control knob of the detergent solution tap.

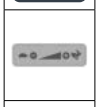

Label for brush head tilt adjustment:
Located on the front of the machine, to identify the knob for adjusting the brush head body tilt.

Label indicating the need to read the Use and Maintenance Manual:
Affixed to the machine in order to warn the operator to read the user and maintenance manual (this document) before using the machine for the first time.

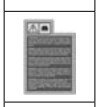

Battery recharge hazard label:
Located inside the machine (above the electric system carter), to warn the operator of the possible risk during battery recharging

Battery recharge warning label:
Located inside the machine (above the electric system carter), to warn the operator when it's necessary to recharge the batteries.

Daily care warning label:
Applied to the machine to remind the operator of the applicable procedures for properly caring for the machine itself.

Machine use warning label:
Located on the rear of the machine, to warn the operator which substances cannot be removed with the machine.

Solution tank filter daily care warning label:
Applied to the machine to remind the operator to clean the solution tank after each use.

Moving brush hazard label:
Used on the machine to warn the operator not to place his/her hands near the moving brush.

Label warning about the risk of crushed hands:
Indicates danger to hands due to crushing between two surfaces.

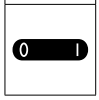

Main switch symbol:
Located near the control panel, to indicate the main key switch.

PREPARATION OF MACHINE

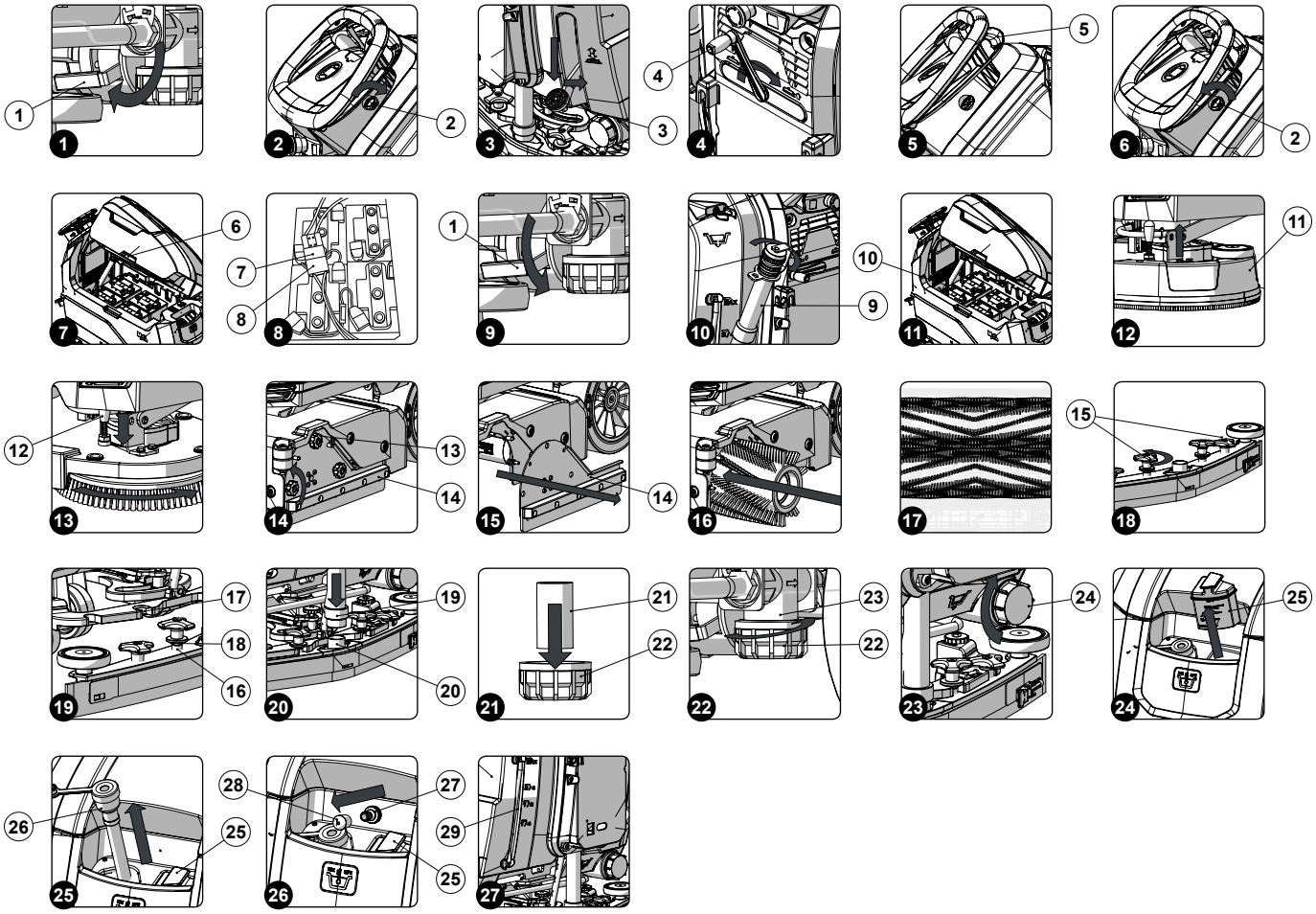

HANDLING THE PACKAGED MACHINE

The machine is contained in specific packaging, and since the packaging elements (plastic bags, staples, etc.) are a potential source of danger, they should not be left within the reach of children, disabled persons, etc.
The machine's overall weight including packaging is 000Kg.
The overall dimensions of the package are: width=765mm length=1460mm height=1270mm.

N.B.: it is recommended that all the packaging components be kept for any future machine transportation.

ATTENTION: Move the packaged product with handling equipment that complies with legal requirements regarding size and mass of the packaging.

HOW TO UNPACK THE MACHINE

The machine is shipped in specific packaging. To remove it, proceed as follows:

1. Place the lower part of the outer packaging in contact with the floor.

N.B.: Use the pictograms printed on the box as reference.

2. Remove the outer package.

CAUTION: these operations must be carried out using protective gloves to avoid any possible contact with the edges or tips of metal objects.

3. Make sure the electric brake is not engaged, then rotate the lever (1) in the direction of the arrow. The lever is located on the rear right-hand side of the machine (**Fig.1**).
4. The machine is fixed to the pallet by means of chocks, which block the wheels and brush head; remove these chocks.
5. Use a ramp to bring the machine down from the pallet.

CAUTION: do not fit the brush and the rear squeegee body before unloading the machine, and avoid any violent jolts to the brush head and squeegee support.

N.B.: the ramp gradient must not be such as to cause damage to the machine as it comes down.

HOW TO MOVE THE MACHINE

To transport the machine safely, proceed as follows:

DANGER: before starting any task, make sure the current regulations concerning the safe transport of dangerous substances are scrupulously observed.

1. Check to make sure that the solution tank and the recovery tank are empty. If this is not the case, empty them (see the sections titled "EMPTYING THE SOLUTION TANK" and "EMPTYING THE RECOVERY TANK").
2. Insert the key (2) into the main switch on the control panel. Set the main switch to "I" by turning the key (2) to the right (**Fig.2**).
3. Raise the brush head body and fully depress the "BRUSH HEAD CONTROL" pedal (3) at the rear of the machine (**Fig.3**).

N.B.: to lock the brush head in the raised position, depress the pedal (3) fully and then move it towards the right-hand side of the machine (**Fig.3**).

4. Raise the squeegee body and turn the squeegee control lever (4) in the direction of the arrow (**Fig.4**). The lever is located on the back of the machine.
5. When you push the dead man's lever (5) (**Fig.5**), the machine will begin to move.
6. Use a ramp to move the machine up onto the transport vehicle.

CAUTION: During this operation, check there are no people or objects near the machine.

N.B.: the ramp gradient must not be such as to cause damage to the machine as it goes up.

Once the machine is on the means of transport, set the main switch to its "0" position by turning the key (2) to the left (**Fig.6**). Remove the key from the main switch.
Grip the handle (6) and raise the recovery tank to the maintenance position (**Fig.7**).
Disconnect the battery connector (7) from the main system connector (8) of the machine (**Fig.8**).
Grip the handle (6) and lower the recovery tank to its working position.

WARNING: secure the device according to the directives in force in the country of use, so that it cannot slide or tip over.

MACHINE SAFETY

To ensure that work is carried out in the best safety conditions, proceed as follows:

1. Make sure the electric brake is engaged, then rotate the lever (1) in the direction of the arrow. The lever is located on the rear right-hand side of the machine (**Fig.9**).
2. Make sure the recovery tank is empty. If it isn't, empty it using the tube (9) on the rear left-hand side of the machine (**Fig.10**) (see "EMPTYING THE RECOVERY TANK").

ATTENTION: The tanks should be emptied in the place used for draining dirty water. The place this operation is carried out should comply with current environmental protection regulations.

3. Switch off the machine and turn the main switch to "0" by turning the key (2) a quarter turn anti-clockwise (**Fig.6**).
4. Raise the brush head body and fully depress the "BRUSH HEAD CONTROL" pedal (3) at the rear of the machine (**Fig.3**).

N.B.: to lock the brush head in the raised position, depress the pedal (3) fully and then move it towards the right-hand side of the machine (**Fig.3**).

5. Raise the squeegee body and turn the squeegee control lever (4) in the direction of the arrow (**Fig.4**). The lever is located on the back of the machine.
6. Grip the handle (6) on the right-hand side of the recovery tank (**Fig.7**) and turn the tank as far as it will go, until it reaches the maintenance position.
7. Disconnect the electrical system connector (7) from the battery connector (8) (**Fig.8**).

ATTENTION: This process must be carried out by qualified personnel.

8. Grip the handle (6) on the right-hand side of the recovery tank and turn the tank until it reaches the work position.

TYPE OF BATTERY TO BE USED

Power to the machine must be supplied by two sealed traction batteries with gas recombination or gel technology. The batteries must meet the requirements laid out in the norms: CEI EN 60254-1:2005-12 (CEI 21-5) + CEI EN 60254-2:2008-06 (CEI 21-7). For the best work results, we suggest the use of two 12V MFP 112 Ah/C5 batteries.

BATTERY MAINTENANCE AND DISPOSAL

For battery maintenance and recharging, respect the instructions provided by the battery manufacturer. When the batteries reach the end of their service life, they must be disconnected by specialized and properly trained personnel, and must be subsequently removed from the battery compartment using suitable lifting devices.

N.B.: dead batteries are classified as dangerous waste and as such must be delivered to an authorised body for disposal.

INSERTING THE BATTERIES IN THE MACHINE

To fit the batteries inside the machine, contact an FIMAP assistance centre technician.
The batteries should be connected so as to obtain a total voltage of 24V.

WARNING: FIMAP declines all responsibility for any damage to property or injury persons in the event that the batteries are replaced by an unauthorized technician.

RECHARGING THE BATTERIES

The batteries must be charged prior to first use, and whenever they no longer provide sufficient power.

ATTENTION: to avoid any permanent damage to the batteries, it is essential to avoid their complete discharge; begin recharging them within a few minutes of noting the "discharged batteries" signal.

ATTENTION: Never leave the batteries completely discharged, even if the device is not being used.

1. Bring the machine to the battery recharging area.
2. Make sure the machine is in a safe condition (read “MACHINE SAFETY”).

ATTENTION: Park the machine in an enclosed place, on a flat and level surface; near the machine there must be no objects that could either damage it, or be damaged through contact with it.

ATTENTION: the room used to recharge the batteries must be adequately ventilated to prevent the accumulation of gases that leak from batteries.

3. Grip the handle (6) and raise the recovery tank to the maintenance position (**Fig.7**).

To recharge the batteries without the built-in battery charger, proceed as follows:

- Disconnect the electrical system connector (7) from the battery connector (8) (**Fig.8**).

ATTENTION: the following operations must be carried out by qualified personnel. An incorrect connection of the connector may cause a malfunction of the device.

- Connect the external battery charger cable to the battery connector.

NOTE: the coupling connector of the battery charger is consigned inside the bag containing this instruction booklet, and must be assembled on the cables of the battery charger as indicated in the instructions.

ATTENTION: before connecting the batteries to the battery charger, make sure it is suitable for the batteries used.

NOTE: Carefully read the Use and Maintenance Manual of the battery charger to be used before carrying out the battery charge cycle.

- Grasp the handle (6) and turn to the charging position; the lower part of the recovery tank must be resting on the stop (10) (**Fig.11**).

CAUTION: keep the recovery tank open for the duration of the battery recharging cycle to allow gas fumes to escape.

- Once the recharge cycle has been completed, disconnect the battery charger's cable from the battery connector.
- Connect the electrical system connector (7) to the battery connector (8).
- Grip the handle (6) and turn the recovery tank to its working position.

To recharge the batteries with the on-board battery charger proceed as follows:

ATTENTION: the following operations must be carried out by qualified personnel. An incorrect connection of the connector may cause a malfunction of the device.

NOTE: Carefully read the Use and Maintenance Manual of the battery charger delivered with the machine before carrying out the battery charge cycle.

CAUTION: before connecting the batteries to the battery charger, make sure it is suitable for the batteries used.

NOTE: The charger power cable is delivered inside the bag containing this instruction booklet.

- Connect the battery charger power supply cable to the cable on the battery charger itself.
- Plug the battery charger cable into the mains socket.
- Grasp the handle (6) and turn to the charging position; the lower part of the recovery tank must be resting on the stop (10) (**Fig.11**).

CAUTION: keep the recovery tank open for the duration of the battery recharging cycle to allow gas fumes to escape.

- When the recharge cycle is complete, disconnect the battery charger power supply cable from the mains.
- Disconnect the battery charger power supply cable from the cable on the battery charger itself.
- Grip the handle (6) and turn the recovery tank to its working position.

ASSEMBLING THE BRUSH (SCRUBBING VERSION)

To assemble the brushes to bush head body, which for reasons of packaging are supplied dismantled from the machine, proceed as follows:

1. Perform the procedure for securing the machine (see the section titled “SECURING THE MACHINE”).

CAUTION: users are advised to always wear protective gloves, to avoid the risk of serious injury to hands.

2. Raise the brush head body and fully depress the "BRUSH HEAD CONTROL" pedal (3) at the rear of the machine (**Fig.3**).

N.B.: to lock the brush head in the raised position, depress the pedal (3) fully and then move it towards the right-hand side of the machine (**Fig.3**).

3. With the brush head in the raised position, remove the brush head splash guards (11) (**Fig.12**).
4. Insert the brush into the flange on the brush head body, press the brush-holder plate retainer (12) and simultaneously rotate the brush in the direction shown in the image (**Fig.13**).

ATTENTION: Fig.13 shows the rotation direction of the left-hand brush, rotate in the opposite direction for the right-hand brush.

5. Repeat the operations completed for the right-hand front brush as well.

ASSEMBLING THE BRUSH (SWEEPING VERSION)

To assemble the brushes to bush head body, which for reasons of packaging are supplied dismantled from the machine, proceed as follows:

1. Perform the procedure for securing the machine (see the section titled “SECURING THE MACHINE”).

CAUTION: users are advised to always wear protective gloves, to avoid the risk of serious injury to hands.

2. Raise the brush head body and detach the "BRUSH HEAD BODY CONTROL" pedal (3) at the rear of the machine from the plate retainer (**Fig.3**).
3. With the brush head raised from the floor, turn the knobs (13) that hold the left lateral carter (14) in place anti-clockwise (**Fig.14**).
4. Remove the left lateral carter (14) (**Fig.15**).
5. Insert the brush into the tunnel (**Fig.16**), taking care to make sure that the gearmotor drive shaft enters the slit in the brush itself.
6. Repeat the previously described operations for the right-hand side as well.

N.B.: In order to be installed correctly, the brushes must form an X when viewed from above in the forward direction of movement (**Fig.17**).

ASSEMBLING THE SQUEEGEE BODY

For packaging reasons, the squeegee body comes disassembled from the machine. In order to mount it on the squeegee support, do the following:

1. Make sure the machine is in a safe condition (read "MACHINE SAFETY").
2. Raise the squeegee body and turn the squeegee control lever (4) in the direction of the arrow (**Fig.4**). The lever is located on the back of the machine.

CAUTION: these operations must be carried out using protective gloves to avoid any possible contact with the edges or tips of metal objects.

3. Unscrew the knobs (15) in the squeegee body pre-assembly (**Fig.18**).
4. First of all, insert the left-hand pin (16) on the squeegee body in the left slit (17) in the squeegee support (**Fig.19**), so that the bushing (18) adheres to the walls of the slit.
5. Tighten the knobs (15) to fix the squeegee body to the support.
6. Repeat the same operation for the right pin.
7. Insert the vacuum tube (19) in the sleeve (20) in the squeegee body (**Fig.20**).

N.B.: the tube must be positioned behind the squeegee lifting chain.

N.B.: Although the squeegee comes pre-adjusted, it is nevertheless recommended to read the section titled "ADJUSTING THE SQUEEGEE BODY'S RUBBER BLADES".

INSERTING WATER SYSTEM FILTER

Before using the machine for the first time the water system filter needs to be reset, for shipping reasons the filter cartridge and the cap have been removed. To insert the filter cartridge in the water system filter body proceed as follows:

1. Take the machine to the maintenance area.
2. Make sure the machine has been secured (see the section titled "SECURING THE MACHINE").

CAUTION: users are advised to always wear protective gloves, to avoid the risk of serious injury to hands.

3. Insert the filter cartridge (21) in the housing on the cap (22) (**Fig.21**).

N.B.: The O-ring gasket in the filter cartridge should be inserted into its seat in the cap.

4. Go to the right-hand side of the machine, screw on the cap (22) to the body of the detergent solution filter (23) (**Fig.22**).

FILLING THE SOLUTION TANK WITH WATER

Before filling the solution tank, carry out the following steps:

1. Take the machine to the usual place for filling the solution tank.
2. Perform the procedure for securing the machine (see the section titled "SECURING THE MACHINE").
3. Check the solution tank drainage cap (24) (on the rear right-hand side of the machine) is tight. If it isn't, turn it clockwise (**Fig.23**).
4. Check the water system filter cap (22) (on the rear right-hand side of the machine) is tight. If it isn't, turn it clockwise (**Fig.22**).

The solution tank can be filled with water in three different ways:

- Remove the cap/measuring device (25) (**Fig. 24**) and fill the solution tank by means of a rubber hose or a bucket.
- When using the filler hose (26) (**Fig.25**), which supports the water hose on its own, remember to remove the cap/measuring device (25) in order to allow the air to vent properly.
- Using the optional automatic clean water refill system, connect the female connector on the tube to the male connector (27) on the machine (**Fig. 26**); before connecting the tube, remember to remove the cap (28) and the cap/measuring device (25) to enable the air to be vented.

5. Fill with clean water, at a temperature not higher than 50°C and not lower than 10°C. The amount inside the tank can be seen by means of the level tube (29) (**Fig.27**) on the rear of the machine.

DETERGENT SOLUTION

After filling the solution tank with clean water add the liquid detergent to the tank in the concentration and manner indicated on the detergent manufacturer's label. To prevent the formation of an excessive amount of foam that could damage the vacuum motor, use the minimum percentage of detergent required.

CAUTION: protective gloves should always be worn before handling detergents or acidic or alkaline solutions, to avoid serious injury to the hands.

CAUTION: Always use detergents whose manufacturer's label indicates their suitability for scrubbing machines. Do not use acid or alkaline products or solvents without this indication.

ATTENTION: Acid or alkaline maintenance detergent tank be used with pH values between 4 and 10 and that do not contain: oxidising agents, chlorine or bromine, formaldehyde, mineral solvents. The detergents used must be suitable for use with scrubbing machines.

CAUTION: always use low-foam detergent. To avoid the production of foam, put a minimum quantity of anti-foam liquid in the recovery tank before starting to clean. Do not use pure acids.

N.B.: to make it easier to measure the detergent on the cap/measuring device, there are notches indicating the detergent percentage quantities that can be used. The notches range from a minimum of 0.1% to a maximum of 0.5%.

PREPARING TO WORK

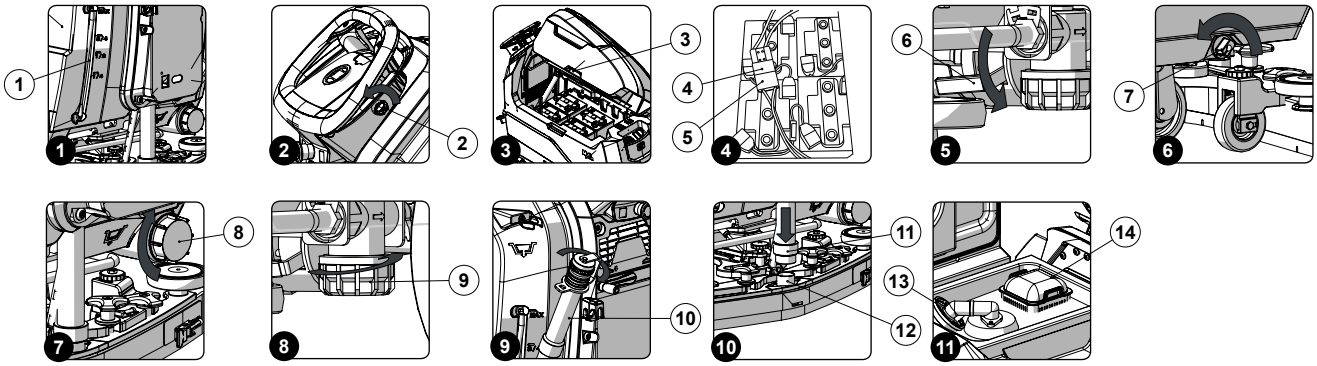

Before beginning to work, it is necessary to:

1. Make sure the recovery tank is empty. If this is not the case, empty it (read "EMPTYING THE RECOVERY TANK").
2. Check that the amount of detergent solution in the solution tank is sufficient for the type of work to be performed. If it isn't, top up the solution tank (see "FILLING THE SOLUTION TANK WITH WATER" and "DETERGENT SOLUTION"). Check the level tube (1) in the rear left-hand part of the machine (**Fig.1**).
3. Check the rubber squeegee blades are in good working condition. If they aren't, replace them (see "REPLACING THE SQUEEGEE BODY RUBBER BLADES").
4. Check that the condition of the brush is suitable for work; if this is not the case, replace it (see "REPLACING THE BRUSH HEAD BRUSH (SCRUBBING VERSION)" or "REPLACING THE BRUSH HEAD BRUSH (SWEEPING VERSION)").
5. Check that the machine is off; if this is not the case, turn the key (2) a quarter turn anti-clockwise (**Fig.2**) . Remove the key from the instrument panel.
6. Grip the handle (3) on the right-hand side of the recovery tank (**Fig.3**) and turn the tank as far as it will go, until it reaches the maintenance position.
7. Connect the main system connector (4) to the battery connector (5) (**Fig.4**).

ATTENTION: This process must be carried out by qualified personnel.

8. Grip the handle (3) on the right-hand side of the recovery tank and turn the tank until it reaches the work position.
9. Make sure the electronic brake is engaged. If it isn't, turn the lever (6) in the direction of the arrow. The traction gearmotor is located on the rear right-hand side of the machine (**Fig.5**).
10. Check the water tap is fully open - the water adjustment knob (7) must be turned fully in the direction shown by the arrow (**Fig.6**).
11. Make sure the solution tank drainage cap (8) is closed. If it isn't, close it (**Fig.7**).
12. Make sure the water filter cap (9) is closed. If it isn't, close it (**Fig.8**).
13. Make sure the cap of the recovery tank drainage tube (10) is closed. If it isn't, close it (**Fig.9**).
14. Make sure the vacuum tube (11) is correctly connected to the sleeve (12) in the squeegee body. If it isn't, connect it (**Fig.10**).
15. Make sure the vacuum motor filter (13) is correctly connected and is clean (**Fig.11**). If it isn't, clean it (see "CLEANING THE RECOVERY TANK FILTERS").
16. Make sure the filter basin (14) is correctly connected and is clean (**Fig.11**). If it isn't, clean it (see "CLEANING THE RECOVERY TANK FILTERS").

STARTING WORK

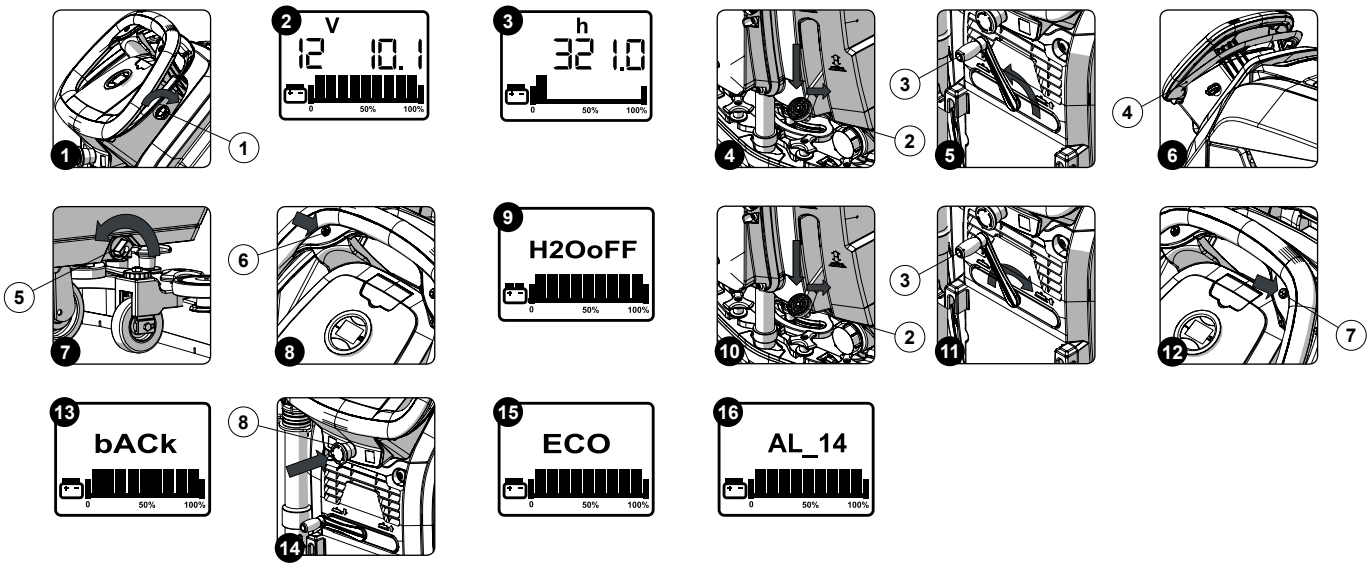

To start working, do as follows:

1. Make all the checks listed in "PREPARING TO WORK".
2. Go to the driving position, behind the machine.
3. Turn on the machine and turn the key (1) a quarter turn clockwise (**Fig.1**).
4. When the display comes on, the screens appear in sequence.

N.B.: In the first screen the nominal battery voltage programmed into the control board is displayed on the left of the screen, and on the right, the minimum inhibit temperature appears (**Fig.2**).

N.B.: The second screen displays the hours of work completed by the machine (**Fig.3**).

N.B.: the steps for a complete scrubbing and drying cycle are explained below.

5. Lower the brush head body and detach the "BRUSH HEAD CONTROL" pedal (2) at the rear of the machine from the plate retainer (**Fig.4**).
6. Lower the squeegee body and turn the squeegee control lever (3) in the direction of the arrow (**Fig.5**). The lever is located on the back of the machine.
7. When the dead man's lever (4) is pressed, the machine will begin to move. The lever is located underneath the control handlebars (**Fig.6**).

N.B.: the gearmotor will only begin functioning, and the solenoid valve will only begin dispensing detergent solution, when the brush head body is in its working position.

8. During the first few metres, check that the detergent solution coming out is suitable for the task in hand. If it isn't, adjust it after reading the section "REGULATING THE DETERGENT SOLUTION".

The machine will now begin to work with full efficiency until the battery is flat or until the detergent solution has finished.
During the first few metres, check that there is sufficient solution and that the squeegee is drying correctly.

N.B.: If the dead man's lever is released during the scrubbing with drying operation, the brush motor and the solenoid valve will be deactivated. The vacuum motor will continue working until the squeegee control lever is rotated to bring it back to its idle position.

N.B.: if the squeegee body is raised during the scrubbing and drying operation, the vacuum motor will continue working at maximum speed for a certain period of time, and then switch off. This ensures that all the liquid in the vacuum tube is eliminated.

N.B.: when filling the solution tank, it is good practice to empty the recovery tank using the special drainage hose.

HOUR METER

The machine control panel contains the control display, which shows the total usage time. The numbers before the letter "h" identify the hours, while the numbers before the letter "m" identify the tenths of an hour (a tenth of an hour corresponds to six minutes). The flashing ":" symbol indicates that the hour meter is counting the machine functioning time (**Fig. 3**).

BATTERY CHARGE LEVEL INDICATOR

On the lower part of the display, you can see the battery charge level (**Fig. 3**). When the batteries fitted in the machine are fully charged, the line at the bottom consists of nine illuminated indicator bars. As the batteries gradually run down, the indicator bars are no longer illuminated. When

the battery “critical charge” threshold is reached, the last indicator bar flashes for about 20 seconds, after which the “battery” symbol begins to flash.

SCRUBBING WITH DRYING

To perform a scrubbing and drying program, proceed as follows:

1. Make all the checks listed in “PREPARING TO WORK”.
2. Go to the driving position, behind the machine.
3. Turn on the machine and turn the key (1) a quarter turn clockwise (**Fig.1**).
4. Lower the brush head body and detach the "BRUSH HEAD CONTROL" pedal (2) at the rear of the machine from the plate retainer (**Fig.4**).
5. Lower the squeegee body and turn the squeegee control lever (3) in the direction of the arrow (**Fig.5**). The lever is located on the back of the machine.
6. When the dead man's lever (4) is pressed, the machine will begin to move. The lever is located underneath the control handlebars (**Fig.6**).

N.B.: the gearmotor will only begin functioning, and the solenoid valve will only begin dispensing detergent solution, when the brush head body is in its working position.

7. During the first few metres, check that the detergent solution coming out is suitable for the task in hand. If it isn't, adjust it after reading the section "REGULATING THE DETERGENT SOLUTION".

SCRUBBING WITHOUT DRYING

To perform a scrubbing only program, proceed as follows:

1. Make all the checks listed in “PREPARING TO WORK”.
2. Go to the driving position, behind the machine.
3. Turn on the machine and turn the key (1) a quarter turn clockwise (**Fig.1**).
4. Lower the brush head body and detach the "BRUSH HEAD CONTROL" pedal (2) at the rear of the machine from the plate retainer (**Fig.4**).
5. When the dead man's lever (4) is pressed, the machine will begin to move. The lever is located underneath the control handlebars (**Fig.6**).

N.B.: the gearmotor will only begin functioning, and the solenoid valve will only begin dispensing detergent solution, when the brush head body is in its working position.

6. During the first few metres, check that the detergent solution coming out is suitable for the task in hand. If it isn't, adjust it after reading the section "REGULATING THE DETERGENT SOLUTION".

DRYING

To perform a drying program, proceed as follows:

1. Make all the checks listed in “PREPARING TO WORK”.
2. Go to the driving position, behind the machine.
3. Turn on the machine and turn the key (1) a quarter turn clockwise (**Fig.1**).
4. Lower the squeegee body and turn the squeegee control lever (3) in the direction of the arrow (**Fig.5**). The lever is located on the back of the machine.
5. When the dead man's lever (4) is pressed, the machine will begin to move. The lever is located underneath the control handlebars (**Fig.6**).

N.B.: the vacuum motor will only begin to work when the squeegee body is in contact with the floor.

The drying without scrubbing operation should only be carried out if the machine was previously used to carry out a scrubbing without drying operation.

ADJUSTMENT OF THE DETERGENT SOLUTION FLOW

To adjust the flow of detergent solution during work, proceed as follows:

Make sure the detergent solution tap is fully open, rotating the knob (5) in the direction of the arrow (**Fig.7**). As the knob is rotated, the flow of detergent in the machine water circuit is increased.
On pushing the dead man's lever (4) the brush motor will start operating and the solenoid valve will distribute detergent solution to the brush (**Fig.6**).
During the first few meters check that the amount of solution is sufficient to wet the floor, but not excessive to exit the splash guard.
If the amount of solution that comes out is not suitable, it can be controlled via the knob (5) on the rear left-hand side of the machine (**Fig.7**).

N.B.: If you wish to stop the delivery of detergent solution completely when working, press the button (6) on the control handlebars (**Fig.8**).

N.B.: When the button (6) on the control display is pressed, the word “H2O STOP” will appear intermittently(**Fig.9**).

N.B.: To reactivate the delivery of the detergent solution, press the button (6) again.

REGULATING THE FORWARD SPEED

This machine is equipped with electronic traction control. During work, the forward speed can be adjusted by pressing the operator lever (4) located under the control handlebars (**Fig.6**).

N.B.: The more the lever (4) is pressed, the more the forward speed will increase.

REVERSE GEAR

This machine is equipped with electronic traction control. To reverse, proceed as follows:

1. Raise the brush head body and depress the "BRUSH HEAD BODY CONTROL" pedal (2) at the rear of the machine fully (**Fig.10**).

N.B.: to lock the brush head in the raised position, depress the pedal (2) fully and then move it towards the right-hand side of the machine (**Fig.10**).

N.B.: if the brush head body is left in contact with the floor, the gearmotor will continue functioning but the solenoid valve will stop dispensing detergent solution on the brush.

2. Raise the squeegee body and turn the squeegee control lever (3) in the direction of the arrow (**Fig.11**); the lever is located on the back of the machine.
3. Press the “REVERSE ACTIVATION - DEACTIVATION” button (7) on the control handlebars (**Fig.12**).

N.B.: As soon as the button (7) is pressed, the word “BACK” will appear on the control display (**Fig.13**).

4. Activate the dead man's levers (4) on the handlebars (**Fig.6**) to start moving the machine in reverse mode.

WARNING: the reverse speed is lower than the forward speed to comply with current health and safety standards. If the potentiometer is adjusted while reversing, the adjustment of the forward speed will be automatically changed.

WARNING: It is impossible to reverse if the squeegee body touches the floor. In order to reverse, lift the squeegee body from the floor using the relevant lever on the back of the machine.

N.B.: to disable reverse movement, press the button (7) on the control handlebars again.

BATTERY DISCONNECT SWITCH

If any serious problems are encountered during the work operations, press the battery disconnect button (8) on the electrical system carter (**Fig. 14**).

CAUTION: This command interrupts the electrical circuit between the batteries and the machine system.

N.B.: To recommence work having stopped and once the problem has been resolved, switch off the machine and turn the knob (8) in the direction of the arrows indicated on it.

ECO MODE

This machine has an Eco-Mode function for reducing the noise generated by the vacuum motor, and for reducing the energy used by the machine.
To activate or deactivate this function, just press the button (6) on the instrument panel for at least three seconds (**Fig.8**).

N.B.: When the Eco-Mode function is active, the word “ECO” will flash on the control display (**Fig.15**).

To disable the Eco-mode function, simply press the button (6).
If the dead man's lever (4) is released when performing a scrubbing with drying operation in Eco-Mode (**Fig.6**), both the traction motor and the brush motor, along with the solenoid valve, will stop working, while the vacuum motor will continue to function until it is raised off the floor.

N.B.: To recommence work, simply press the dead man's lever (4) and the traction motor will start immediately; the brush motor; the solenoid valve.

RECOVERY TANK OVERFLOW

The machine is equipped with a mechanical device (float) under the recovery tank lid that, when the recovery tank is full, shuts off the air to the vacuum motor intake to protect it; the sound of the vacuum motor will then be deeper.
If this is the case, proceed as follows:

1. Raise the brush head body and depress the "BRUSH HEAD BODY CONTROL" pedal (2) at the rear of the machine fully (**Fig.10**).

N.B.: to lock the brush head in the raised position, depress the pedal (2) fully and then move it towards the right-hand side of the machine (**Fig.10**).

2. Raise the squeegee body off the floor by means of the lever (3) on the back of the machine (**Fig.11**).

3. Bring the machine to the designated place for draining off the dirty water, and empty the recovery tank (see “EMPTYING THE RECOVERY TANK”).

ALARM SCREEN

In Essential versions, when there is an error, the text AL is shown on the command display followed by a number (**Fig.16**); this stays visible until the error is resolved. When an error occurs, do as follows:

1. Stop the machine immediately.
2. If the error persists, switch off the machine, wait for at least ten seconds and switch on the machine.
3. If the error persists contact the nearest service centre.

AT THE END OF THE WORK

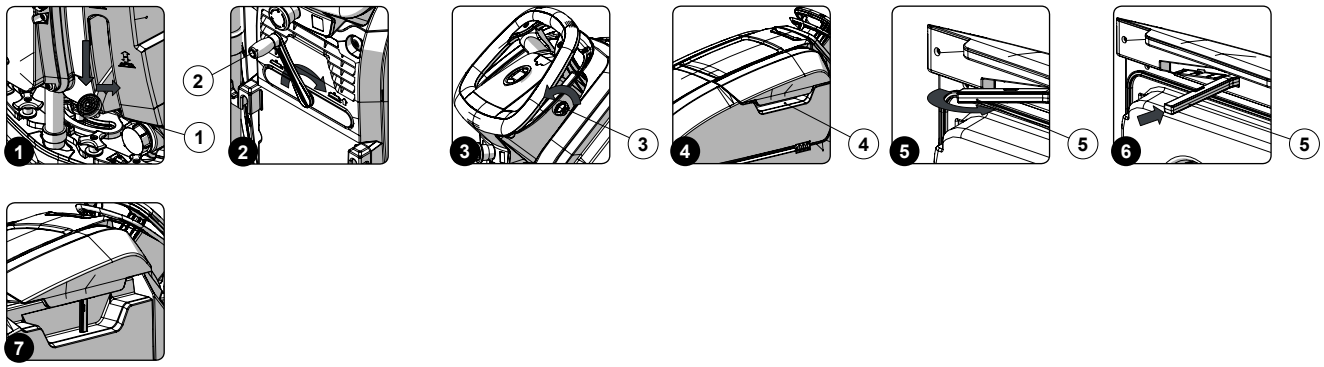

At the end of the work, and before carrying out any type of maintenance, perform the following operations:

1. Raise the brush head body and detach the "BRUSH HEAD CONTROL" pedal (1) at the rear of the machine from the plate retainer (**Fig.1**).
2. Raise the squeegee body off the floor by means of the lever (2) on the back of the machine (**Fig.2**).
3. Take the appliance to the dedicated dirty water drainage area.
4. Switch off the machine by turning the main switch (3) to "0", making a quarter turn of the key in the direction of the arrow (**Fig.3**). Remove the key from the instrument panel.
5. Carry out all the procedures listed in the chapter “RECOMMENDED PERIODIC MAINTENANCE” indicated in the column “AT THE END OF THE WORK”.
6. Take the machine to the designated machine storage place.

⚠ **ATTENTION:** Park the machine in an enclosed place, on a flat surface; near the machine there must be no objects that could either damage it, or be damaged through contact with it.

7. Secure the machine, see the section titled “SECURING THE MACHINE”.

⚠ **ATTENTION:** if the machine is left unused for more than one whole day, remove the brush from the brush head body, and the squeegee body from the squeegee support.

8. Grip the handle (4) on the right-hand side of the recovery tank cover (**Fig.4**) and turn the tank cover as far as it will go.
9. Grip the prop (5) and turn it as far as it will go (**Fig.5**).
10. Block the rotation of the prop (5) by pushing it towards the inside of the cover (**Fig.6**).
11. Grip the handle (4) and turn the recovery tank cover until the prop (5) is resting on the recovery tank (**Fig.7**).

RECOMMENDED MAINTENANCE OPERATIONS

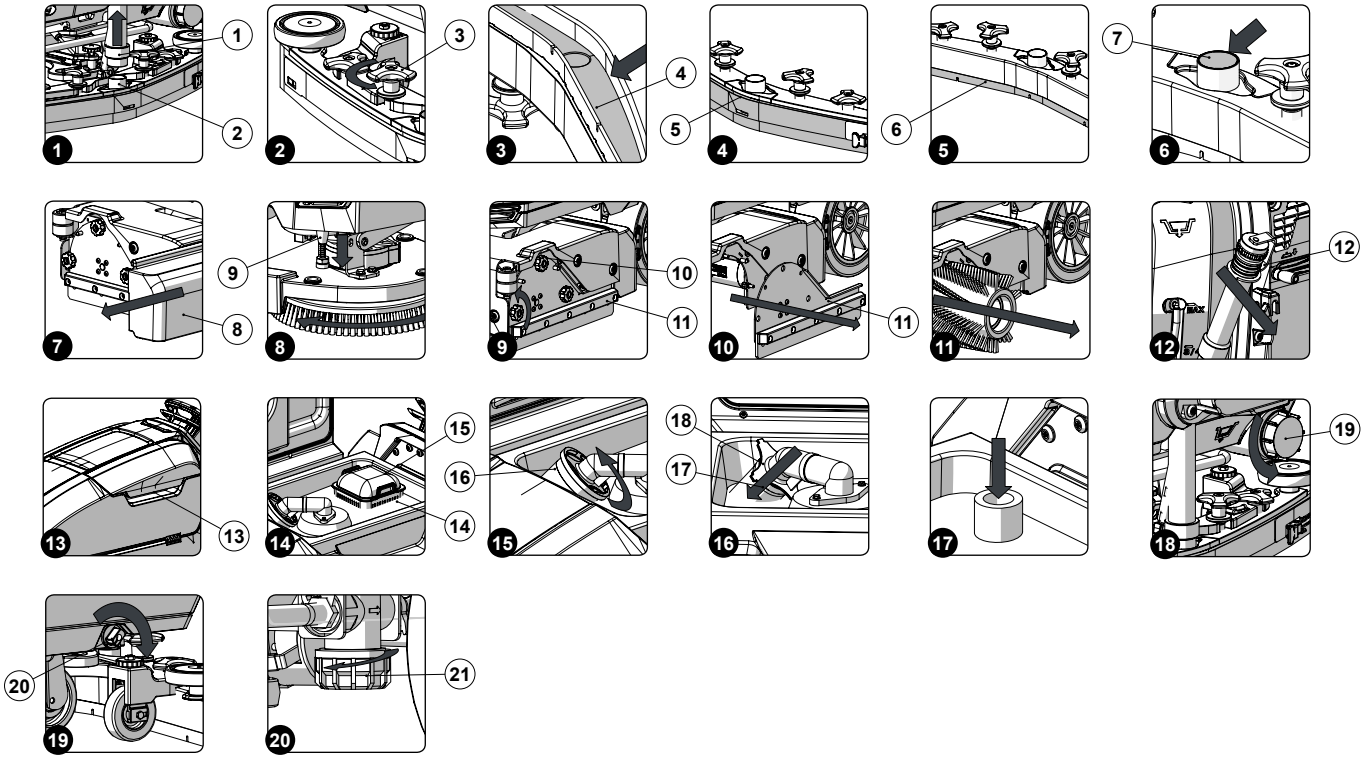

INTERVAL	MACHINE COMPONENTS	PROCEDURE
DAILY; BEFORE A LONG PERIOD OF INACTIVITY	Squeegee	Clean the vacuum chamber; the squeegee rubber blades; the vacuum nozzle (see “CLEANING THE SQUEEGEE BODY”).
	Debris hopper	Empty the debris hopper and clean inside (see “CLEANING THE DEBRIS HOPPER (SWEEPING VERSION)”).
	Brush head brushes	Clean the brushes on the brush head body (see “CLEANING THE BRUSH HEAD BODY BRUSHES (SCRUBBING VERSION)”).
		Clean the brushes on the brush head body (see “CLEANING THE BRUSH HEAD BODY BRUSHES (SWEEPING VERSION)”).
	Recovery tank	At the end of every working day, empty the recovery tank (read “EMPTYING THE RECOVERY TANK”).
		At the end of every working day, after having emptied the recovery tank, clean the vacuum system filters (see “CLEANING THE RECOVERY TANK FILTERS”).
		At the end of every working day, after having emptied the recovery tank, clean the vacuum tube (see “CLEANING THE VACUUM TUBE”).
	Solution tank	At the end of every working day, empty the solution tank (read “EMPTYING THE SOLUTION TANK”).
WEEKLY	Machine water system	Clean the filter in the machine's water system (see “CLEANING THE WATER SYSTEM FILTER”).
	Squeegee rubber blades	Check that the rubber blades on the squeegee body are intact and inspect for wear; if necessary, replace these (see “REPLACING THE SQUEEGEE BODY RUBBER BLADES”).
	Brush head brushes	Check that the brushes on the brush head body are intact and inspect for wear; if necessary, replace these (see “REPLACING THE BRUSH HEAD BODY BRUSHES (SCRUBBING VERSION)”.
		Check that the brushes on the brush head body are intact and inspect for wear; if necessary, replace these (see “REPLACING THE BRUSH HEAD BODY BRUSHES (SWEEPING VERSION)”.
MONTHLY	Squeegee rubber blade levelling	Check that the rubber blades on the squeegee body are level and if necessary, adjust these (see “ADJUSTING THE SQUEEGEE BODY RUBBER BLADES”).

Before performing any routine or extraordinary maintenance operation, proceed as follows:

1. Take the machine to the maintenance area.

N.B.: the place given over to this operation must comply with current environmental protection regulations.

2. Make sure the machine is in a safe condition (see chapter "MACHINE SAFETY MEASURES").

CAUTION: it is recommended to wear the appropriate PPE (Personal Protective Equipment), suitable for the work to be carried out.

CLEANING THE SQUEEGEE BODY

The careful cleaning of the whole vacuum unit ensures better drying and cleaning of the floor as well as a longer vacuum motor life. To carry out the cleaning of the squeegee body, proceed as follows:

1. Remove the vacuum hose (1) from the vacuum nozzle (2) on the squeegee unit (**Fig.1**).
2. Completely unscrew the knobs (3) on the squeegee body pre-assembly (**Fig.2**).
3. Remove the squeegee body from the slits in the squeegee connector.
4. Thoroughly clean the squeegee body vacuum chamber (4) with a jet of water, and then with a damp cloth (**Fig.3**).

N.B.: The place this operation is carried out should comply with current environmental protection regulations.

5. Thoroughly clean the squeegee body rear rubber blade (5) with a jet of water, and then with a damp cloth (**Fig.4**).
6. Thoroughly clean the squeegee body front rubber blade (6) with a jet of water, and then with a damp cloth (**Fig.5**).
7. Use a jet of water and then a damp cloth to thoroughly clean the vacuum nozzle (2) (**Fig.6**).
8. Proceed in the opposite order to reassemble all the parts.

N.B.: Check the wear of the rear rubber blade (5) on the squeegee body; if the edge of the rubber in contact with the floor is worn, replace it. Refer to "REPLACING THE SQUEEGEE BODY RUBBER BLADES".

N.B.: Check the wear of the front rubber blade (6) on the squeegee body; if the edge of the rubber in contact with the floor is worn, replace it. Refer to "REPLACING THE SQUEEGEE BODY RUBBER BLADES".

CLEANING THE DEBRIS HOPPER (SWEEPING VERSION)

To clean the debris hopper, proceed as follows:

1. Use the moulded handle to extract the debris hopper (8) (**Fig.7**) and empty it.

N.B.: The place this operation is carried out should comply with current environmental protection regulations.

2. Clean the inside with a jet of water, and use a brush to remove any residual impurities if necessary.
3. Proceed in the opposite order to reassemble all the parts.

CLEANING THE BRUSH HEAD BRUSHES (SCRUBBING VERSION)

Careful cleaning of the brush guarantees better cleaning of the floor, as well as a longer brush head gearmotor lifespan. To clean the brush, proceed as follows:

1. Go to the front of the machine.
2. Press the brush-holder plate retainer (9) and simultaneously rotate the brush in the direction shown in the image (**Fig.8**).

ATTENTION: Fig.8 shows the rotation direction of the left-hand brush.

3. When brush rotation is prevented, turn until the button on the brush is disengaged from the coupling spring on the brush-holder plate.
4. Repeat the same operation for the right-hand brush.
5. Clean the brush under running water to remove any impurities from its bristles.
6. See "INSTALLING THE BRUSH (SCRUBBING VERSION)" for instructions on refitting the brushes in the brush head body.

N.B.: Check that the bristles are not worn; in the event of excessive wear, replace the brush (the bristles should be at least 10 mm long). See "REPLACING THE BRUSH (SCRUBBING VERSION)" to replace the brush.

CLEANING THE BRUSH HEAD BRUSHES (SWEEPING VERSION)

Careful cleaning of the brush guarantees better cleaning of the floor, as well as a longer brush head gearmotor lifespan. To clean the brush, proceed as follows:

1. Go to the front of the machine.
2. Remove the knobs (10) that fix the left-hand side carter (11) in place by turning anti-clockwise (**Fig.9**).
3. Remove the left lateral carter (11) (**Fig.10**).
4. Extract the brush from the tunnel (**Fig.11**).
5. Repeat the same operation for the right-hand brush.
6. Clean the brush under running water to remove any impurities from its bristles.

7. See “INSTALLING THE BRUSH (SWEEPING VERSION)” for instructions on refitting the brushes in the brush head body.

N.B.: Check that the bristles are not worn; in the event of excessive wear, replace the brush (the bristles should be at least 10 mm long). See "REPLACING THE BRUSH (SWEEPING VERSION)" to replace the brush.

DRAINING THE RECOVERY TANK

Proceed as follows to empty the recovery tank:

1. Release the recovery tank drainage tube (12) (at the back of the machine) from the retainers (**Fig.12**).
2. Bend the end of the drainage tube, so as to create a choke and prevent the contents from coming out, put the tube on the discharge surface, unscrew the cap and gradually release the tube.

N.B.: The place this operation is carried out should comply with current environmental protection regulations.

3. Repeat the operations in reverse order to reassemble all the parts.

CLEANING THE RECOVERY TANK FILTERS

To clean the recovery tank (without the optional tank cleaning kit), proceed as follows:

1. Grip the handle (13) on the left-hand side of the recovery tank (**Fig.13**) and turn the tank cover as far as it will go, until it reaches the maintenance position.
2. Remove the dirty water basket/filter (14) from the support (**Fig.14**).
3. Remove the basket cover and clean the basket/filter and the basket cover (15) under a jet of running water.

N.B.: Use a spatula or brush to eliminate any dirt that is particularly difficult to remove.

4. Use a cloth to dry the basket/filter and basket cover, and place them back inside the recovery tank.
5. Remove the filter protection cup (16), turning it in the direction of the arrow (**Fig.15**).
6. Remove the vacuum motor filter (17), taking care not to lose the support tie (18) inside the recovery tank (**Fig.16**).
7. Rinse both the cup and the filter carefully under running water.

N.B.: Use a spatula or brush to eliminate any dirt that is particularly difficult to remove.

8. Rinse the inside of the recovery tank with a jet of water. If necessary, use a spatula to remove any sludge that may have accumulated at the bottom of the tank.
9. Repeat the operations in reverse order to reassemble all the parts.

CLEANING THE VACUUM TUBE

Careful cleaning of the vacuum hose guarantees better cleaning of the floor as well as a longer vacuum motor life. Proceed as follows to clean the vacuum hose:

1. Grip the handle (13) on the left-hand side of the recovery tank (**Fig.13**) and turn the tank cover as far as it will go, until it reaches the maintenance position.
2. Remove the dirty water basket/filter (14) from the support (**Fig.14**).
3. Rinse the inside of the vacuum tube with a jet of running water (**Fig.17**).
4. Repeat the operations in reverse order to reassemble all the parts.

EMPTYING THE SOLUTION TANK

Proceed as follows to empty the solution tank:

1. Unscrew the cap (19) for the solution tank dumping system (**Fig.18**); the cap is located at the rear of the machine.
2. With the solution tank empty, rinse the inside of the solution tank with a jet of running water.

CLEANING THE WATER SYSTEM FILTER

In order to clean the water system's filter, do the following:

1. Block the tap outflow, rotating the knob (20) in the direction of the arrow (**Fig.19**).
2. Go to the left-hand side of the machine and loosen the detergent solution filter cap (21) (**Fig.20**).
3. Remove the filter cartridge and rinse under a jet of water, using a brush to eliminate any impurities if necessary.
4. Once the filter cartridge is clean, repeat the operations in the opposite order to reassemble all the parts.

EXTRAORDINARY MAINTENANCE WORK

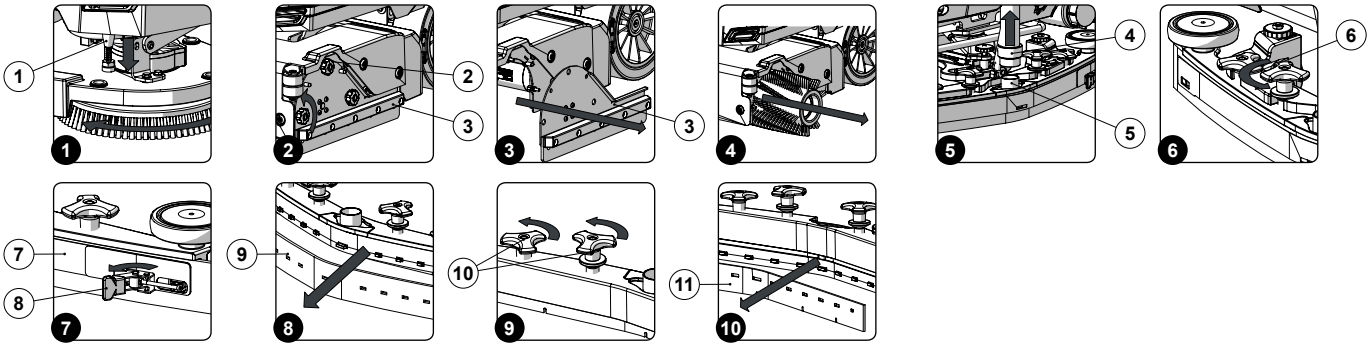

REPLACING THE BRUSH (SCRUBBING VERSION)

The good condition of the brush guarantees better cleaning of the floor, as well as a longer brush head gearmotor lifespan. To replace the brush, proceed as follows:

1. Go to the front of the machine.
2. Replace the worn brush with a new one.
3. Press the brush-holder plate retainer (1) and simultaneously rotate the brush in the direction shown in the image (**Fig.1**).

ATTENTION: Fig.1 shows the rotation direction of the left-hand brush.

4. When brush rotation is prevented, turn until the button on the brush is disengaged from the coupling spring on the brush-holder plate.
5. Repeat the same operation for the right-hand brush.
6. See "INSTALLING THE BRUSH (SCRUBBING VERSION)" for instructions on refitting the brushes in the brush head body.

REPLACING THE BRUSH (SWEEPING VERSION)

The good condition of the brush guarantees better cleaning of the floor, as well as a longer brush head gearmotor lifespan. To replace the brush, proceed as follows:

1. Go to the front of the machine.
2. With the brush head raised from the floor, turn the knobs (2) that hold the left lateral carter (3) in place anti-clockwise (**Fig.2**).
3. Remove the left lateral carter (3) (**Fig.3**).
4. Extract the brush from the tunnel (**Fig.4**).
5. Repeat the same operation for the right-hand brush.
6. See "INSTALLING THE BRUSH (SWEEPING VERSION)" for instructions on refitting the brushes in the brush head body.

REPLACING THE SQUEEGEE BODY RUBBER BLADES

Ensuring the integrity of the squeegee body's rubber blades guarantees better floor cleaning and drying results, as well as a longer service life for the vacuum motor. In order to replace the squeegee body's rubber blades, do the following:

1. Remove the vacuum hose (4) from the vacuum nozzle (5) on the squeegee body (**Fig.5**).
2. Completely unscrew the knobs (6) on the squeegee body pre-assembly (**Fig.6**).
3. Remove the squeegee body from the slits in the squeegee connector.

To remove the rear squeegee rubber blade, proceed as follows:

- Remove the rear rubber blade compression plate (7), and release the stop (8) at the rear of the squeegee (**Fig.7**).
- Remove the rear rubber blade (9) from the squeegee body (**Fig.8**).
- Replace the worn rubber blade with a new one.

N.B.: The rubber blade can be rotated symmetrically to be used more than once.

- Repeat the operations in reverse order to reassemble all the parts.

To remove the front squeegee rubber blade, proceed as follows:

- Completely unscrew the knobs (10) on the squeegee body pre-assembly (**Fig.9**); this will cause the internal squeegee body to move downwards, and the front rubber blade can then be removed.
- Remove the front rubber blade (11) from the squeegee's internal body (**Fig.10**).
- Replace the worn rubber blade with a new one.

N.B.: The rubber blade can be rotated symmetrically to be used more than once.

- Repeat the operations in reverse order to reassemble all the parts.

N.B.: Before using the machine, remember to adjust the squeegee body: see the section titled "ADJUSTING THE SQUEEGEE BODY'S RUBBER BLADES".

N.B.: It is recommended to replace both squeegee body blades in order to ensure good results when drying the floor.

ADJUSTMENT INTERVENTIONS

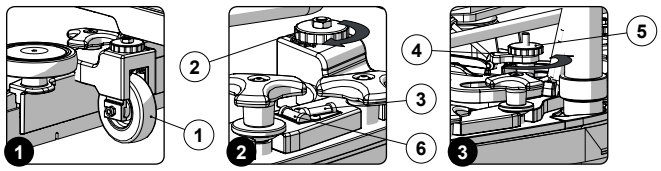

ADJUSTING THE SQUEEGEE BODY'S RUBBER BLADES

The careful adjustment of the squeegee body rubber blades guarantees better cleaning of the floor.
To adjust the height of the squeegee body:

1. The distance of the squeegee rubber blades from the floor can be adjusted by changing the distance between the wheels (1) located on the squeegee support and the floor itself (**Fig.1**).
2. To adjust the height of the wheels, simply use the adjustment knobs (2) located on the squeegee support (**Fig.2**).

N.B.: To decrease the distance between the wheels and the floor, simply turn the adjustment levers (2) in the direction indicated by the arrows with the sign "-", while to increase the distance just follow the arrows with the "+" sign.

N.B.: By decreasing the distance between the squeegee support and the floor, the rubber blades present in the squeegee's body move closer to the floor.

N.B.: For effective drying, the wheels must be at the same distance from the floor.

N.B.: Check for proper adjustment by looking at the instrument (3) positioned on the squeegee body (**Fig.2**).

Adjusting the tilt of the squeegee body:

3. The angle of incline of the squeegee body is adjusted by rotating the lever (4) located on the squeegee support (**Fig.3**).
4. To adjust the inclination of the squeegee body, loosen the knob (5) and tighten or loosen the lever (4) (**Fig.3**), until the squeegee body rubber blades are bent towards the outside evenly along the entire length by about 30° with respect to the floor.

N.B.: Check for proper adjustment by looking at the instrument (6) positioned on the squeegee body (**Fig.2**).

N.B.: Moving the lever (4) clockwise will raise the central part of the squeegee body from the floor.

5. Once the adjustment has been completed, tighten the knob (5).

CHOOSING AND USING BRUSHES

POLYPROPYLENE BRUSH (PPL)
Used on all types of floors. Good resistance to wear and tear, and hot water (no greater than 50°C.). PPL is non-hygroscopic and therefore retains its characteristics even when working in wet conditions.

ABRASIVE BRUSH
The bristles of this type of brush are charged with highly aggressive abrasives. It is used to clean very dirty floors. To avoid floor damage, work only with the pressure strictly necessary.

BRISTLE THICKNESS
Thicker bristles are more rigid and are therefore used on smooth floors or floors with small joints.
On uneven floors or those with deep joints, it is advisable to use softer bristles which can enter the gaps more easily.
Remember that when the bristles are worn and therefore too short, they will become rigid and are no longer able to penetrate and clean deep down. In this case, like with over-large bristles, the brush tends to jump.

PAD HOLDER
The pad holder is recommended for cleaning shiny surfaces.
There are two types of pad holder:

1. The traditional pad holder is fitted with a series of anchor points that allow the abrasive floor pad to be held and dragged while working.
2. the CENTRE LOCK type pad holder not only has anchor points, but also a snap-type central locking system in plastic that allows the abrasive floor pad to be perfectly centred and held without any risk of it becoming detached. This type of pad holder is recommended above all for machines with more than one brush, where the centring of the abrasive discs is difficult.

MACHINE	CODE	QTY	BRISTLE	NOTES
MxL 65 Bt	422189	2	PPL 0.3	BLUE BRUSH
	422971	2	PPL 0.6	WHITE BRUSH
	422972	2	PPL 0.9	BLACK BRUSH
	422981	2	ABRASIVE	GREY BRUSH
	422973	2	-	PAD HOLDER
MxL 75 Bt	414272	2	PPL 0.3	BLUE BRUSH
	414270	2	PPL 0.6	WHITE BRUSH
	414273	2	PPL 0.9	BLACK BRUSH
	414271	2	ABRASIVE	GREY BRUSH
	405508	2	-	PAD HOLDER
MxL 85 Bt	445562	2	PPL 0.3	BLUE BRUSH
	445563	2	PPL 0.6	WHITE BRUSH
	445564	2	PPL 0.9	BLACK BRUSH
	445565	2	ABRASIVE	GREY BRUSH
	421819	2	-	PAD HOLDER
MxL 70 Bts	449785	2	PPL 0.3	BLUE BRUSH
	448012	2	PPL 0.6	WHITE BRUSH
	448013	2	PPL 0.9	BLACK BRUSH
	448014	2	ABRASIVE	GREY BRUSH

TROUBLESHOOTING

This chapter lists the most common problems linked with the use of the machine. If you are unable to resolve the problems with the information given here, please contact your nearest assistance centre.

PROBLEM	POSSIBLE CAUSE	SOLUTION
THE MACHINE DOES NOT START	The main switch is set to “0”.	Make sure the main switch is on “I”. If it isn't, turn the key clockwise.
	Check that when switched on there are no alarm messages on the command display.	Stop the machine immediately and contact the technician of the specialised service centre, or press the SOS button if the HFM kit is installed.
	Make sure that the batteries are correctly connected to each other and that the battery connector is connected to the electrical system connector.	Connect the batteries correctly inside the machine (see INSERTING THE BATTERIES IN THE MACHINE”).
	Check the charge level of the batteries.	If the battery charge level is critical, perform a complete recharge cycle (see paragraph CHARGING THE BATTERIES”).
THE BATTERIES ARE NOT CHARGED CORRECTLY (VERSIONS WITH AN ON BOARD BATTERY CHARGER)	The plug on the battery charger's cable is not correctly inserted into the socket on the battery charger itself.	Reconnect the battery charger's power cable.
	The plug on the battery charger's power cable is not correctly inserted into the electrical outlet.	Check that the battery charger power supply cable plug is connected to the mains socket.
	The characteristics of the mains power supply do not correspond to those required by the battery charger.	Check that the characteristics in the battery charger plate are the same as those of the mains supply.
	The LEDs of the battery charger blink repeatedly.	Referring to the battery charger use and maintenance manual, check the meaning of the flashing signals that the battery charger emits dung the battery recharge stage.
THE MACHINE HAS A VERY LOW WORK AUTONOMY	Check the battery charge level, check the symbol on the command display.	If the battery charge level is critical, perform a complete recharge cycle (see "RECHARGING THE BATTERIES”).
THE MACHINE DOES NOT MOVE	The machine does not start.	Read the section “THE MACHINE DOES NOT START”.
	There is an issue on the drive pedal.	Contact your nearest service centre.

PROBLEM	POSSIBLE CAUSE	SOLUTION
NOT ENOUGH DETERGENT SOLUTION ON THE BRUSH	The quantity of detergent solution in the water system is not sufficient for the work to be carried out.	Check that the amount of detergent solution present in the machine's water system is sufficient for the work to be carried out.
	Detergent solution filter obstructed.	Check the detergent solution filter isn't obstructed. If it is, clean it (see "OCLEANING THE WATER SYSTEM FILTER").
THE MACHINE DOES NOT CLEAN CORRECTLY	The machine does not start.	Read the section "THE MACHINE DOES NOT START".
	Not enough detergent solution comes out.	Read the section "NOT ENOUGH DETERGENT SOLUTION ON THE BRUSH".
	The brushes have not been inserted correctly in the machine.	Check that the disc brushes are correctly inserted into the machine (see "ASSEMBLING THE BRUSH (SCRUBBING VERSION)" or "ASSEMBLING THE BRUSH (SWEEPING VERSION)").
	The type of brush used is not suitable for the dirt to be cleaned.	Make sure that the brushes fitted on the machine are suitable for the work to be carried out. Read "CHOOSING AND USING THE BRUSHES".
	The brush bristles are excessively worn.	Check the wear of the brush and if necessary replace it (see "REPLACING THE BRUSH (SCRUBBING VERSION)" or "REPLACING THE BRUSH (SWEEPING VERSION)").
THE SQUEEGEE DOES NOT DRY PERFECTLY	The vacuum unit is obstructed.	Make sure the squeegee is free of obstructions (read "CLEANING THE SQUEEGEE BODY").
		Make sure the vacuum tube is free of obstructions (see "CLEANING THE VACUUM TUBE").
		Make sure the vacuum cap filter is free of obstructions (see "CLEANING THE RECOVERY TANK FILTERS").
		Make sure the vacuum motor filter is free of obstructions (see "CLEANING THE RECOVERY TANK FILTERS").
	The cap on the recovery tank drainage tube is not properly positioned.	Check that the cap on the recovery tank drainage tube is positioned properly.
	The recovery tank lid is not positioned correctly.	Check that the recovery tank lid is properly positioned on the machine.
EXCESSIVE FOAM PRODUCTION	The detergent being used is not suitable.	Check that a low foam detergent has been used. If necessary, add a small quantity of anti-foam liquid to the recovery tank.
	The floor is not very dirty.	Dilute the detergent more.
THE MACHINE DOES NOT VACUUM CORRECTLY	The recovery tank is full.	Empty the recovery tank (read "EMPTYING THE RECOVERY TANK").
	The vacuum device is obstructed	Read the section "THE SQUEEGEE DOES NOT DRY PERFECTLY".

EC DECLARATION OF CONFORMITY

The undersigned manufacturer:

FIMAP S.p.A.

Via Invalidi del Lavoro, 1

37059 Santa Maria di Zevio (VR)

declares under its sole responsibility that the products

FLOOR SCRUBBING MACHINES

mod. MxL 65 Bt - MxL 75 Bt - MxL 85 Bt - MxL 70 Bts

comply with the provisions of Directives:

- 2006/42/EC: Machinery Directive.
- 2014/30/EC: Electromagnetic compatibility directive.

They also comply with the following standards:

- EN 60335-1:2012/A11:2014
- EN 60335-2-72:2012
- EN 12100:2010
- EN 61000-6-2:2005/AC:2005
- EN 61000-6-3:2007/A1:2011/AC:2012
- EN 62233:2008/AC:2008

The person authorized to compile the technical file:

Mr. Giancarlo Ruffo

Via Invalidi del Lavoro, 1

37059 Santa Maria di Zevio (VR) - ITALY

Santa Maria di Zevio (VR), 14/01/2019

Comac S.p.A.

Legal representative

Giancarlo Ruffo

The undersigned manufacturer:

FIMAP S.p.A.

Via Invalidi del Lavoro, 1

37059 Santa Maria di Zevio (VR)

declares under its sole responsibility that the products

FLOOR SCRUBBING MACHINES

mod. MxL 65 Bt CB - MxL 75 Bt CB - MxL 85 Bt CB - MxL 70 Bts CB

comply with the provisions of Directives:

- 2006/42/EC: Machinery Directive.
- 2014/35/EC: Low Voltage Directive.
- 2014/30/EC: Electromagnetic compatibility directive.

They also comply with the following standards:

- EN 60335-1:2012/A11:2014
- EN 60335-2-72:2012
- EN 12100:2010
- EN 60335-2-29:2004/A2:2010
- EN 61000-6-2:2005/AC:2005
- EN 61000-6-3:2007/A1:2011/AC:2012
- EN 61000-3-2:2014
- EN 61000-3-3:2013
- EN 55014-1:2006/A1:2009/A2:2011
- EN 55014-2:2015
- EN 62233:2008/AC:2008

The person authorized to compile the technical file:

Mr. Giancarlo Ruffo
Via Invalidi del Lavoro, 1
37059 Santa Maria di Zevio (VR) - ITALY

Santa Maria di Zevio (VR), 14/01/2019

Comac S.p.A.
Legal representative
Giancarlo Ruffo