OPERATOR MANUAL

HDS35

Heavy Duty Walk-Behind Industrial Scrubber

1800 100 150
sales@conquesteg.com
conquesteg.com

CONQUEST
With you, all the way

The descriptions contained in this document are not binding.
The company therefore reserves the right to make any modifications at any time to elements, details, or accessory supply, as considered necessary for reasons of improvement or manufacturing/commercial requirements.
The reproduction, even partial, of the text and drawings contained in this document is prohibited by law.

The company reserves the right to make any technical and/or supply modifications. The images are for reference purposes only, and are not binding in terms of design and supply.

Symbols used in the manual

	Open book symbol with an "i" Indicates the need to consult the instruction manual
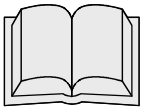	Open book symbol Used to tell the operator to read the manual before using the machine
	Warning symbol Carefully read the sections marked with this symbol and observe the indications, for the safety of the operator and the machine
	Warning symbol Indicates danger of gas exhalation and leakage of corrosive liquids
	Warning symbol Danger of fire: do not go near with free flames
	Disposal symbol Carefully read the sections marked with this symbol, for machine disposal

CONTENTS

ON CONSIGNMENT OF THE MACHINE **4**
SERIAL NUMBER PLATE **4**
INTRODUCTORY COMMENT **4**
INTENDED USE **4**
TECHNICAL DESCRIPTION **5**
SYMBOLS USED ON THE MACHINE **6**
GENERAL SAFETY REGULATIONS **7**
MACHINE PREPARATION **8**
1. HANDLING THE PACKED MACHINE 8
2. HOW TO UNPACK THE MACHINE 8
3. HANDLING AND TRANSPORTATION OF THE UNPACKED MACHINE 8
4. INSERTING/CONNECTING THE BATTERIES 9
5. CONNECTING THE CONNECTOR 10
6. TYPE OF BATTERY 10
7. BATTERY MAINTENANCE AND DISPOSAL 10
8. CHARGING THE BATTERY (WITH BUILT-IN BATTERY CHARGER) 11
9. BATTERY INDICATOR 12
10. INSTRUMENT PANEL COMPONENTS 12
MACHINE PREPARATION **13**
11. FIXING THE HANDLEBARS 13
12. SOLUTION TANK 13
13. DETERGENT SOLUTION 13
14. RECOVERY TANK 14
15. ASSEMBLING THE BRUSH 14
WORK **15**
1. PREPARING TO WORK 15
2. OVERFLOW DEVICE 15
3. FORWARD MOVEMENTS 15
AT THE END OF THE WORK **16**
DAILY MAINTENANCE **17**
1. CLEANING THE RECOVERY TANK 17
2. CLEANING THE FRONT AND REAR SQUEEGEES 17
3. REPLACING THE SQUEEGEE RUBBERS 18
4. DISASSEMBLING THE BRUSH 18
PERIODIC MAINTENANCE **19**
1. CLEANING THE SQUEEGEE TUBE 19
2. CLEANING THE SOLUTION TANK AND FILTER 19
TROUBLESHOOTING **20**
1. ELECTRICAL SYSTEM SAFETY 20
2. INSUFFICIENT WATER ON THE BRUSHES 20
3. THE MACHINE DOES NOT CLEAN WELL 20
4. THE SQUEEGEE DOES NOT DRY PERFECTLY 20
5. EXCESSIVE FOAM PRODUCTION 20
CHOOSING AND USING THE BRUSHES **21**
MACHINE DISPOSAL **22**
EC DECLARATION OF CONFORMITY **23**

On consignment of the machine

When the machine is delivered to the customer, an immediate check must be performed to ensure all the material mentioned in the shipping documents has been received, and also to check the machine has not been damaged during transportation. If this is the case, the carrier must ascertain the extent of the damage at once, informing our customer service office. It is only by prompt action of this type that the missing material can be obtained, and compensation for damage successfully claimed.

Introductory comment

GENIE B is a floor scrubbing machine which, via the mechanical action of the rotating brush and the chemical action of a water/detergent solution, can clean any type of flooring. As it advances, it also collects the dirt removed and the detergent solution not absorbed by the floor.
The machine must be used only for this purpose. Even the best machines will only work well if used correctly and kept in good working order. We therefore suggest you read this instruction booklet carefully and read it again whenever difficulties arise while using the machine. If necessary, remember that our assistance service (organised in collaboration with our dealers) is always available for advice or direct intervention.

Intended use

The scrubbing machine is designed exclusively for the professional cleaning of surfaces and floors in industrial, commercial and public environments. The machine is only suitable for use in closed (or at least covered) places.

The machine is not suitable for use in the rain, or under water jets. It is FORBIDDEN to use the machine in places with a potentially explosive atmosphere, for picking up dangerous dusts or inflammable liquids. In addition, it is not suitable as a means of transport for people or objects.

Serial number plate

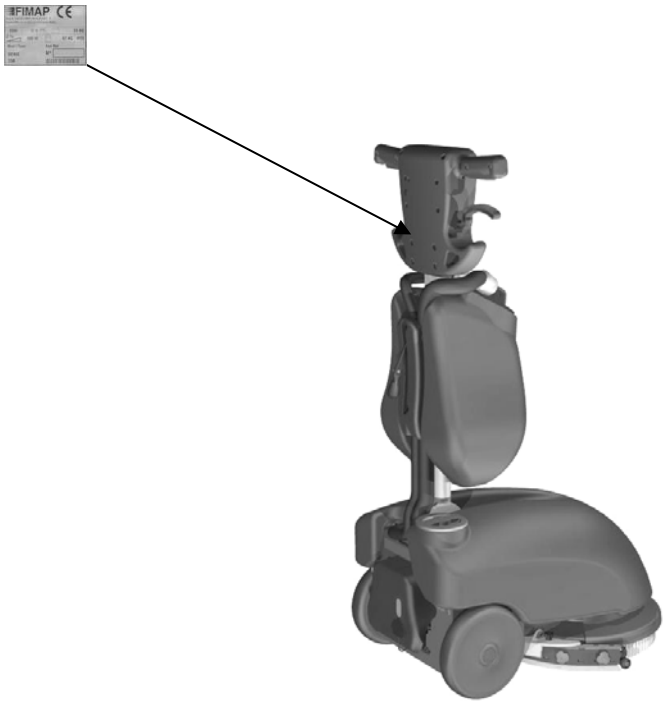

TECHNICAL DESCRIPTION	UM	Genie B
Rated power	W	500
Working width	mm	350
Width of rear squeegee	mm	440
Work capacity	M^2/h	1050
Water consumption	g/m^2	-
Brushes (diameter or length)	∅ mm	350
Brush rotations	rpm	140
Pressure on the brushes	kg	20
Brush motor	V / W	12 / 250
Type of advance		Semi-aut.
Maximum gradient		2%
Suction motor	V / W	12 / 250
Suction vacuum	mbar	-
Solution tank PE	l	10
Recovery tank PE	l	10
Total machine weight (including batteries)	kg	67
Gross weight of the machine ready for use	kg	77
Battery	V/Ah	12 / 65
Battery charger	V/A	12/6
Battery compartment dimensions (Length / Height / Width)	mm / mm / mm	277 / 224 / 172
Machine dimensions (Length / Height / Width)	mm / mm / mm	682 / 1018 / 440
Length of the closed machine (without recovery tank)	mm	795
Height of the closed machine (without recovery tank)	mm	440
Noise level (in compliance with IEC 704/1)	dB (A)	69.28
Vibration level	m/s^2	1.79

SYMBOLS USED ON THE MACHINE

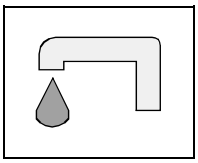

Tap symbol
Used to indicate the solenoid valve switch

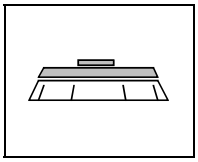

Brush symbol
Used to indicate the brush motor switch

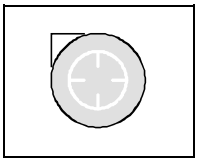

Symbol denoting suction motor
Used to indicate the suction motor switch

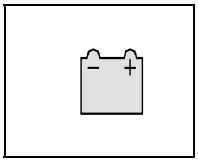

Battery symbol

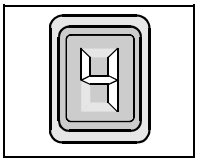

Battery charge level indicator

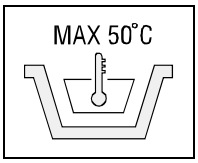

Indicates the maximum temperature of the detergent solution
Located near the solution tank inlet

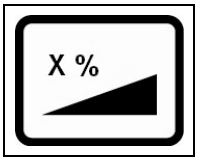

Indicates the maximum gradient

GENERAL SAFETY REGULATIONS

The regulations below must be carefully followed in order to avoid harm to the operator and damage to the machine.

- Read the labels on the machine carefully. Do not cover them for any reason and replace them immediately if they become damaged.
- The machine must be used exclusively by authorised, trained personnel.
- During the working of the machine, pay attention to other people and especially to children.
- The machine is not suitable for cleaning carpets.
- The socket for the battery charger cable must have a prescribed earth connection.
- Avoid damaging the battery charger cable by crushing or bending it, or applying stress.
- If you notice any damage to the battery charger cable, contact a **FIMAP** technical assistance centre immediately.
- Do not mix different types of detergent as this may produce harmful gases.
- Do not place any liquid containers on the machine.
- The machine is designed for dry use only and should not be used or kept outdoors in wet conditions
- The storage temperature must be between -25°C and +55°C; do not store outdoors in damp conditions.
- Conditions of use: room temperature between 0°C and 40°C with relative humidity between 30 and 95%.
- Do not use the machine in an explosive atmosphere.
- Do not use the machine as a means of transport.
- Do not use acid solutions, which may damage the machine.
- Avoid working with the brushes when the machine is standing still, so as not to damage the floor.
- Do not vacuum inflammable liquids.
- Do not use the device to collect dangerous powders.
- In the event of a fire, use a powder extinguisher. Do not use water.
- Do not knock against shelving or scaffolding, where there is a danger of falling objects.
- If you use the machine where there is a risk of falling objects, the machine must be equipped with protection devices against falling objects
- Do not use the machine on surfaces with an inclination greater than the one shown on the plate.
- The machine is designed to carry out the washing and drying operations simultaneously. Different operations should only be carried out in areas where the passage of unauthorised persons is prohibited. Signal the presence of damp floors with suitable signs.
- If the machine does not work properly, check this is not caused by failure to carry out routine maintenance. Otherwise, request the intervention of the **FIMAP** technical assistance centre.
- If you need to replace any components, request the ORIGINAL spare parts from a **FIMAP** dealer and/or Authorised Retailer.
- Before carrying out any maintenance work, switch off the machine and disconnect the battery connector.
- Do not remove any protection devices which require the use of tools in order to be removed.
- Do not wash the machine with direct water jets or with pressurised water, nor with corrosive substances.
- Have the machine checked by a **FIMAP** technical assistance centre every year.
- To prevent the formation of scale in the solution tank filter, do not fill the tank with detergent solution many hours before using the machine.
- Before using the machine, check that all the hatches and covers are positioned as shown in this Use and Maintenance Manual.
- When disposing of consumption materials, observe the laws and regulations in force.
- When your **FIMAP** machine has reached the end of its long working life, dispose of the materials it contains (especially oils and electronic components) in an appropriate manner, and bearing in mind that the machine itself was constructed using 100% recyclable materials.
- Only use the brushes supplied with the device, or those specified in the Use and Maintenance Manual (page 19). The use of other brushes could compromise safety levels.
- The device must be disconnected from the power supply before removing the battery.
- The battery must be removed from the device before this is disposed of.
- The battery and battery charger must be disposed of in a safe manner, scrupulously respecting the laws in force.
- The machine is not suitable for use by children or people with reduced physical, mental and sensorial capacities, or people lacking experience and knowledge, unless supervised and instructed in the use of the machine by a person responsible for their safety.
- Children must be supervised to ensure they do not play with the device.

MACHINE PREPARATION

1. HANDLING THE PACKED MACHINE

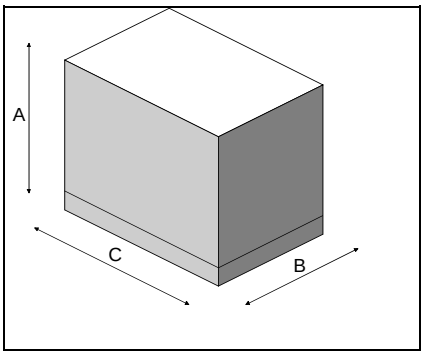

The machine is contained in specific packaging.
Every pallet consists of four machines arranged on two levels.
It is not possible to place more than two packages on top of each other.
The total weight is 70kg
The overall dimensions of the package are:

A : 500mm
B : 500mm
C : 1150mm

2. HOW TO UNPACK THE MACHINE

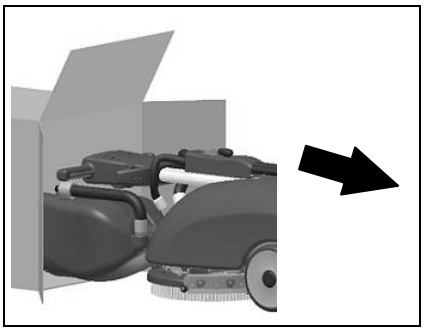

1. Open the packaging on the side indicated.
2. Take the machine out of its packaging.
3. Remove the recovery tank.

3. HANDLING AND TRANSPORTATION OF THE UNPACKED MACHINE

Genie E is a machine that can be managed in all situations and transported without effort, even in small vehicles.
Just lift the front part, using the machine handlebars as a lever. The big rear wheels mean it can be towed anywhere and loaded on a truck by means of a simple ramp.
Genie E is easy to transport even by car. Exploiting the full flexibility of the handlebars, you can fold it up (see the handlebars fixing section) and, with the help of a colleague, place it in the boot of the car without disassembling any components.

4. INSERTING/CONNECTING THE BATTERIES

The machine is supplied with a built-in battery charger and an airtight gel battery. If you use batteries other than those supplied with the machine, use only 12V AGM or Gel batteries and proceed as follows.
The batteries must be housed in the special compartment beneath the solution tank.
To insert the batteries you must:

1. Disconnect the quick connector (1) at the front of the solution tank to avoid breakage of the connector itself
2. Remove the solution tank and place on the ground

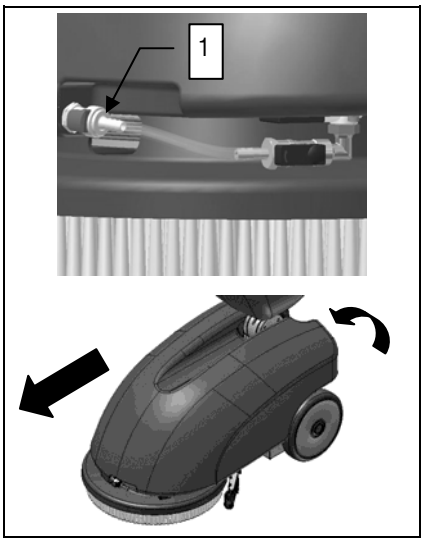

3. Open the two rear hinges (2) that close the battery compartment
4. Rotate the handlebars, raising the handlebar movement lever (see “FIXING THE HANDLEBARS”)
5. Position the battery inside the compartment
6. Connect the cables

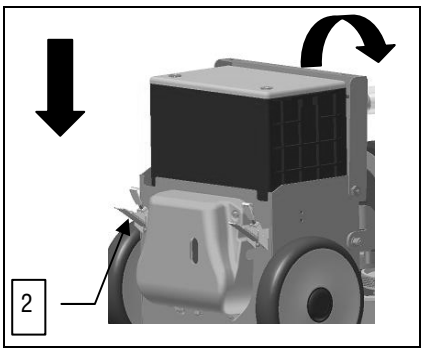

ATTENTION: you are advised to use airtight batteries only, to avoid the leakage of acids!
ATTENTION: you are advised to have the electric connections made by a qualified, COMAC-trained technician

ATTENTION: you are advised to always wear protective gloves, to avoid the risk of serious injury to your hands

ATTENTION: You are advised to only lift and move the batteries with lifting and transportation means suitable for the specific weight and size

5. CONNECTING THE CONNECTOR

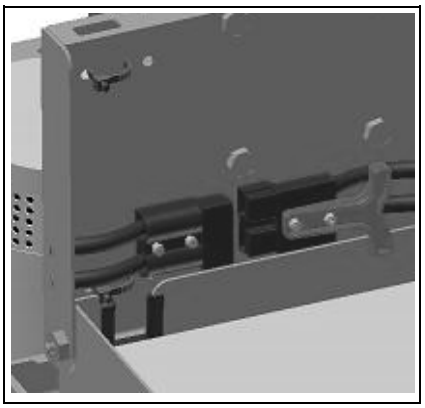

1. Connect the battery connector to the machine connector.
2. reassemble all the elements

WARNING: this process must be carried out by qualified personnel. The incorrect or imperfect connection of the cables to the connector can seriously harm people and damage objects.

6. TYPE OF BATTERY

To power the machine it is necessary to use:

- sealed traction batteries with gasrecombination or gel technology
  OTHER TYPES MUST NOT BE USED.
  The batteries must meet the requisites laid out in standards CEI EN 60254-1:2005-12 (CEI 21-5) + CEI EN 60254-2:2008-06 (CEI 21-7).

Every battery consists of DIN-type elements connected in series and supplying 12 V power to the clamps. You are advised to use batteries with an electric capacity of 65 Ah (C5).

7. BATTERY MAINTENANCE AND DISPOSAL

For maintenance and recharging, respect the instructions provided by the battery manufacturer.
Particular attention must be paid when choosing the battery charger, if not supplied, since there are different kinds according to the type and capacity of the battery.
When the battery reaches the end of its working life, it must be disconnected by expert, trained personnel, then lifted (using the grips and suitable lifting devices) to remove it from the battery compartment. EXHAUSTED BATTERIES ARE CLASSIFIED AS DANGEROUS WASTE AND MUST BE CONSIGNED TO THE AUTHORISED BODIES FOR CORRECT DISPOSAL.

Proceed as follows when the battery is dead:
1. Disconnect the quick connector and remove the solution tank.
2. Open the battery compartment and disconnect the connector.

Remove the battery using suitable devices by lifting with the provided handles.

ATTENTION: you are advised to always wear protective gloves, to avoid the risk of serious injury to your hands

ATTENTION: You are advised to only lift and move the batteries with lifting and transportation means suitable for the specific weight and size

8. CHARGING THE BATTERY (WITH BUILT-IN BATTERY CHARGER)

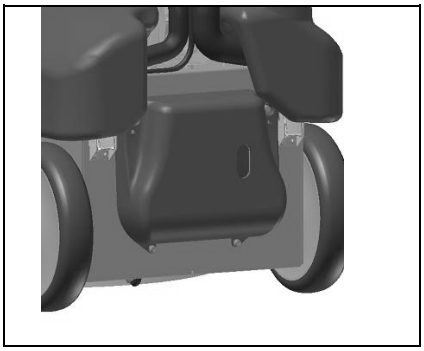

Perform a battery charging cycle before using the machine.

When replacing the battery, be sure to use batteries that are suitable for the battery charger installed (use only 12V AGM or Gel batteries).

In order to recharge the battery:
1. Make sure the recovery tank and the solution tank are empty
2. Move the machine near to the battery charger

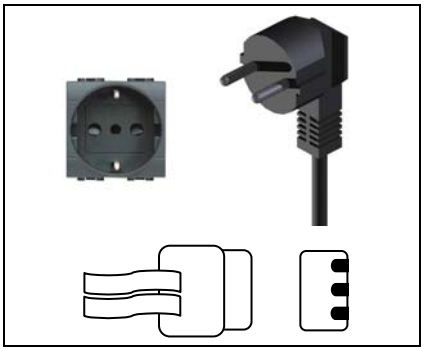

3. Remove the battery charger connector socket protection on the back of the machine (1)
4. Plug the battery charger cable (supplied with the machine) into the liberated socket
5. Plug the battery charger cable into the mains socket
6. For the correct use of the battery charger, follow the instructions in the enclosed booklet

ATTENTION: If one of the three LEDs flashes refer to the battery charger manual supplied with the machine

ATTENTION: the machine is equipped with an automatic system that disconnects the power supply from the electrical system while the batteries are being recharged
ATTENTION: in order not to cause permanent damage to the batteries it is essential to avoid their complete discharge: arrange the recharge within a few minutes of the switching on of the flashing "discharged batteries" signal
ATTENTION: never leave the batteries completely discharged, even if the machine is not being used
ATTENTION: for the daily recharging of the batteries, you must fully respect the indications provided by the manufacturer or retailer. All installation and maintenance operations must be carried out by specialised personnel
WARNING: Do not move the machine when the power cable of the battery charger is connected to the battery charger itself.

ATTENTION: danger of exhalation of gas and leakage of corrosive liquids

ATTENTION: Danger of fire: do not go near with naked flames.

In the event that the charger is not built-in with the machine, read carefully the manual of the charger that is used to recharge.

9. BATTERY INDICATOR

The battery indicator is digital, with 4 fixed positions and a flashing one. The numbers which appear on the display show the approximate charge level.
4 = maximum charge
3 = ¾ charge
2 = 2/4 charge
1 = 1/4 charge
0 = discharged batteries (flashing)

WARNING: a few seconds after the appearance of the flashing “0”, the brush motor switches off automatically. With the remaining charge it is possible to complete the drying process before recharging.

10. INSTRUMENT PANEL COMPONENTS

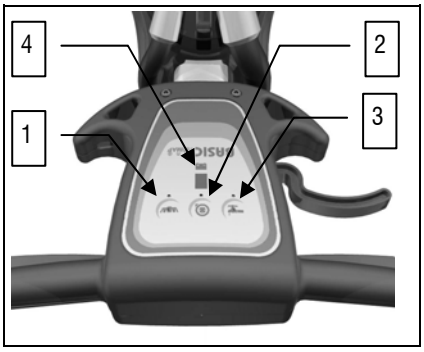

The instrument panel components are identified as follows:
1. Main switch (1)
2. Suction switch (2)
3. Solenoid valve switch (3)
4. Digital battery level indicator (4)

MACHINE PREPARATION

11. FIXING THE HANDLEBARS

For packaging purposes the handlebars are supplied folded; they must now be put in the working position. Proceed as follows:

1. raise the handlebars by pulling upwards the lever indicated by the arrow
2. put the machine in the working position
3. attach the recovery tank to the handlebars tube by means of the two hooks
4. insert the tubes in the connectors that emerge from the recovery tank nut

12. SOLUTION TANK

The recovery tank must be completely empty each time the solution tank is filled.
Check the cap is correctly inserted in its housing (A).
Check the quick connection is correctly connected (B).

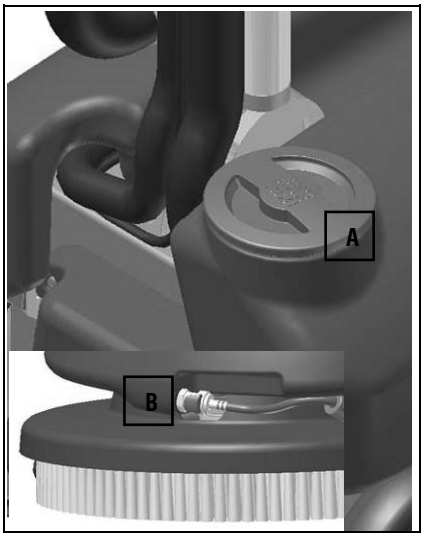

13. DETERGENT SOLUTION

Proceed as follows to fill the solution tank:

1. Make sure that the recovery tank is empty
2. Make sure the main switch is off
3. Remove the inlet cap located on the rear right side of the machine.
4. Fill it with clean water at a temperature not exceeding 50°C.

Add the liquid detergent to the tank in the concentration and manner indicated on the detergent manufacturer's label. The formation of excess foam could damage the suction motor, so use only the minimum amount of detergent necessary.

ATTENTION: Acid or alkaline detergents can be used with pH values between 4 and 10 and that do not contain: oxidising agents, chlorine or bromine, formaldehyde, mineral solvents.

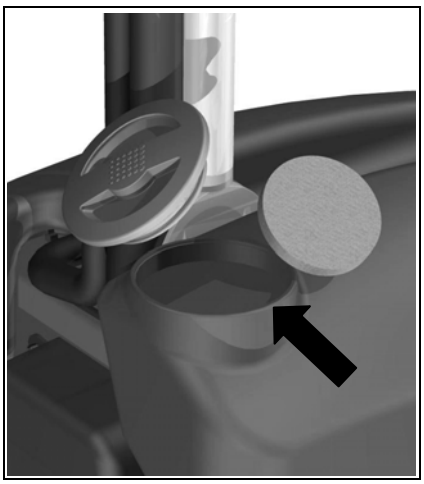

MACHINE PREPARATION

ATTENTION: always use detergents whose manufacturer's label indicates their suitability for scrubbing machines. Do not use acid or alkaline products or solvents without this indication. always use low foam detergent. To avoid the production of foam, before starting to clean, put a minimum quantity of antifoam liquid into the recovery tank. Do not use pure acids**.**

ATTENTION: you are advised to always wear protective gloves, to avoid the risk of serious injury to your hands

14. RECOVERY TANK

Make sure the recovery tank is empty, otherwise empty it completely.
Check the recovery tank is correctly inserted in its housing, and that the tubes are correctly inserted in the tank elbows.
Check the cap is correctly closed.

15. ASSEMBLING THE BRUSH

To insert the brush:

1. Place the brush in front of the base body
2. Raise the base using the handlebars as a lever
3. Place the base above the brush
4. Activate the handlebar tilt lever
5. Press the main switch to turn on the machine
6. Pulse press the man present lever to engage the brush to the base

WORK

1. PREPARING TO WORK

Before fitting the tanks, it is necessary to carry out certain operations:

1. Open the two rear hinges of the battery compartment
2. Connect the connector to the batteries
3. Close the battery compartment
4. Make sure that the recovery tank is empty
5. Position the recovery tank on the handlebars, and connect the two tubes
6. Position the solution tank and connect the quick connector

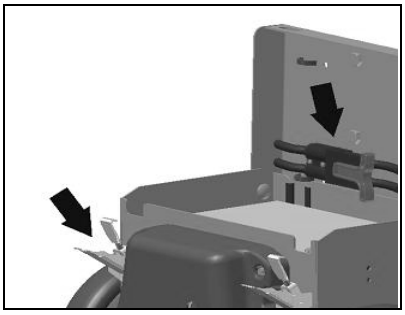

7. carry out the operations to prepare the machine
8. lower the squeegee command lever in order to start working

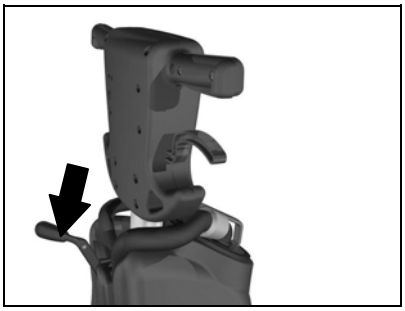

5. press the main switch (1) and check the green indicator light comes on
6. press the suction switch (2)
7. press the solenoid valve switch (3)

At this point, using the operating lever that activates the brushes (4), the machine can work efficiently until the detergent solution runs out or the batteries run flat

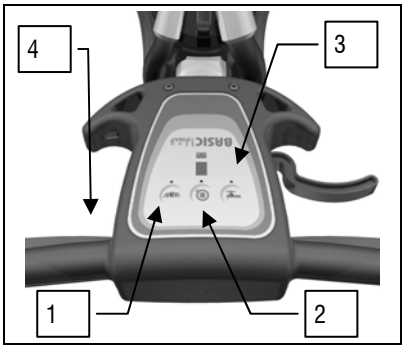

2. OVERFLOW DEVICE

The machine is fitted with a ball filter which intervenes when the recovery tank is full, causing the suction tube to close.
In this case, you must switch off the machine and empty the recovery tank.

WARNING: this operation must be carried out wearing gloves to protect against contact with dangerous solutions.

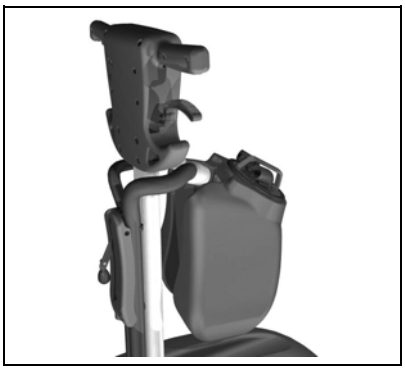

3. FORWARD MOVEMENTS

The traction of these machines is obtained by means of the brush which, working slightly inclined, is able to drag the machine forwards.

ATTENTION: when making even brief reverse movements, check the squeegee is raised.

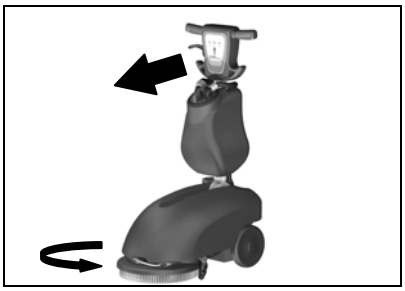

AT THE END OF THE WORK

At the end of the work, and before carrying out any type of maintenance, perform the following operations:

1. Turn off the solenoid valve switch (3)
2. Turn off the suction switch (2)
3. Turn off the brush / main switch (1)

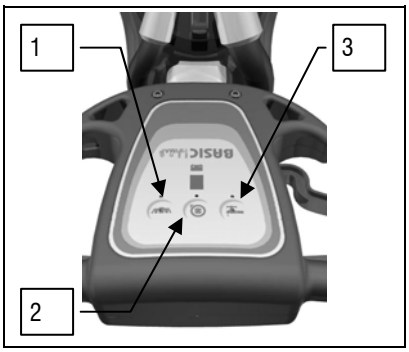

4. Raise the rear handle to lift up the squeegee

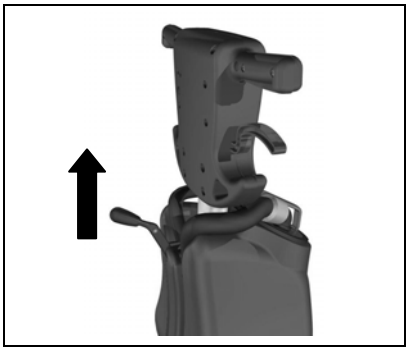

5. Bring the machine to the place provided for draining the water
6. Remove the recovery tank, then remove the bayonet cap and tilt the tank to empty it
7. Remove the solution tank, then remove the filler cap and tilt the tank to empty it
8. disassemble the brush and clean it with a jet of water (to disassemble the brush, see “DISASSEMBLING THE BRUSH” below)

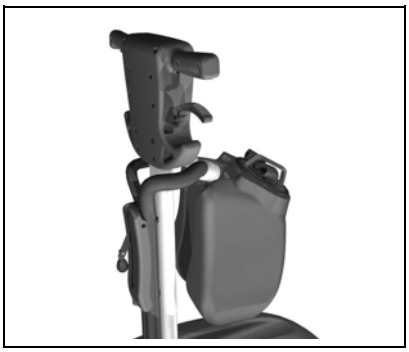

ATTENTION: this operation must be carried out using gloves to protect against contact with dangerous solutions

DAILY MAINTENANCE

PERFORM ALL MAINTENANCE OPERATIONS IN SEQUENCE

1. CLEANING THE RECOVERY TANK

1. Remove the tubes attached to the connectors of the recovery tank cap
2. Disconnect the recovery tank from the handlebars
3. Remove the cap and empty the tank
4. Clean the filter under running water
5. Rinse the tank and clean with a jet of water
6. Reassemble everything

ATTENTION: Before carrying out any type of maintenance, disconnect the machine's battery connector.

ATTENTION: this operation must be carried out using gloves to protect against contact with dangerous solutions

2. CLEANING THE FRONT AND REAR SQUEEGEES

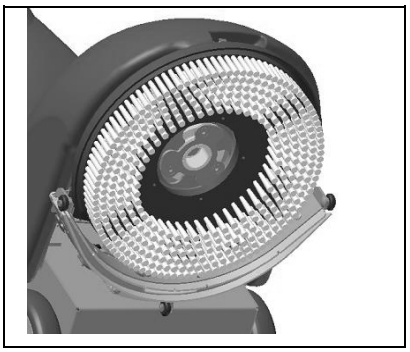

Check the squeegee rubbers are always clean, for a better drying action.
To clean them you must:
1. raise the machine
2. carefully clean the inside
3. carefully clean the squeegee rubbers

ATTENTION: Before carrying out any type of maintenance, disconnect the machine's battery connector.

ATTENTION: this operation must be carried out using gloves to protect against contact with dangerous solutions

3. REPLACING THE SQUEEGEE RUBBERS

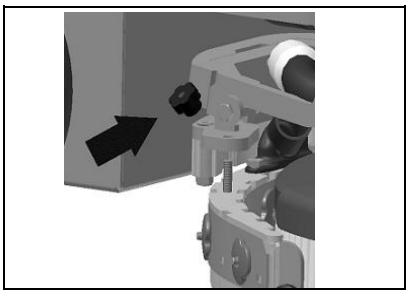

Check the state of wear and tear of the squeegee rubbers and, if necessary, replace them. To replace them you must:

1. Raise the squeegee
2. Remove the two knobs
3. disassemble the squeegee from its support
4. Remove the tube from the squeegee nozzle so the squeegee can be removed

ATTENTION: Before carrying out any type of maintenance, disconnect the machine's battery connector.

ATTENTION: this operation must be carried out using gloves to protect against contact with dangerous solutions

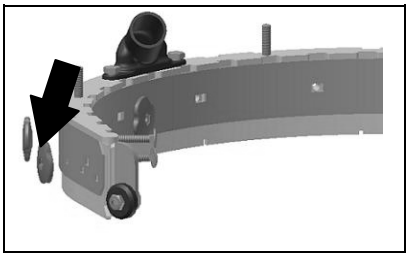

5. Unscrew the knobs on the squeegee that block the rubber-pressing blades and remove them
6. Remove the rubber-pressing blades
7. replace the rubbers
8. reassemble everything, carrying out the above-mentioned operations in the reverse order

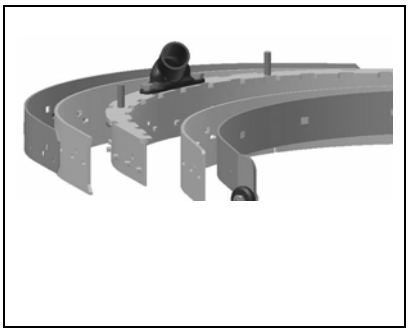

ATTENTION: Before carrying out any type of maintenance, disconnect the machine's battery connector.

ATTENTION: this operation must be carried out using gloves to protect against contact with dangerous solutions

4. DISASSEMBLING THE BRUSH

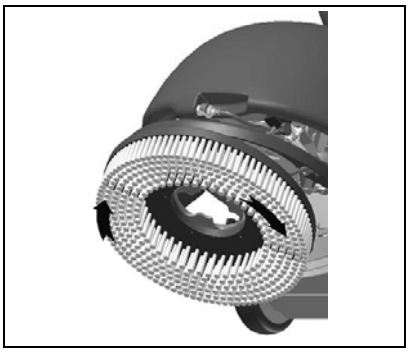

1. Raise the squeegee
2. Raise the machine, using the handlebars as a lever
3. With the base up, activate the brush command with impulses. The brush will be released automatically

ATTENTION: during this operation, check there are no people or objects near the brush.

PERIODIC MAINTENANCE

1. CLEANING THE SQUEEGEE TUBE

Periodically, or whenever suction seems to be unsatisfactory, check the squeegee tube is not obstructed. To clean it, proceed as follows:

1. remove the tube from the sleeve on the squeegee
2. remove the other end from the recovery tank
3. wash the inside of the tube with a water jet introduced from the side where it is connected to the tank
4. reassemble the tube

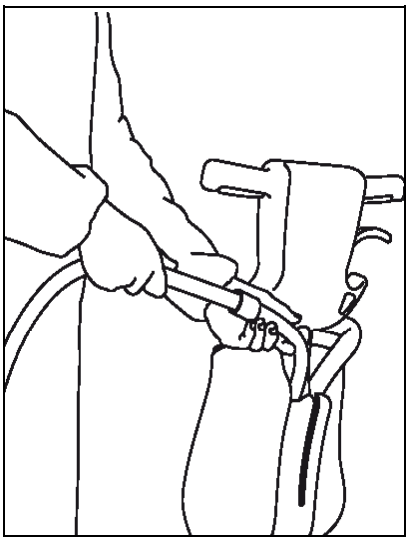

ATTENTION: Do not wash the tube running between the suction unit and the suction cap.

2. CLEANING THE SOLUTION TANK AND FILTER

1. Detach the quick connection (1) to avoid breaking the connection itself.
2. Remove the solution tank.
3. Unscrew the filler cap (2)
4. Remove the filter and clean it (3)
5. Rinse the tank and clean with a jet of water.
6. Reassemble the tank, carrying out the above operations in the reverse order
7. Reassemble the filter and cap.

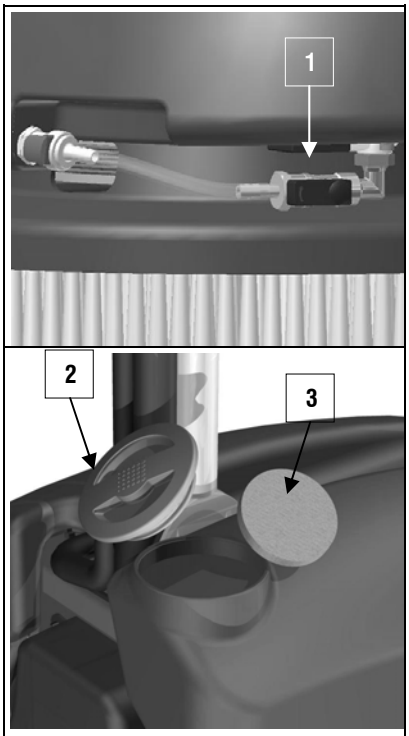

ATTENTION: Before carrying out any type of maintenance, disconnect the machine's battery connector.

ATTENTION: this operation must be carried out using gloves to protect against contact with dangerous solutions

TROUBLESHOOTING

1. ELECTRICAL SYSTEM SAFETY

The machine is fitted with self-restoring safety fuses located in the electric system *beneath the solution tank) that interrupt the power supply to the brush and suction motors when the machine exceeds the predetermined load. To restore the power supply to the motor, switch off the machine and wait for the fuses to cool down (about 40 seconds). If the switch disconnects the current again, contact the **FIMAP** technical assistance centre.

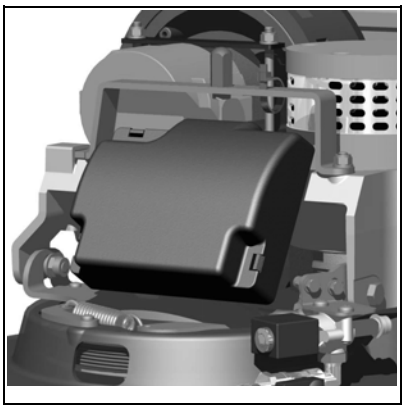

2. INSUFFICIENT WATER ON THE BRUSHES

1. Check the solution tank filter is clean
2. Check the solenoid valve switch is on
3. Check the quick connection is correctly inserted
4. Check the cock regulation screw on the water outlet

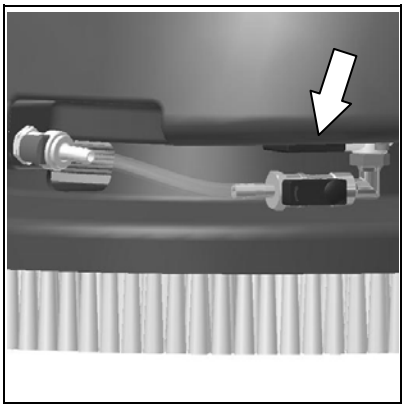

3. THE MACHINE DOES NOT CLEAN WELL

1. Check the state of wear and tear of the brushes and, if necessary, replace them. The brushes should be changed when the bristles are about 15mm long.

4. THE SQUEEGEE DOES NOT DRY PERFECTLY

1. Check the squeegee rubbers are clean.
2. Check the suction tubes are correctly inserted in their housing on the squeegee.
3. Check the distributor is clean.
4. Replace the rubbers, if worn.

5. EXCESSIVE FOAM PRODUCTION

Check that a low foam detergent has been used. If necessary, add a small quantity of antifoam liquid to the recovery tank.
Remember that, when the floor is not very dirty, more foam is generated. In this case the detergent solution should be more diluted.

CHOOSING AND USING THE BRUSHES

POLYPROPYLENE BRUSH (PPL)
Used on all types of floors. Good resistance to wear and tear, and hot water (no greater than 60°C). The Polypropylene brush is non-hygroscopic and therefore retains its characteristics even when working in wet conditions.

PAD HOLDER
The pad holder is recommended for cleaning shiny surfaces.
There are two types of pad holders of the CENTER LOCK type, equipped with a snap-type central locking system in plastic that allows the abrasive floor pads to be perfectly centred and held without any risk of them becoming detached:
1. fitted with a series of anchor points that allow the abrasive floor pad to be held and dragged while working
2. fitted with a series of groups of bristles that allow the abrasive floor pad to be held and dragged while working

TABLE FOR CHOOSING THE BRUSHES

Machine	No.° of brushes	Code	Type of bristles	∅Bristles	∅ Brush	Notes
GENIE B	1	421701 422213 422001	PPL Pad holder – anchor Pad holder – bristles	0.6 0.9	355 355 355	

MACHINE DISPOSAL

To dispose of the machine, take it to a demolition centre or an authorised collection centre.

Before scrapping the machine it is necessary to remove and separate the following materials and send them to the appropriate collection centres in accordance with the environmental hygiene regulations currently in force:

- brush
- filter
- Battery
- electric and electronic parts*

(*) In particular, to scrap the electric and electronic parts, contact your area distributor.

EC DECLARATION OF CONFORMITY

The undersigned company:

FIMAP S.p.A.

Via Invalidi del Lavoro no.1

37050 Santa Maria di Zevio (VR)

declares under its sole responsibility that the

FLOOR SCRUBBER-DRYER mod. GENIE B

complies with the requirements of the following Directives:

- 2006/42/EC: Machinery Directive
- 2006/95/EC: Low Voltage Directive
- 2004/108/EC: Electromagnetic Compatibility Directive and subsequent amendments.

It also complies with the following standards:

- EN 60335-1: Household and similar electrical appliances - Safety. Part 1: Generic standards
- EN 60335-2-72: Household and similar electrical appliances. Part 2: Generic standards for automatic machines for floor treatment for commercial and industrial use
- EN 60335-2-29: Household and similar electrical appliances. Part 2: Special standards for battery chargers.
- EN 12100-1: Machine safety - Fundamental concepts, fundamental principles of design - Part 1: Basic terminology and methodology
- EN 12100-2: Machine safety - Fundamental concepts, fundamental principles of design - Part 2: Technical principles
- EN 55014-1: Electromagnetic compatibility - Regulations for household appliances, electrical devices and similar equipment. Part 1: Emission - Regulation for product family.
- EN 55014-2: Electromagnetic compatibility - Regulations for household appliances, electrical devices and similar equipment. Part 2: Immunity - Regulation for product family.
- EN 55022: Devices for information technology – Radio interference characteristics – Limits and measurement methods.
- EN 61000-6-2: Electromagnetic compatibility (EMC) - Part 6-2: Generic standards – Immunity for industrial environments.
- EN 61000-6-3: Electromagnetic compatibility (EMC) - Part 6-3: Generic standards — Standard emission for residential, commercial and light-industrial environments
- EN 61000-3-2: Electromagnetic compatibility (EMC) - Part 3-2: Limits – Limits for emissions of harmonic current (Equipment with input current ≤ 16 A per phase).
- EN 61000-3-3: Electromagnetic compatibility (EMC) - Part 3-3: Limits – Restriction of voltage variations and flicker in low voltage power supply systems for devices with a rated current ≤ 16 A.
- EN 62233: Household and similar electrical appliances - Electromagnetic fields Methods for evaluation and measurement

The technical documentation is kept by Mr. Giancarlo Ruffo, via Cà Nova Zampieri, n.5 – 37057 San Giovanni Lupatoto (VR) - Italy

Santa Maria di Zevio, 01/10/2010

FIMAP S.p.A.
Legal representative
Giancarlo Ruffo