OPERATOR MANUAL

HDO100-HEPA

Heavy Duty Ride-on Industrial Sweeper

1800 100 150
sales@conquesteg.com
conquesteg.com

CONQUEST
With you, all the way

CONTENTS

CONTENTS **3**
DEFINITION OF LEVELS OF WARNING **5**
GENERAL SAFETY REGULATIONS **5**
GENERAL DESCRIPTION **5**
SYMBOLS USED IN THE MANUAL 6
TECHNICAL DESCRIPTION 6
INTENDED USE 7
SAFETY 7
REGULATIONS 7
SERIAL NUMBER PLATE 8
MAIN MACHINE COMPONENTS **9**
STANDARD COMPONENTS 9
OPTIONAL COMPONENTS 11
TECHNICAL DATA **15**
SYMBOLS USED ON THE MACHINE **16**
LABELS USED ON THE MACHINE **18**
CONTROL STATION **25**
DASHBOARD 25
CONTROL DISPLAY 26
PEDALBOARD 26
PREPARATION OF MACHINE **27**
HANDLING THE PACKAGED MACHINE 27
HOW TO UNPACK THE MACHINE 27
MACHINE SAFETY 29
HOW TO MOVE THE MACHINE 30
TYPE OF BATTERY TO BE USED 31
BATTERY MAINTENANCE AND DISPOSAL 31
INSERTING THE BATTERIES IN THE MACHINE 32
RECHARGING THE BATTERIES 32
ADJUSTMENT OF DRIVING POSITION 34
ASSEMBLING THE CENTRAL BRUSH 35
ASSEMBLING THE SIDE BRUSHES 37
ASSEMBLING THE VACUUM WAND FILTER BAG 37
WORK PREPARATION CHECKLIST **38**
WORKING MODE **39**
TRANSFER WORKING MODE 39
SWEEPING MODE 40
STARTING WORK **41**
BATTERY CHARGE LEVEL INDICATOR 44
HOUR METER 44
EMPTYING THE DEBRIS HOPPER 44
ADDITIONAL FUNCTIONS **46**
VACUUM SYSTEM ACTIVATION/DEACTIVATION 46
FILTER SHAKER ACTIVATION/DEACTIVATION 46
BUZZER 46
EXTRA PRESSURE FUNCTION (CENTRAL BRUSH) 46
EMERGENCY BUTTON 47
BRAKING CONTROL 48
REVERSE GEAR 48
OPTIONAL FUNCTIONS **49**
SERVICE LIGHTS 49
WORKING HEADLIGHTS 49
BLUE SAFETY LIGHT 49
SOS DEVICE 50
VACUUM WAND 50
SIDE BRUSH 51

AT THE END OF THE WORK **52**
MAINTENANCE PLAN **52**
ROUTINE MAINTENANCE **58**
CLEANING THE RUBBER BLADES OF THE FRONT DUST GUARD KIT (OPTIONAL) 58
CLEANING THE RUBBER BLADES OF THE CENTRAL BRUSH DUST GUARD 58
CLEANING THE CENTRAL BRUSH 60
CLEANING THE SIDE BRUSHES 61
CLEANING THE PANEL FILTER 61
CLEANING THE POCKET FILTER (OPTIONAL) 62
CLEANING THE FILTER BAG OF THE INTEGRATED VACUUM CLEANER KIT (OPTIONAL) 62
CLEANING THE INLET AIR FILTER OF THE INTEGRATED VACUUM CLEANER KIT (OPTIONAL) 63
EXTRAORDINARY MAINTENANCE WORK **64**
CENTRAL BRUSH REPLACEMENT 65
ASSEMBLING THE SIDE BRUSHES 66
DISPOSAL **67**
CHOOSING AND USING BRUSHES **67**
TROUBLESHOOTING **69**
THE MACHINE DOES NOT START 69
THE BATTERY BOX IS NOT COMPLETELY CHARGED 69
THE MACHINE HAS A VERY LOW WORK AUTONOMY 69
THE MACHINE DOES NOT MOVE 70
THE MACHINE DOES NOT CLEAN CORRECTLY 70
THE VACUUM SYSTEM DOES NOT VACUUM CORRECTLY 70
THE MACHINE DOES NOT VACUUM CORRECTLY 70
EXCESSIVE DUST PRODUCTION 71
EC DECLARATION OF CONFORMITY **72**
UKCA DECLARATION OF CONFORMITY **75**

DEFINITION OF LEVELS OF WARNING

DANGER: indicates an imminent dangerous situation that, unless avoided, will result in death or serious injuries.

WARNING: Indicates a potentially dangerous situation that, unless avoided, could cause death of serious injury.

ATTENTION: Indicates a potentially dangerous situation that, unless avoided, could cause slight or moderate injuries.

N.B.: instructs the reader to pay particular attention to the topic that follows.

GENERAL SAFETY REGULATIONS

Before using the machine, please read the following document carefully and follow the instructions contained herein, along with the instructions in the document supplied with the machine itself, "GENERAL SAFETY REGULATIONS" (document number 10083659).

GENERAL DESCRIPTION

The descriptions contained in this document are not binding. The company therefore reserves the right to make any modifications at any time to elements, details, or accessory supply, as considered necessary for reasons of improvement or manufacturing/commercial requirements. The reproduction, even partial, of the text and drawings contained in this document is prohibited by law.

The company reserves the right to make any technical and/or supply modifications. The images are for reference purposes only, and are not binding in terms of design and supply.

SYMBOLS USED IN THE MANUAL

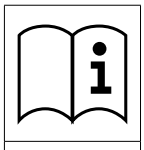

Open book symbol with an "i":
Indicates the need to consult the instruction manual.

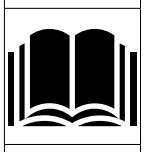

Open book symbol:
Tells the operator to read the user manual before using the device.

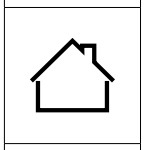

Covered place symbol:
The operations preceded by this symbol must always be carried out in a dry, covered area.

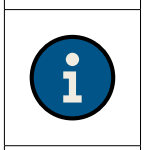

Information symbol:
Indicates additional information for the operator, to improve the use of the device.

Warning symbol:
Carefully read the sections preceded by this symbol meticulously following the instructions indicated for the safety of the operator and the device.

Danger symbol (moving carriages):
Indicates that the packed product should be handled with suitable carriages that conform to legal requirements.

Symbol indicating the compulsory use of protective gloves:
Indicates that the operator should always wear protective gloves, to avoid the risk of serious injury to his hands from sharp objects.

Recycling symbol:
Tells the operator to carry out the operations in compliance with environmental regulations in force in the place where the appliance is being used.

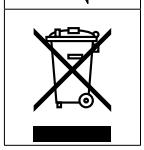

Disposal symbol:
Carefully read the sections marked with this symbol for disposing of the appliance.

TECHNICAL DESCRIPTION

The **FSR7 BASE** is a ride-on sweeping machine powered by batteries with an output voltage of 24V. It is designed to clean tiled, cement or tarmac flooring, both indoors and outdoors.
The **FSR7 BASE** must be used on dry surfaces, but can also work on wet surfaces if necessary as long as the vacuum function is not activated.
This sweeping machine features a central brush for collecting brushed-up material, one or two side brushes for cleaning along edges and in corners, a vacuum system with filter to avoid raising dust, and a debris hopper that is moved manually by the operator.
The machine must be used only for this purpose.

INTENDED USE

This machine is designed and built to clean both indoor and outdoor flooring surfaces in tile, cement and asphalt. They are intended exclusively for professional use by a qualified operator in industrial, commercial and public contexts, in guaranteed safe conditions.

ATTENTION: the sweeping machine is not designed to clean carpets or rugs. It is not suitable for use in closed places and should be used in open but covered areas (it must not be used in the rain or underneath jets of water).

IT IS FORBIDDEN: to use the sweeping machine in places with an explosive atmosphere or to collect hazardous dust or inflammable liquids. In addition, it must not be used for transporting people or objects.

SAFETY

Operator cooperation is paramount for accident prevention. No accident prevention programme can be effective without the full cooperation of the person directly responsible for machine operation. The majority of occupational accidents that happen either in the workplace or whilst moving are caused by failure to respect the most basic safety rules. An attentive, careful operator is most effective guarantee against accidents and is fundamental in order to implement any prevention programme.

REGULATIONS

All references to forwards and backwards, front and rear, right and left indicated in this manual should be understood as referring to the operator in a driving position with his hands on the steering wheel.

SERIAL NUMBER PLATE

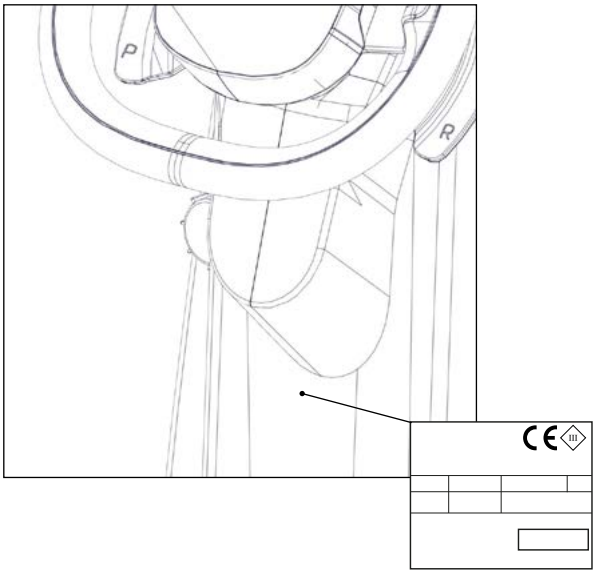

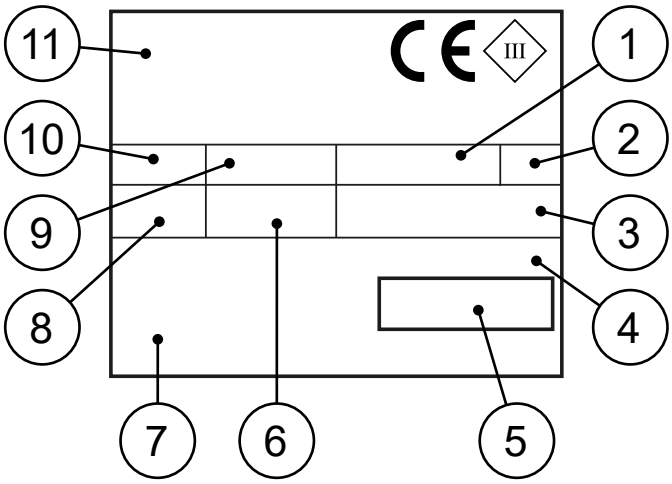

The serial number plate is located near the driver's seat, at the rear of the steering column, and indicates the machine's general characteristics, including its serial number. The serial number is a very important piece of information and should always be provided together with any request for assistance or when purchasing spare parts. The serial number plate contains the following information:

1. The weight of the batteries that power the machine (expressed in kg).
2. The IP protection rating of the machine.
3. The value in Kg of the GVW (Gross Vehicle Weight), see “TECHNICAL DATA” on page 15.
4. The machine ID code.
5. The machine serial number.
6. The machine ID name.
7. The value expressed in W of the nominal power used by the machine, see “TECHNICAL DATA” on page 15.
8. The value expressed in % of the maximum gradeability during work, see “TECHNICAL DATA” on page 15.
9. The year of machine manufacture.
10. The value expressed in V of the nominal voltage used by the machine, see “TECHNICAL DATA” on page 15.
11. The commercial name of the machine, and the manufacturer's address.

Fill in the following table at the time of delivery and/ or installation, so it can be used as a future reference when necessary.

MACHINE ID NAME	
SERIAL NUMBER	
DATE OF DELIVERY AND/ OR INSTALLATION	

MAIN MACHINE COMPONENTS

STANDARD COMPONENTS

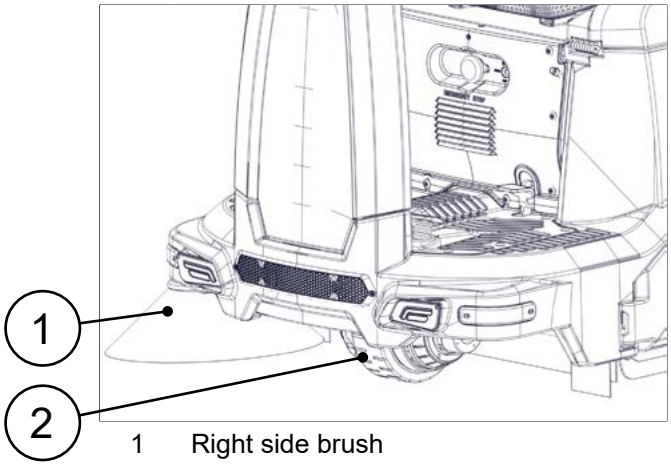

1 Right side brush

2 Traction wheel

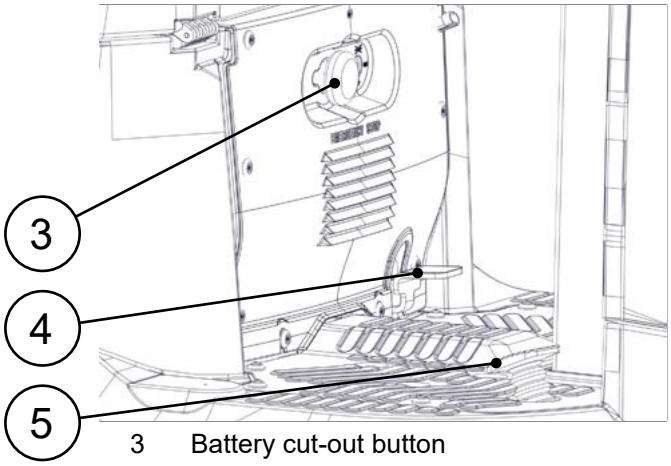

3 Battery cut-out button

4 Front flap lifting pedal

5 accelerator pedal

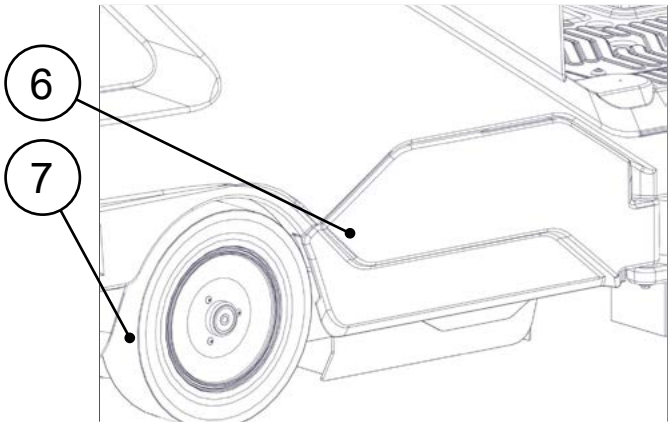

6 Right-hand maintenance carter

7 Rear wheel

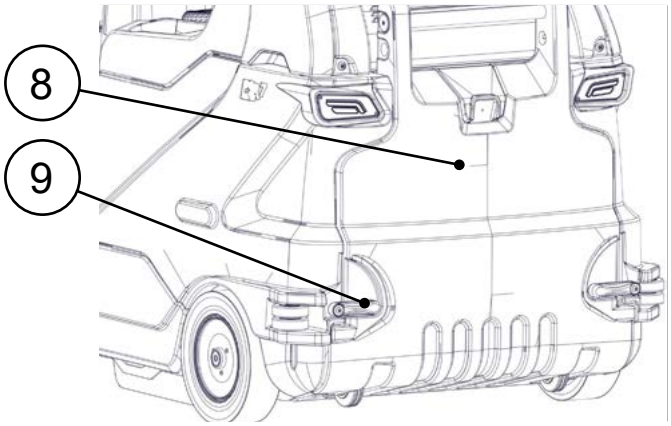

8 Debris hopper

9 Debris hopper retainer lever

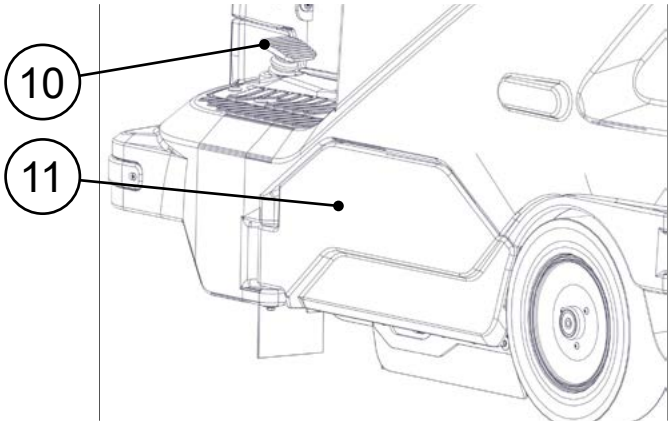

10 Service brake pedal

11 Left-hand maintenance carter

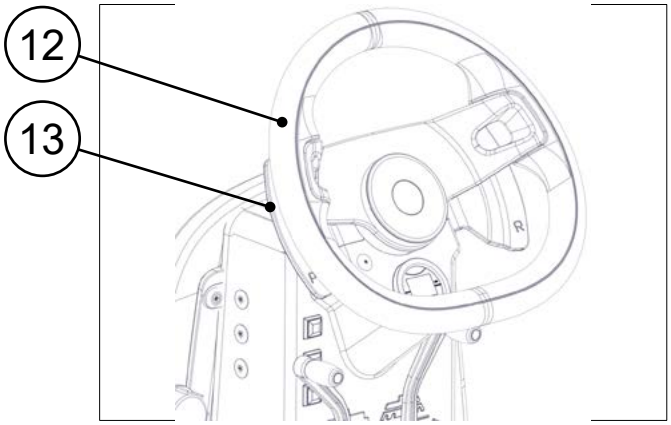

12 Steering wheel

13 Activation lever for extra-pressure function (central brush)

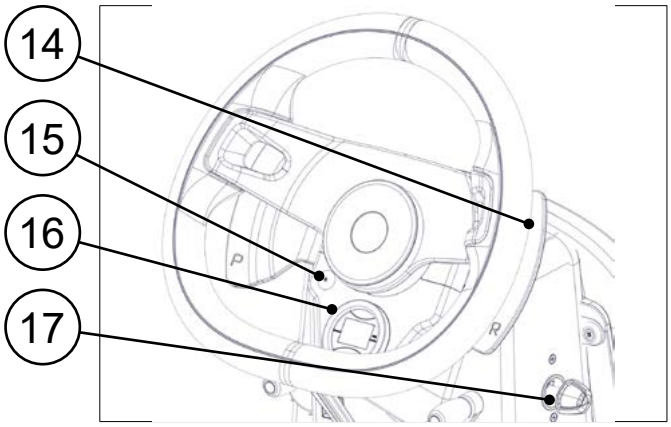

14 Reverse activation lever

15 Central brush extra pressure LED

16 Control display

17 Main machine switch

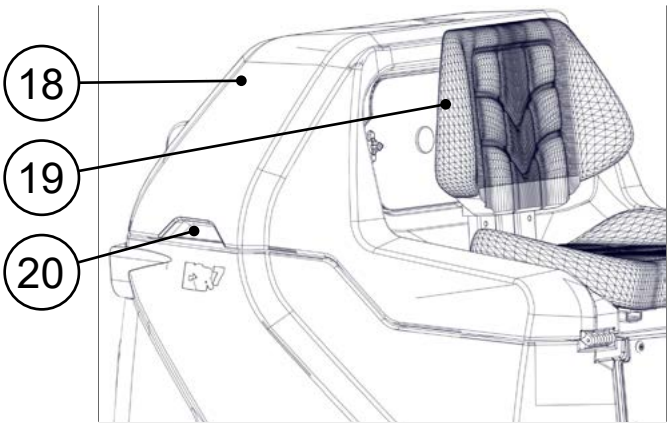

18 Upper body

19 Operator's seat

20 Upper body rotation handle

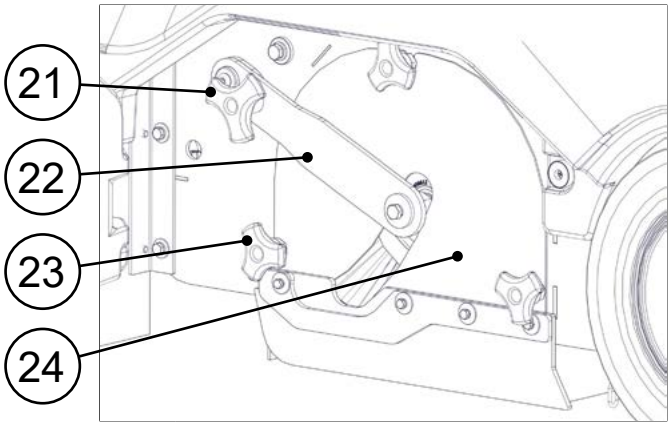

21 Locking knob for central brush lifting lever

22 Central brush lifting lever

23 Locking knob for central brush side inspection carters

24 Central brush side inspection carters

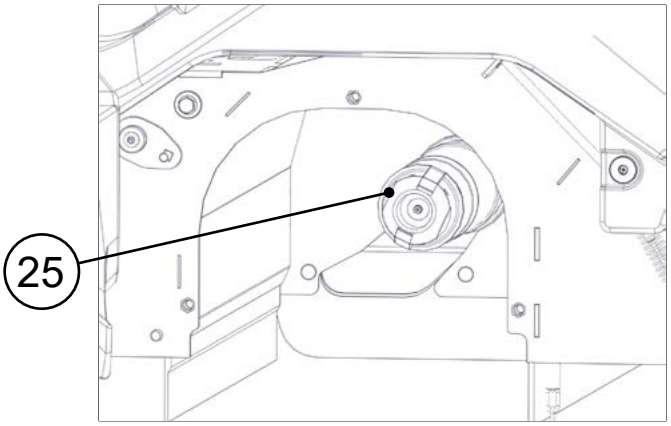

25 Central brush towing hook

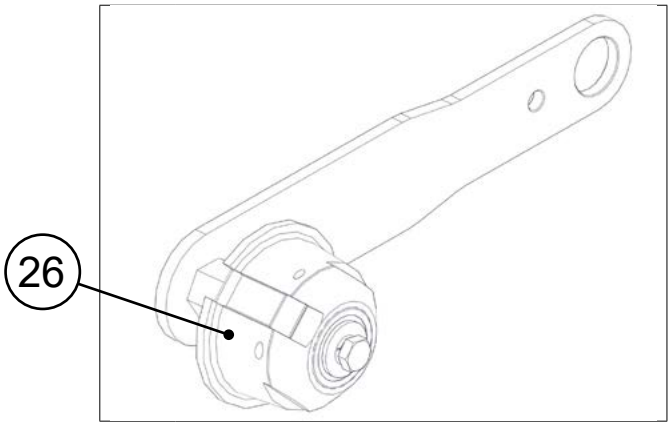

26 Central brush idle hook

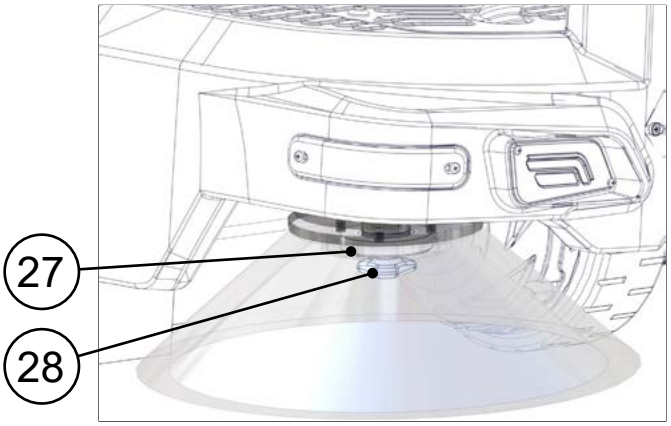

27 Side brush retainer plate

28 Side brush locking knob

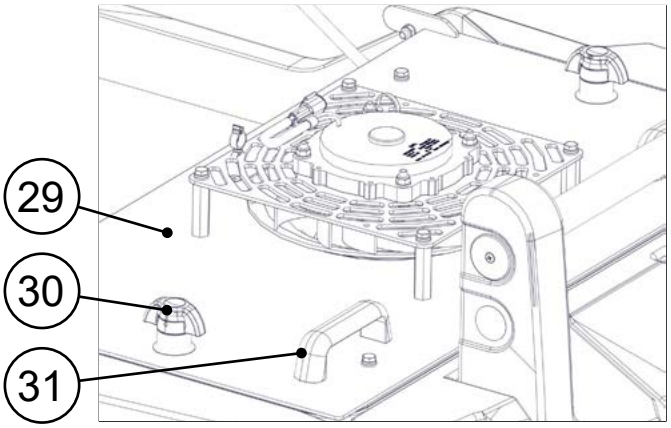

29 Vacuum compartment cover

30 Vacuum compartment cover locking knob

31 Vacuum compartment cover rotation handle

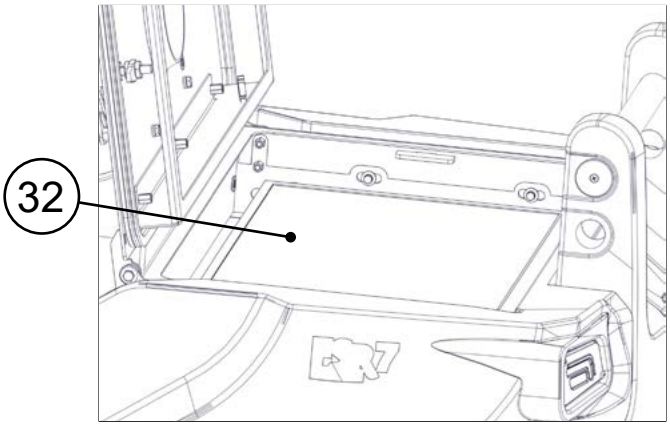

32 Panel filter

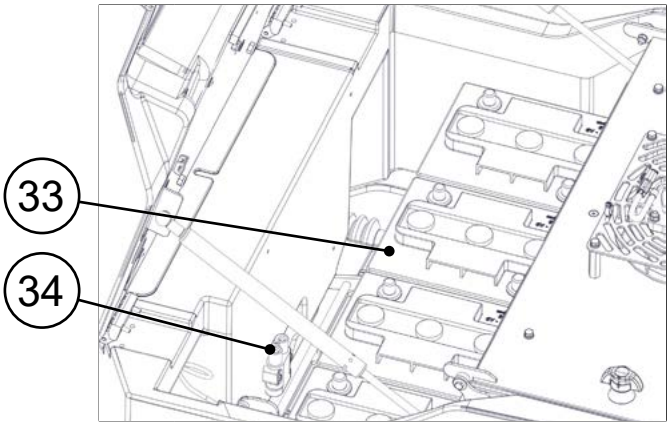

33 Battery compartment

34 Battery cable connector (version without on-board battery charger)

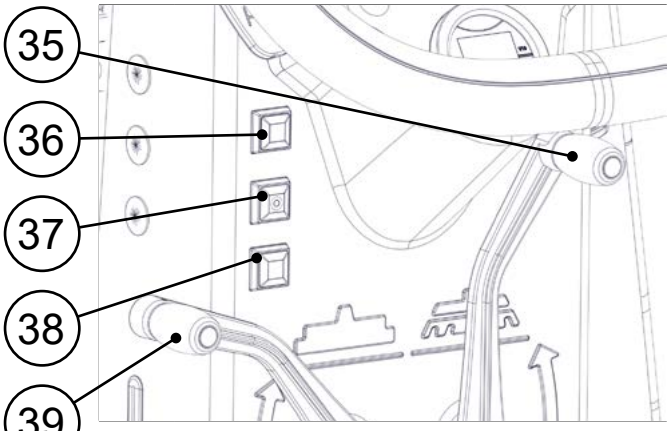

35 Central brush control lever

36 Horn control button

37 Vacuum motor control button

38 Filter shaker control button

39 Side brush control lever

OPTIONAL COMPONENTS

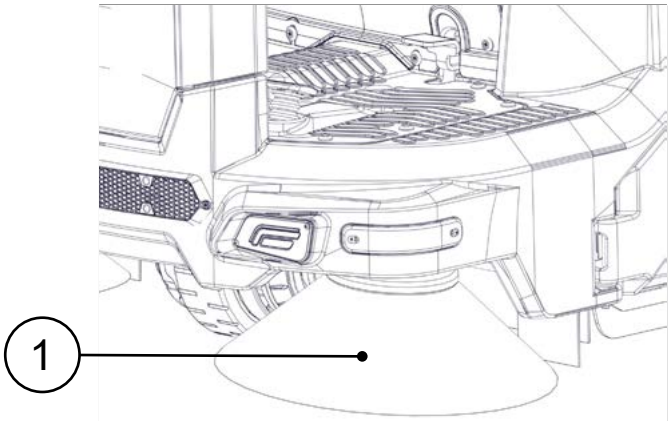

1 Left side brush

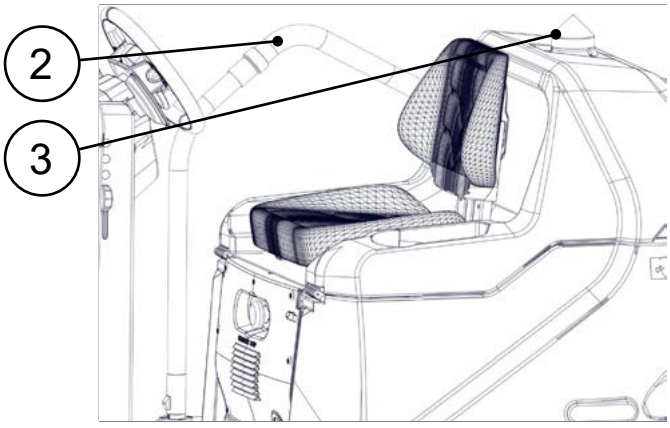

2 Integrated vacuum cleaner kit

3 Blinking light

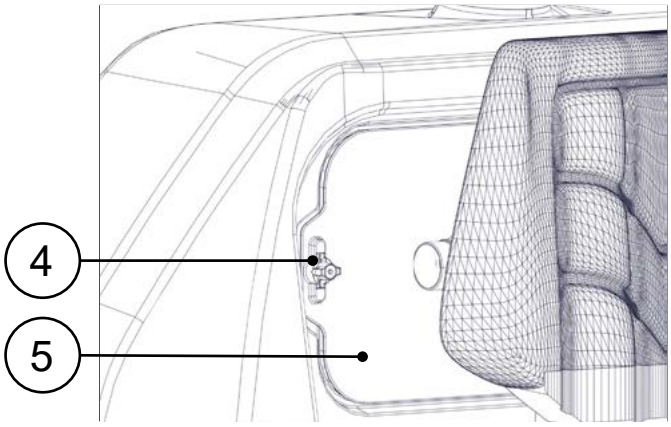

4 Locking knob for compartment cover of the filter bag in the integrated vacuum cleaner kit

5 Compartment cover of the filter bag in the integrated vacuum cleaner kit

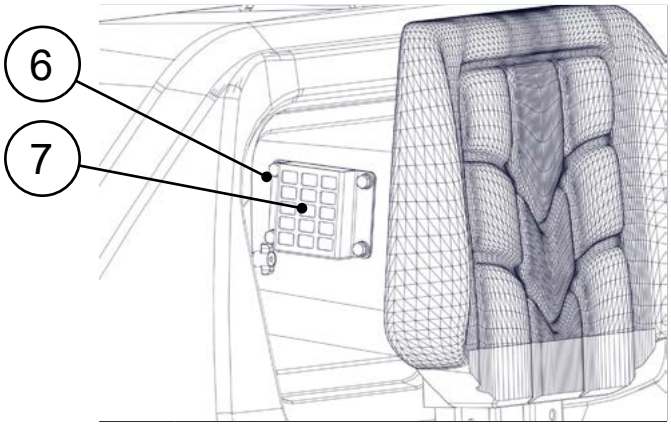

6 Support for the motor inlet air filter in the integrated vacuum cleaner kit

7 Motor inlet air filter in the integrated vacuum cleaner kit

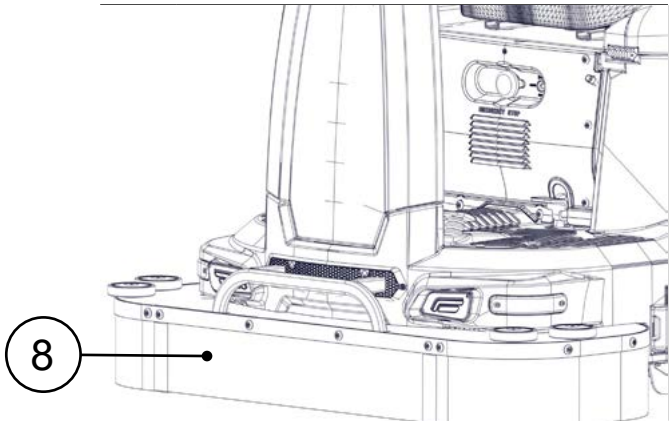

8 Front anti-dust skirt

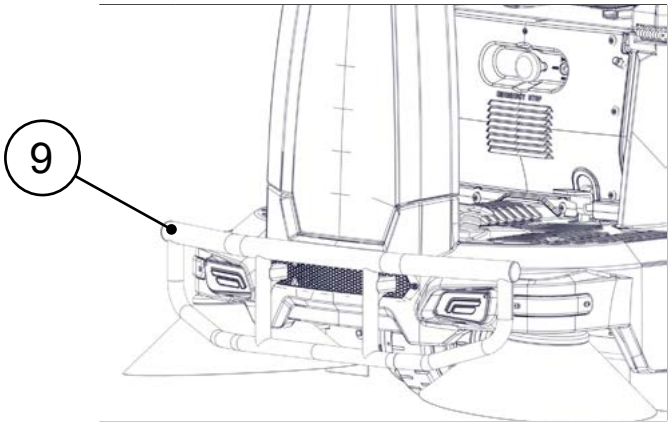

9 Front bumper kit

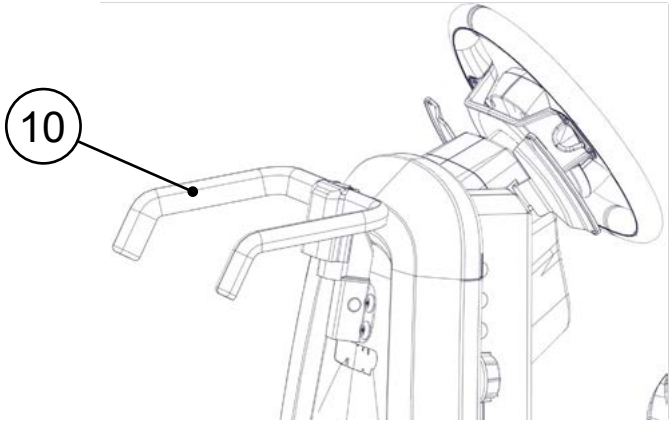

10 Support for bag of the cleaning accessory kit

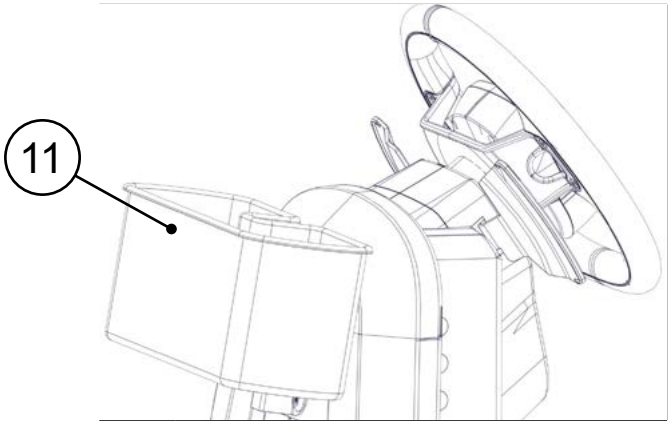

11 Support basin for bottles in the cleaning accessory kit

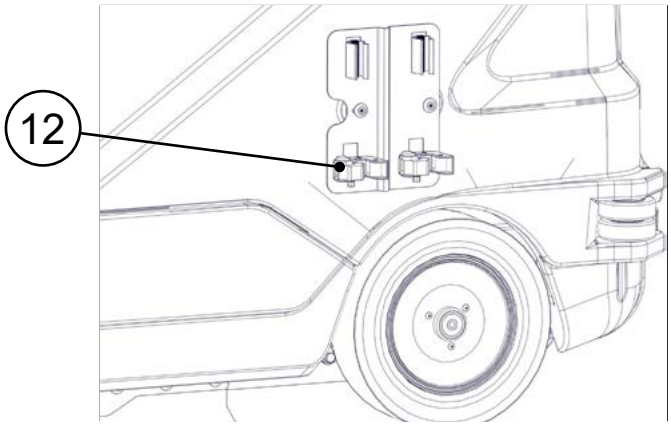

12 Support for brushes in the cleaning accessory kit

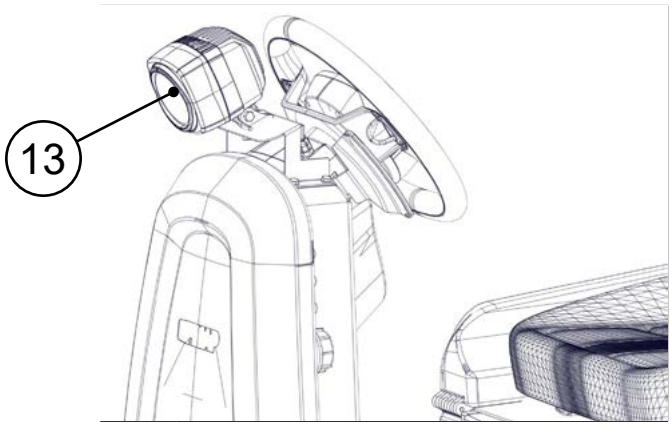

13 "Blue spot" safety light kit

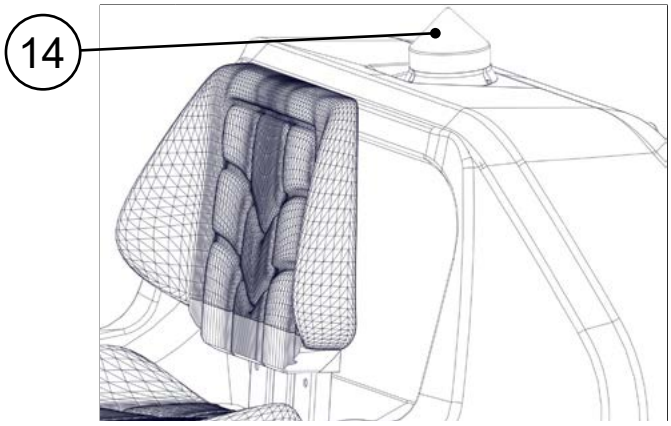

14 Blinking LED safety light kit

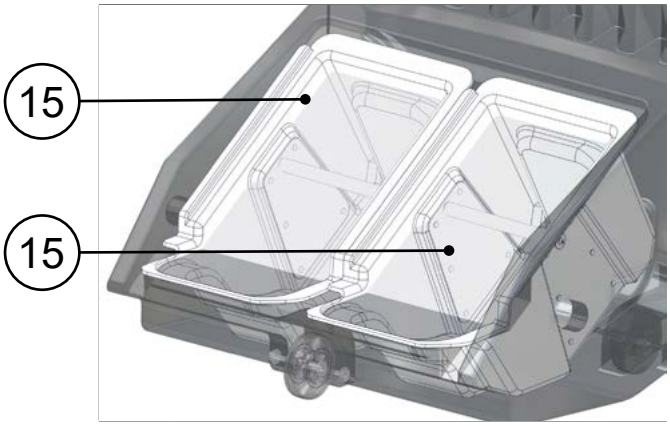

15 Kit of internal debris hopper containers

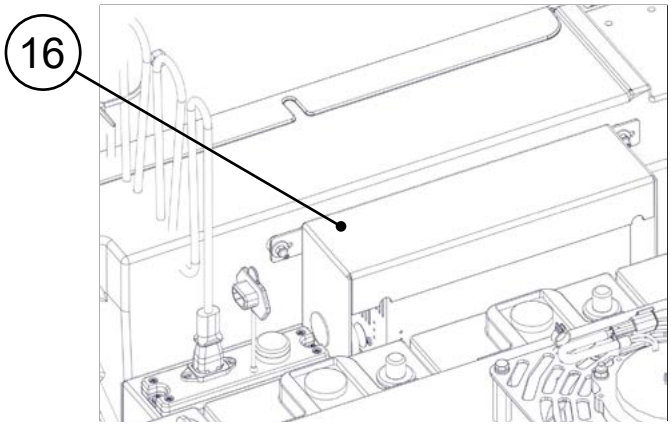

16 On-board battery charger kit

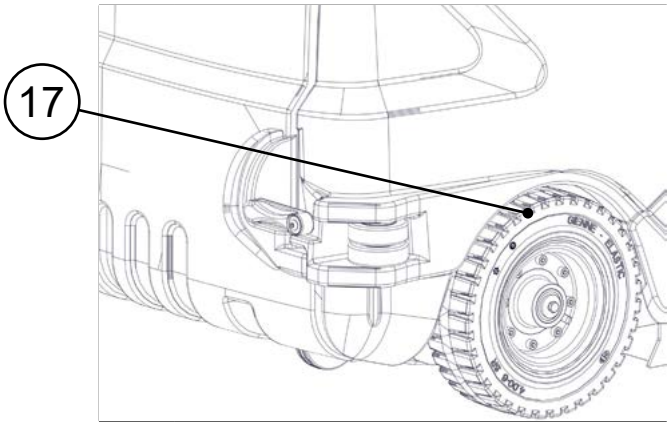

17 Super-elastic wheel kit

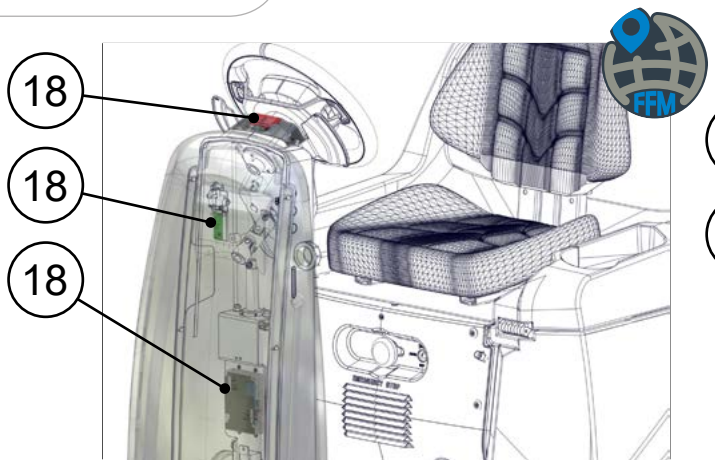

18 Automatic fleet management kit (FFM)

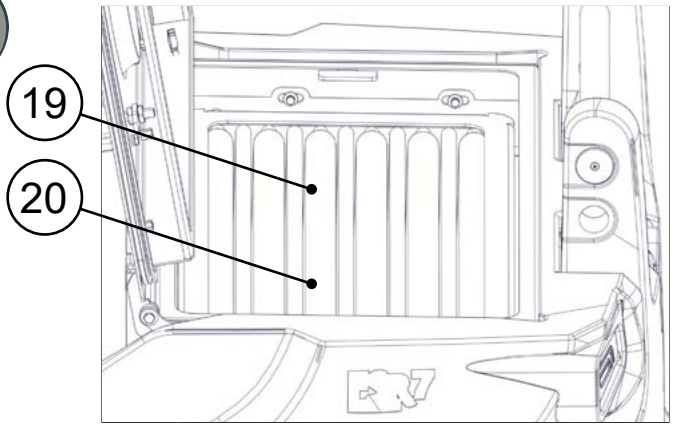

19 Pocket filter kit (FELT PE/PE 401 STANDARD)

20 Pocket filter kit (ANTISTATIC POLYESTER FELT WITH PTFE MEMBRANE)

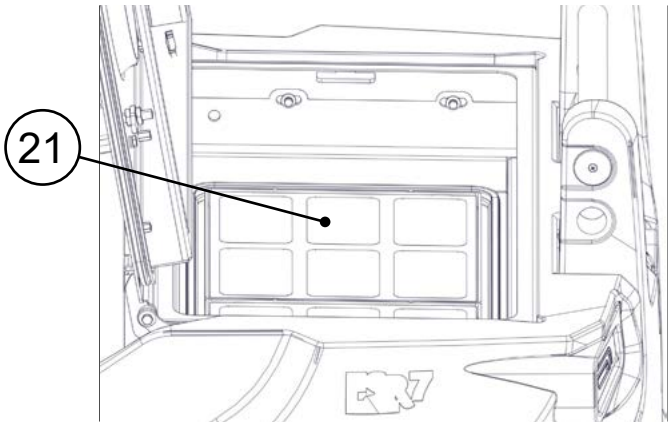

21 Fluff retainer grille kit

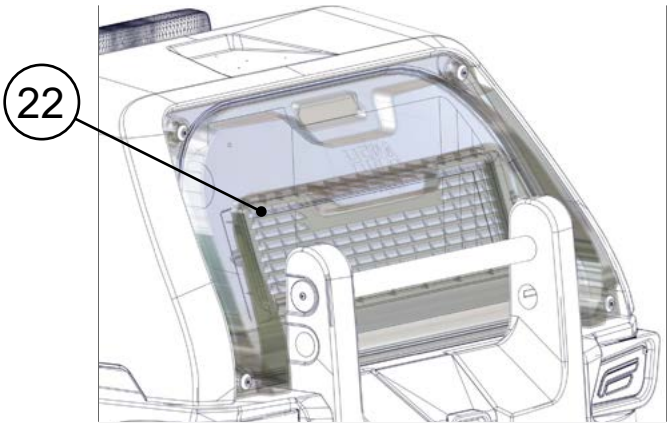

22 HEPA outlet air filter kit

TECHNICAL DATA

TECHNICAL DATA	UM [SI]	FSR7 BASIC
Rated voltage [IEC 60335-2-72; IEC 62885-9]	V	24
Nominal input power [IEC 60335-2-72; IEC 62885-9]	KW	1,9
Working gradeability with GVW [IEC 60335-2-72; IEC 62885-9]	%	12.5
Machine working weight (gross weight - GVW) [IEC 60335-2-72; IEC 62885-9]	kg	685
Weight during transport [IEC 60335-2-72; IEC 62885-9]	kg	420
Machine dimensions during working phase (length; height width)	mm	1610 1290 1020
Operator station sound pressure level (Lp_A) [IEC 60335-2-72; IEC 62885-9; ISO 11201]	dB (A)	69
Sound power level (Lw_A) [IEC 60335-2-72; IEC 62885-9; ISO 3744]	dB (A)	85,8
Uncertainty Kp_A	dB (A)	±1.5
Hand-arm vibrations [IEC 60335-2-72; IEC 62885-9; ISO 5349-1]	m/s^2	1,34
Whole-body vibrations [IEC 60335-2-72; IEC 62885-9; ISO 2631-1]	m/s^2	0.3
Vibration measurement uncertainty		±4%

TECHNICAL DATA	UM [SIB]	FSR7 BASIC
Rated voltage [IEC 60335-2-72; IEC 62885-9]	V	24
Nominal input power [IEC 60335-2-72; IEC 62885-9]	KW	1,9
Working gradeability with GVW [IEC 60335-2-72; IEC 62885-9]	%	12.5
Machine working weight (gross weight - GVW) [IEC 60335-2-72; IEC 62885-9]	lb	1510,17
Weight during transport [IEC 60335-2-72; IEC 62885-9]	lb	925,94
Machine dimensions during working phase (length; height width)	in	63,38 50,78 40,15
Operator station sound pressure level (Lp_A) [IEC 60335-2-72; IEC 62885-9; ISO 11201]	dB (A)	69
Sound power level (Lw_A) [IEC 60335-2-72; IEC 62885-9; ISO 3744]	dB (A)	85,8
Uncertainty Kp_A	dB (A)	±1.5
Hand-arm vibrations [IEC 60335-2-72; IEC 62885-9; ISO 5349-1]	m/s^2	1,34
Whole-body vibrations [IEC 60335-2-72; IEC 62885-9; ISO 2631-1]	m/s^2	0.3
Vibration measurement uncertainty		±4%

N.B.: for all other technical data, contact the FIMAP service centre of reference or the one closest to you, or visit the website www.fimap.com.

SYMBOLS USED ON THE MACHINE

Reverse gear activation/deactivation lever position symbol: applied to the reverse activation/deactivation lever. See “REVERSE GEAR” on page 48.	R

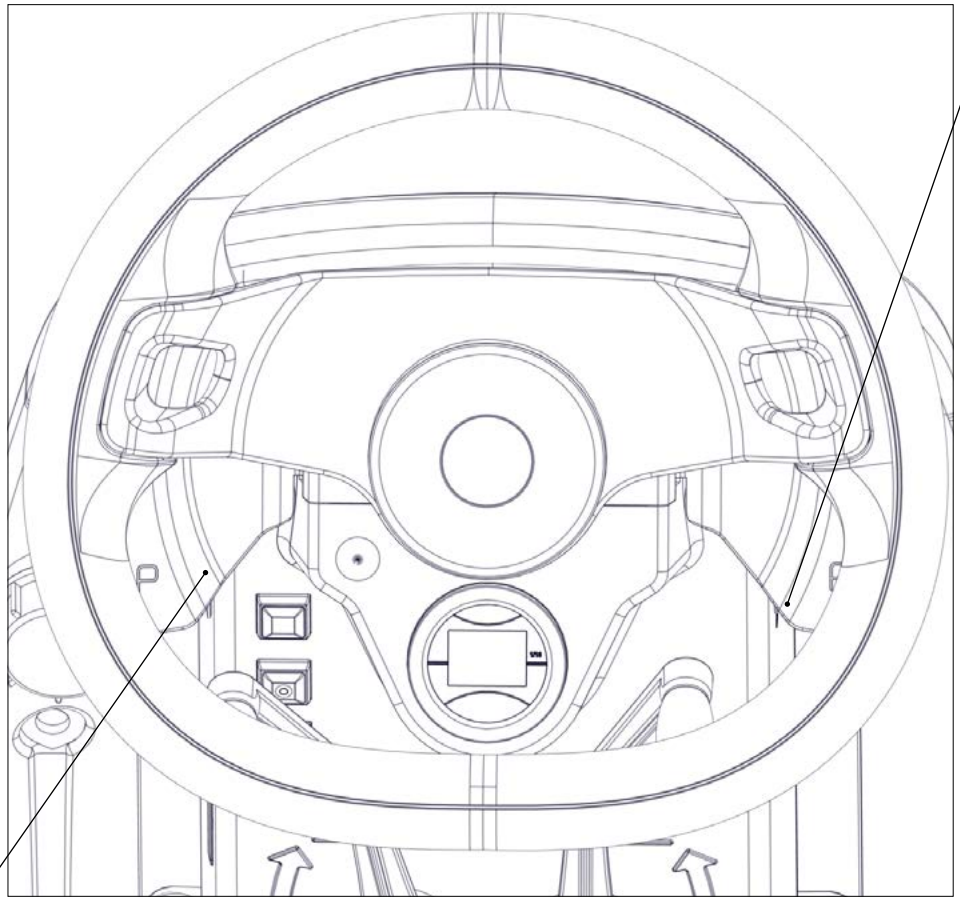

P	**Extra pressure activation/deactivation lever position symbol:** applied to the brush head extra-pressure activation/deactivation lever. See “EXTRA PRESSURE FUNCTION (CENTRAL BRUSH)” on page 46.

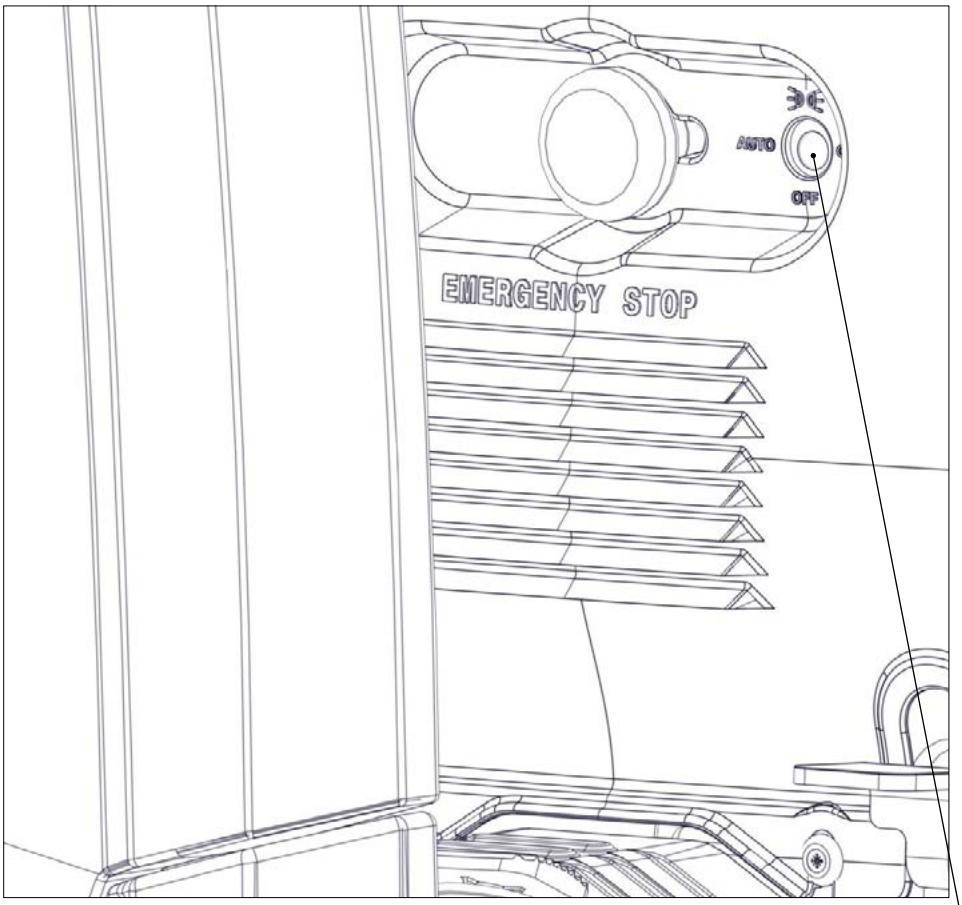

AUTO	**“AUTO” symbol on blinking light selector lever:** applied to the carter of the electric system panel, to show where to position the blinking light control lever so the LEDs switch on automatically when the microswitches that command them are deactivated. See “SERVICE LIGHTS” on page 49.
OFF	**“OFF” symbol on blinking light selector lever:** applied to the carter of the electric system panel, to show where to position the blinking light control lever so the LEDs are always switched off. See “SERVICE LIGHTS” on page 49.
ON	**“ON” symbol on blinking light selector lever:** applied to the carter of the electric system panel, to show where to position the blinking light control lever so the LEDs are always switched on. See “SERVICE LIGHTS” on page 49.

LABELS USED ON THE MACHINE

FSR7	**Label with raised FSR7 logo**
FIMAP	**Side label with FIMAP logo**

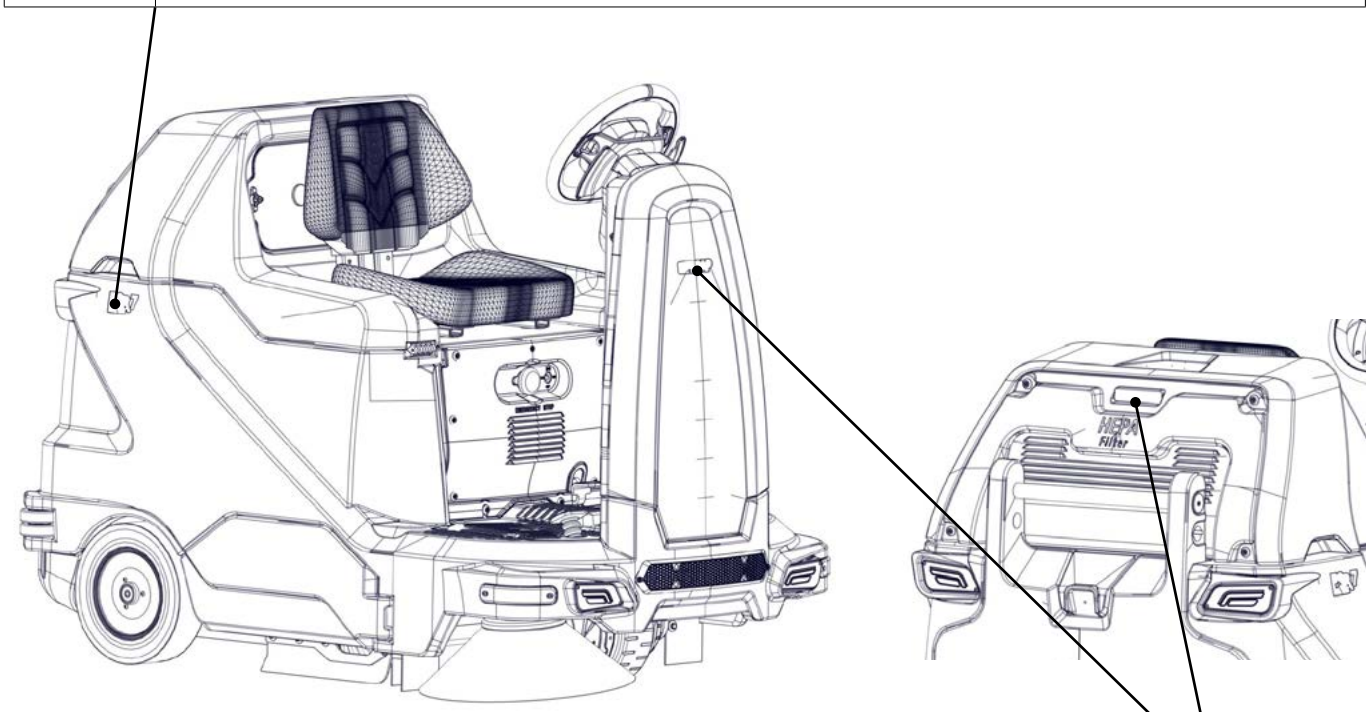

Label with FIMAP logo	FIMAP
Label with FFM logo: used to specify that the machine is equipped with the automatic fleet management system.	FFM

Covering labels for LED headlights: used on the machine versions with no LEDs in the working lights kit.

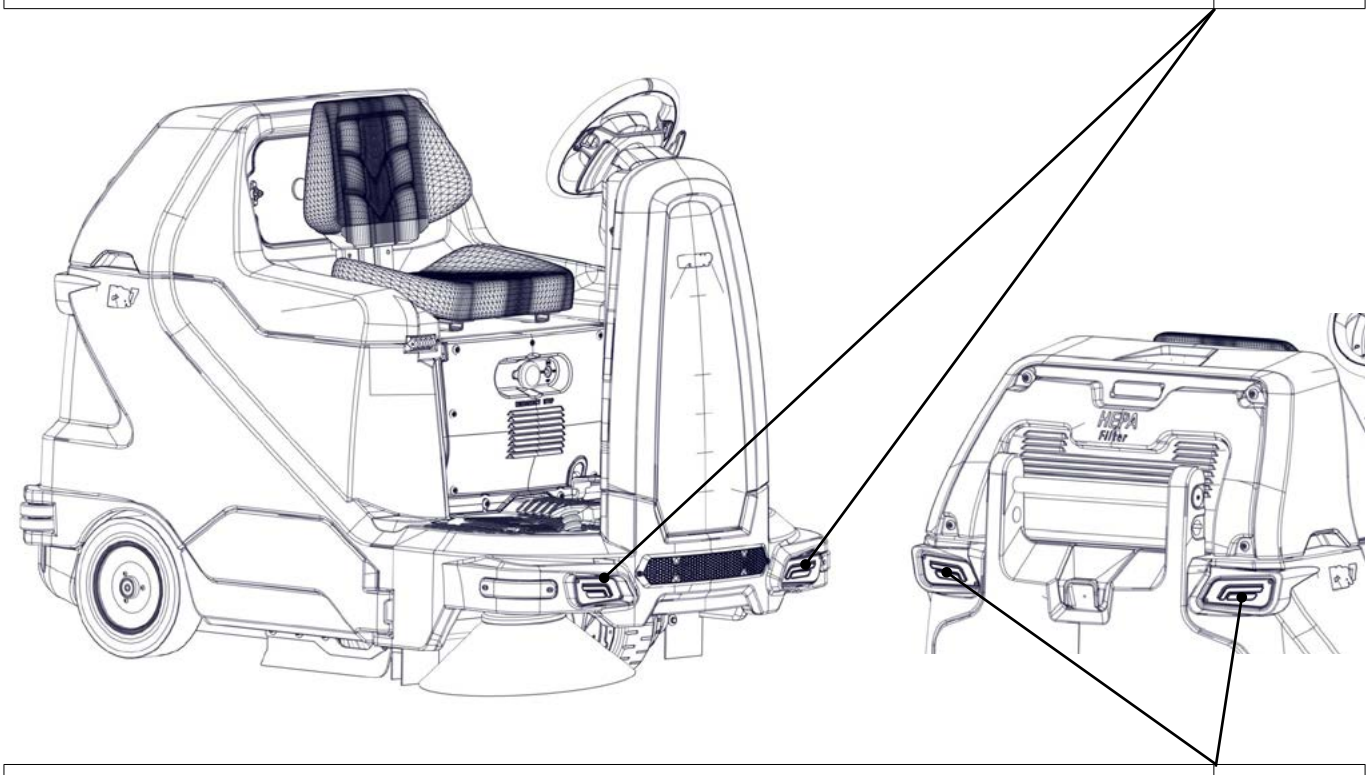

Covering labels for LED tail-lights: used on the machine versions with no LEDs in the working lights kit.

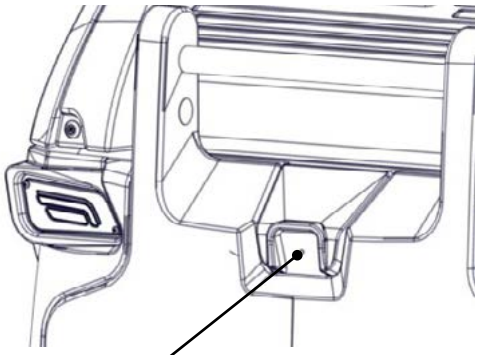

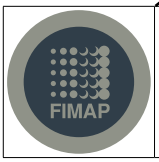

Labels with FIMAP logo: used on the machine versions with no rear view camera.

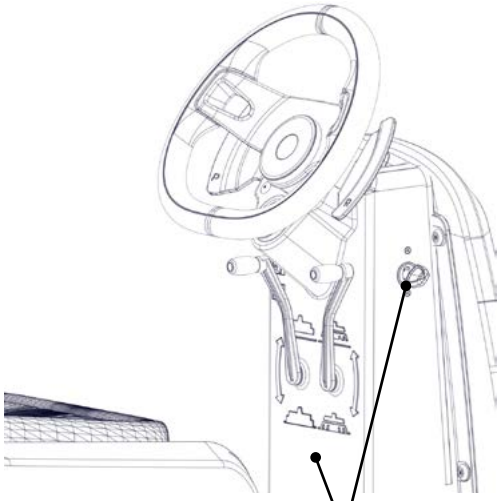

Main machine switch label: applied on the right side of the steering column, to indicate the location of the machine's main switch.	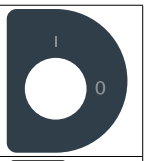
Prohibition to vacuum hazardous elements label: applied to the back of the steering column to indicate that it is strictly prohibited to vacuum up incandescent particles or flammable and/or explosive powders and/or liquids with the machine, and to operate the machine in their vicinity.	
Serial number plate: applied to the back of the steering column. Shows the general machine characteristics, including the serial number. See “SERIAL NUMBER PLATE” on page 8.	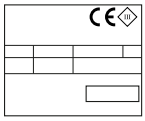

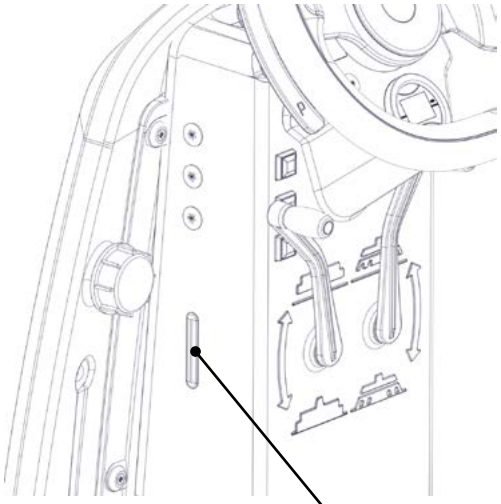

Label indicating the need to read the Use and Maintenance Manual: applied on the left side of the steering column, to indicate the need for the user to read the user and maintenance manual before operating the machine.	

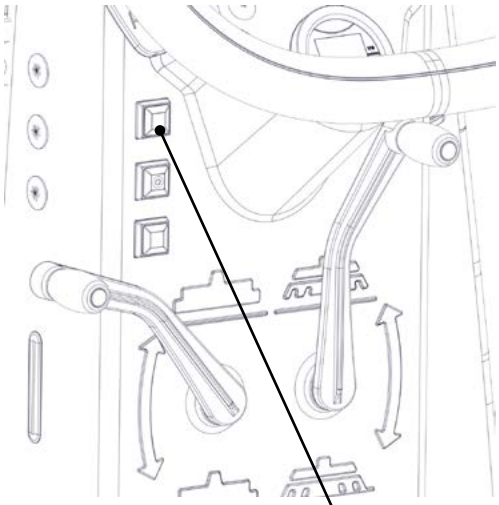

Horn button label: applied to the left side of the steering column to identify the machine's horn button.	
Vacuum motor control button sticker: applied to the left side of the steering column to identify the suction motor control button on the machine.	
Filter shaker control button sticker: applied to the left side of the steering column to identify the filter shaker control button on the machine.	

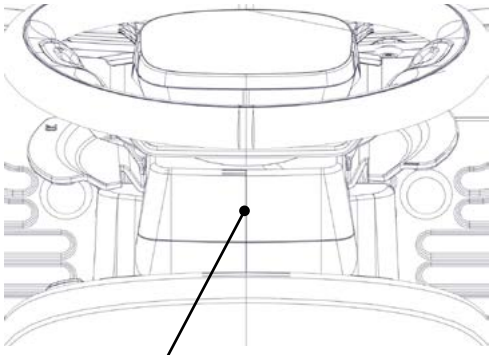

	Label indicating the need to read the Use and Maintenance Manual: Applied to the front of the steering column to indicate the need for the user to read the user and maintenance manual before operating the machine.

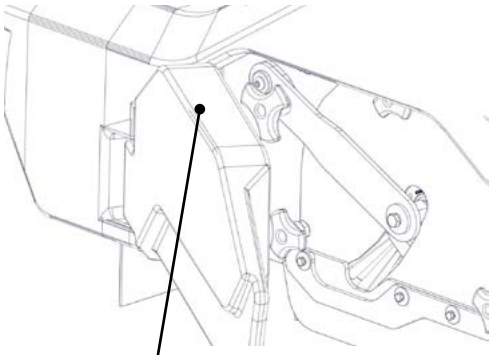

	Treading ban label: applied above the side inspection doors, to identify the surfaces that must not be trodden on (risk of personal injury or damage to the machine).

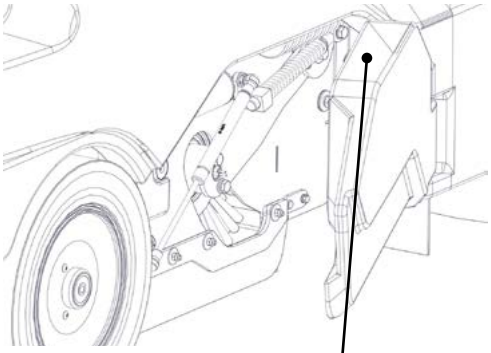

Treading ban label: applied above the side inspection doors, to identify the surfaces that must not be trodden on (risk of personal injury or damage to the machine).	

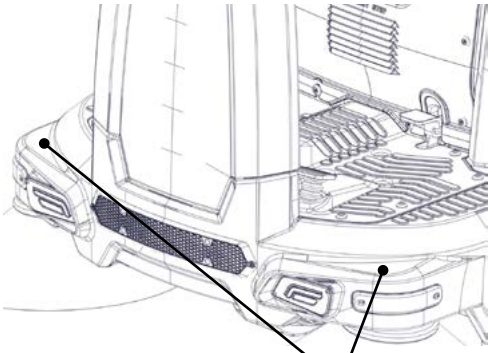

Treading ban label: applied to the front part of the machine body, to identify the surfaces that must not be trodden on (risk of personal injury or damage to the machine).	

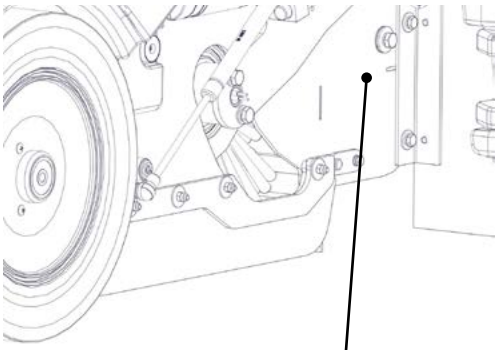

Label indicating that touching the brush when moving is prohibited: applied on the right side of the frame, to indicate that it is forbidden to bring your hands near the central brush control linkage while the brush is moving.	

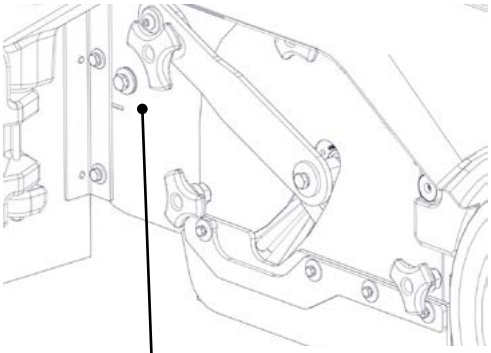

	Label indicating that touching the brush when moving is prohibited: applied on the left side of the frame, to indicate that it is forbidden to bring your hands near the central brush control linkage while the brush is moving.

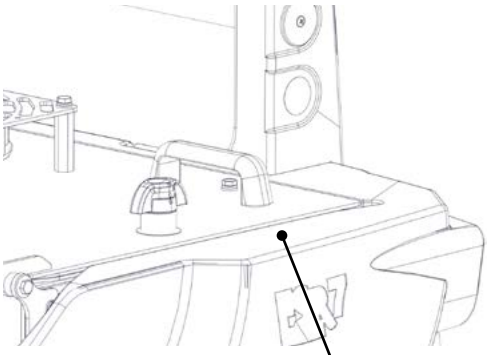

Label warning about the risk of crushed hands: applied on the left side of the machine body (in the area where the vacuum head is housed), to indicate the areas where there is a risk of getting your hands crushed.	

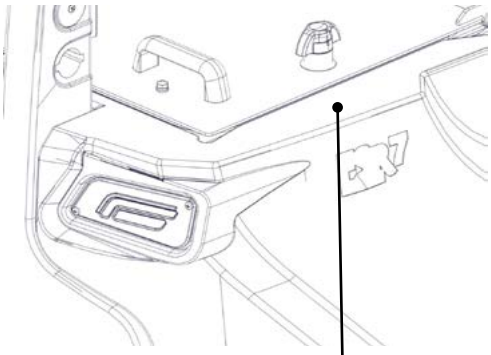

Label warning about the risk of crushed hands: applied on the right side of the machine body (in the area where the vacuum head is housed), to indicate the areas where there is a risk of getting your hands crushed.	

	Battery box warning label: applied to the vacuum area cover plate, to indicate that the cells might emit highly flammable hydrogen gas during the recharging phase. See “RECHARGING THE BATTERIES” on page 32.

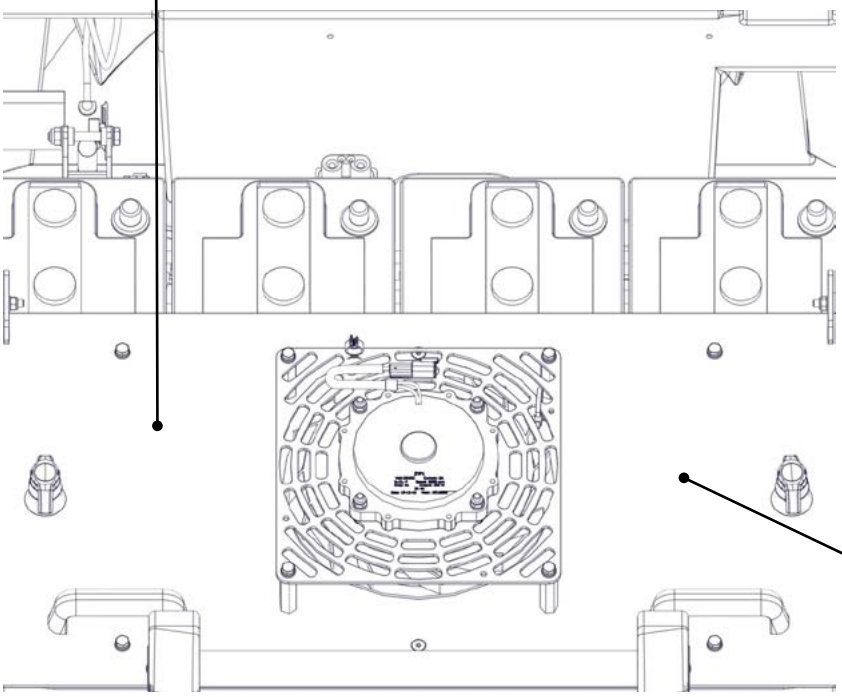

Battery box charging instructions label: applied to the vacuum area cover plate, to indicate the procedures to be followed to recharge the battery box correctly. See “RECHARGING THE BATTERIES” on page 32.	
Suction motor filter maintenance label: applied to the inner part of the recovery tank cover, to indicate that maintenance must be carried out on the suction motor filter after every use of the machine. See “CLEANING THE PANEL FILTER” on page 61 or “CLEANING THE POCKET FILTER (OPTIONAL)” on page 62.	

CONTROL STATION

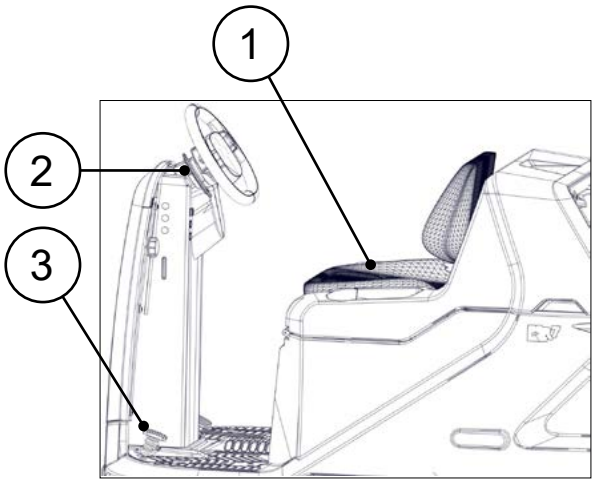

The machine has an easy and user-friendly control station, comprised of mainly the following:

1. Driver's seat. To adjust the seat, refer to "ADJUSTMENT OF DRIVING POSITION" on page 34.
2. Dashboard. See "DASHBOARD" on page 25.
3. Pedalboard. See "PEDALBOARD" on page 26.

DASHBOARD

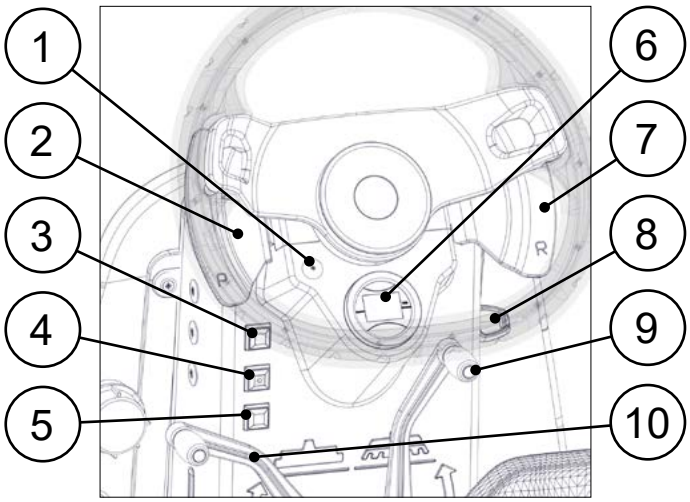

The dashboard, in the steering column area, is divided up as follows:

1. POWER working program activation light. See "EXTRA PRESSURE FUNCTION (CENTRAL BRUSH)" on page 46
2. POWER working program activation/deactivation lever. See "EXTRA PRESSURE FUNCTION (CENTRAL BRUSH)" on page 46
3. Horn activation button, see "BUZZER" on page 46
4. Suction motor activation/deactivation button. See "VACUUM SYSTEM ACTIVATION/DEACTIVATION" on page 46
5. Filter shaker activation/deactivation button. See "FILTER SHAKER ACTIVATION/DEACTIVATION" on page 46
6. Control display, see "CONTROL DISPLAY" on page 26
7. Reverse activation/deactivation lever. See "REVERSE GEAR" on page 48
8. Key-operated main switch of the machine
9. Central brush control lever
10. Side brush control lever

CONTROL DISPLAY

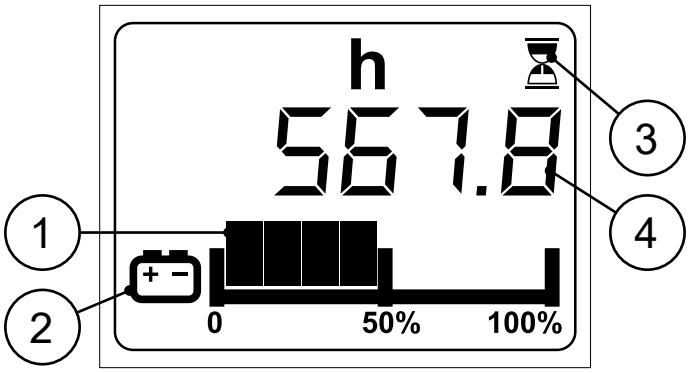

In battery-powered versions, the basic control display is composed of the following:

1. Battery charge graphic icon, see "BATTERY CHARGE LEVEL INDICATOR" on page 44.
2. Battery charge level graphic symbol, see "BATTERY CHARGE LEVEL INDICATOR" on page 44.
3. Hour meter graphic icon, see "HOUR METER" on page 44.
4. Hour meter graphic symbol, see "HOUR METER" on page 44.

PEDALBOARD

The pedalboard, in the footrest area, is divided up as follows:

1. Accelerator pedal (1) (**Fig.1**), on the right of the pedalboard, and activated with the right foot.

N.B.: the forward speed can be adjusted by vigorously pressing the pedal, either more or less (1) (**Fig.1**).

2. Front flap pedal (2) (**Fig.1**), located on the left of the pedalboard. Use the heel of your left foot to activate the pedal (2).

N.B.: the pedal (2) is used to raise the front flap when close to bulky waste (e.g. tin cans). When the front flap is raised, the waste is collected directly by the central brush and thrown into the debris hopper.

3. Brake pedal (3) (**Fig.2**), on the left of the pedalboard, and activated with the left foot.

N.B.: if the accelerator pedal (1) is released while moving, the machine electronics start to slow down with a gentle deceleration ramp. See "BRAKING CONTROL" on page 48.

N.B.: the machine is fitted with a mechanical pedal brake (3) in addition to the machine electronics that handle the braking process. The mechanical braking action depends on the degree of force applied to the pedal (3).

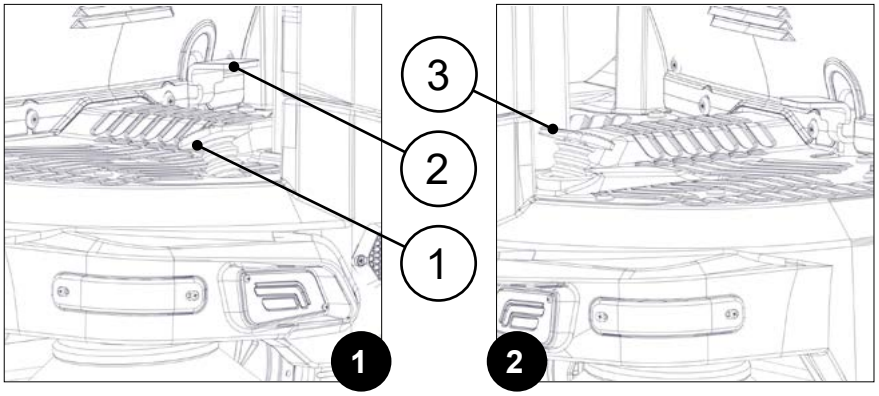

PREPARATION OF MACHINE

HANDLING THE PACKAGED MACHINE

The overall dimensions of the entire package are:

DIMENSIONS		
Length	203cm	79.92in
Width	128cm	50.39in
Height	161cm	63.38in
Weight	380Kg	837.76lb

N.B.: it is recommended that all the packaging components be kept for any future machine transportation.

DANGER: Move the packaged product with handling trolleys that comply with legal requirements regarding size and mass of the packaging.

HOW TO UNPACK THE MACHINE

The machine is shipped in specific packaging. To remove it, proceed as follows:

1. Place the lower part of the outer packaging in contact with the floor.

N.B.: use the pictograms printed on the box as a reference.

2. Remove the outer package.

WARNING: the machine is contained in specific packaging materials, whose elements (plastic bags, staples, etc.) can pose potential hazards, and must not be left within reach of children, disabled persons, etc.

3. Remove the boxes containing the disc brushes and squeegee body from the machine.

CAUTION: it is recommended to wear the appropriate PPE (Personal Protective Equipment), suitable for the work to be carried out.

4. Place two descent ramps at the rear of the machine.

WARNING: the descent ramps are consigned in the machine packaging. If there are no ramps provided, bear in mind the one used must have a suitable slope to avoid damaging the machine and a sufficient load-bearing capacity to ensure it does not break when the machine moves across it. To obtain the net weight of the machine and the safety percentage value required of the ramp, contact your FIMAP service centre of reference or the one closest to you. Alternatively, you can send an email to service@fimap.com, or visit the website www.fimap.com.

5. The machine is secured to the footboard with wedges that lock the wheels; remove these wedges.
6. Check the main switch is on “0". If it isn't, make a quarter turn anti-clockwise with the key (1) (**Fig.1**).
7. Remove the key from the instrument panel.
8. Stand at the side of the machine, grasp the handle (2) and turn the upper body (3) to the maintenance position (**Fig.2**).

ATTENTION: the following operations must be carried out by qualified personnel. An incorrect connection of the connector may cause a malfunction of the device.

9. Connect the connector of the battery pad trolley to the machine's main system connector.

10. Grip the handle (2) and turn the upper body (3) to its working position.
11. Sit on the driver's seat.
12. Insert the key (1) in the main switch on the instrument panel (**Fig.3**).

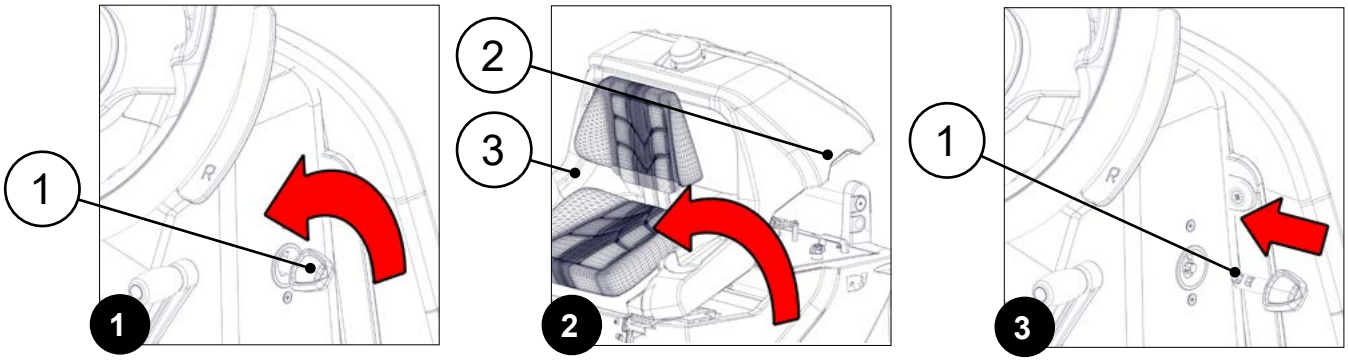

13. Bring the main switch to position "I" by making a quarter turn clockwise with the key (1) (**Fig.4**).

N.B.: at switch-on, the control display visualises a series of pages, the last of which shows the machine programming characteristics. See "STARTING WORK" on page 41.

14. Make sure the central brush is in its idle position. If it isn't, rotate the lever (4) anticlockwise (**Fig.5**).
15. Make sure the side brush is in its idle position. If it isn't, rotate the lever (5) anticlockwise (**Fig.6**).

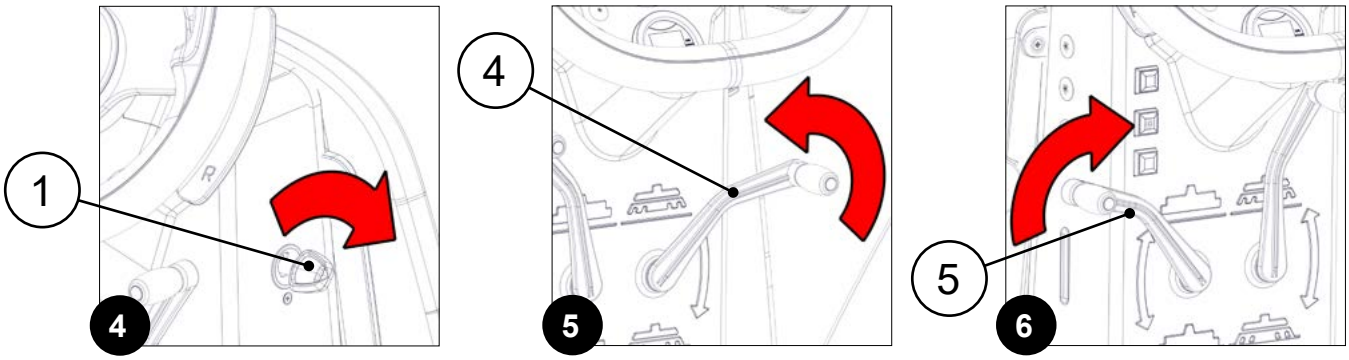

14. Engage the "REVERSE GEAR ACTIVATION/DEACTIVATION" lever (6) underneath the steering wheel (**Fig.7**).
15. Press the drive pedal (7) (**Fig.8**) to start the machine moving in reverse.
16. Drive the machine down the ramp.

ATTENTION: during this operation, check there are no people or objects near the machine.

17. Set the main switch to its "0" position, and turn the key (1) a quarter turn anti-clockwise (**Fig. 1**).
18. Remove the key from the instrument panel.
19. Grip the handle (2) and turn the upper body (3) to its maintenance position.

ATTENTION: the following operations must be carried out by qualified personnel. An incorrect connection of the connector may cause a malfunction of the device.

20. Disconnect the backup battery trolley connector from the main machine system connector.
21. Grip the handle (2) and turn the upper body (3) to its working position.

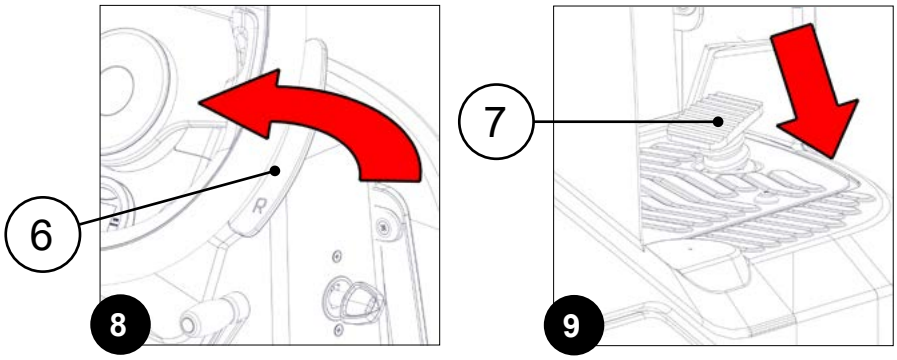

MACHINE SAFETY

To ensure that work is carried out in the best safety conditions, proceed as follows:

CAUTION: it is recommended to wear the appropriate PPE (Personal Protective Equipment), suitable for the work to be carried out.

1. Make sure the debris hopper is empty (if necessary, empty it). See "EMPTYING THE DEBRIS HOPPER" on page 44.
2. Sit on the driver's seat.
3. Insert the key (1) into the main switch of the machine, located on the right side of the steering column. Bring the main switch to its "I" position by turning the key (1) a quarter turn clockwise (**Fig.1**).

N.B.: at switch-on, the control display visualises a series of pages, the last of which shows the machine programming characteristics. See "STARTING WORK" on page 41.

4. Make sure the central brush is in its idle position. If it isn't, rotate the lever (2) anticlockwise (**Fig.2**).
5. Make sure the side brush is in its idle position. If it isn't, rotate the lever (3) anticlockwise (**Fig.3**).

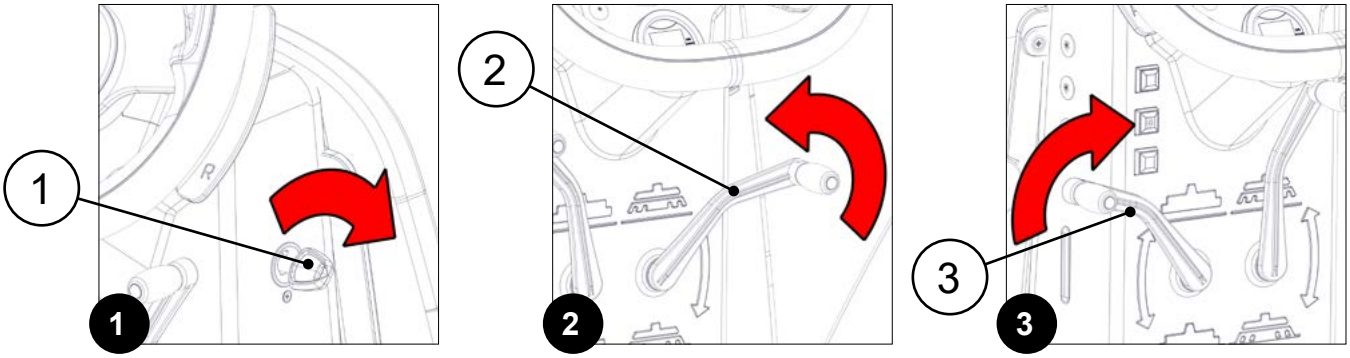

6. Bring the main switch to the "0" position by making a quarter turn anti-clockwise with the key (1) (**Fig.4**).
7. Remove the key from the instrument panel.
8. Get off the machine.
9. Grip the handle (4) and turn the upper body (5) to its maintenance position (**Fig.5**).

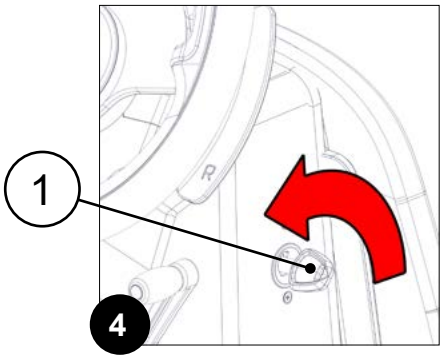

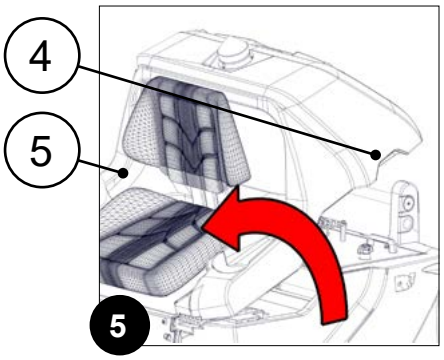

ATTENTION: the following operations must be carried out by qualified personnel. Incorrect operations could result in machine malfunctions.

10. Disconnect the connector on the machine's electrical system wiring from the connector on the power cable from the battery box.
11. Grip the handle (2) and turn the upper body (3) to its working position.

HOW TO MOVE THE MACHINE

The procedure for transporting the machine full safely is as follows:

CAUTION: it is recommended to wear the appropriate PPE (Personal Protective Equipment), suitable for the work to be carried out.

1. Make sure the debris hopper is empty (if necessary, empty it). See "EMPTYING THE DEBRIS HOPPER" on page 44.
2. Sit on the driver's seat.
3. Insert the key (1) into the main switch of the machine, located on the right side of the steering column. Bring the main switch to its "I" position by turning the key (1) a quarter turn clockwise (**Fig.1**).

N.B.: at switch-on, the control display visualises a series of pages, the last of which shows the machine programming characteristics. See "STARTING WORK" on page 41.

4. Make sure the central brush is in its idle position. If it isn't, rotate the lever (2) anticlockwise (**Fig.2**).
5. Make sure the side brush is in its idle position. If it isn't, rotate the lever (3) anticlockwise (**Fig.3**).

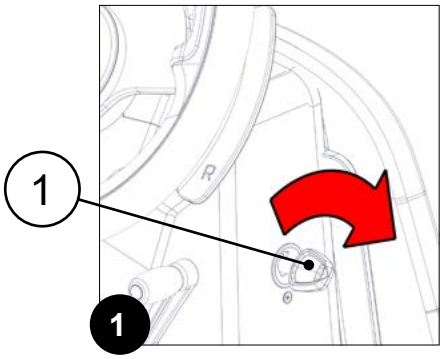

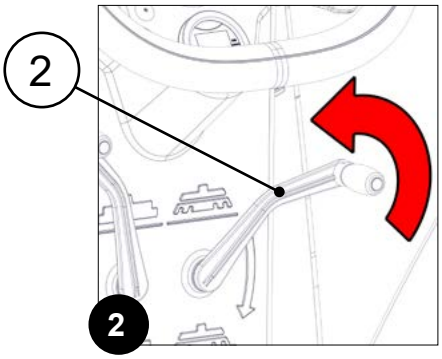

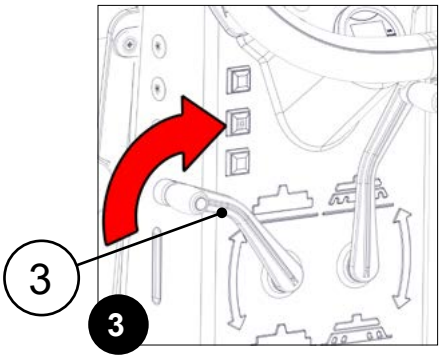

6. Press the drive pedal (4) (**Fig.4**) to begin moving the machine.
7. Use a ramp to move the machine up onto the transport vehicle.

WARNING: bear in mind the ramp must have a suitable slope to avoid damaging the machine, and a sufficient load-bearing capacity to ensure it does not break when the machine moves across it.

CAUTION: during this operation, check there are no people or objects near the machine.

8. Place the machine on the transport vehicle.
9. Bring the main machine switch to "0" by making a quarter turn anti-clockwise with the key (1).
10. Remove the key from the main switch.
11. Get off the machine.
12. Grip the handle (5) and turn the upper body (6) to its maintenance position (**Fig.5**).

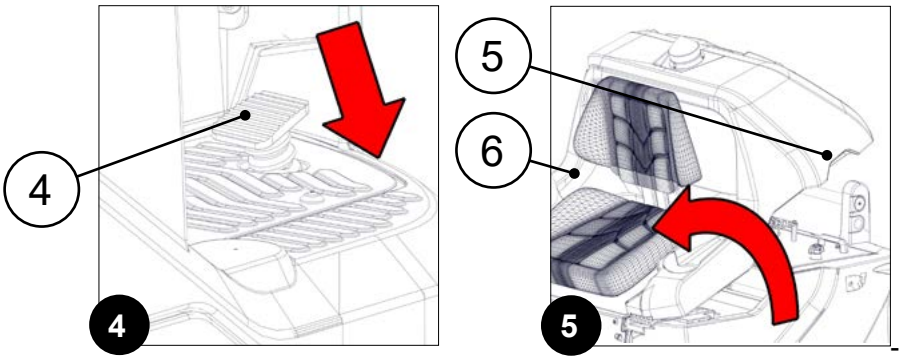

WARNING: the following operations must be carried out by qualified personnel. Incorrect operations could result in machine malfunctions.

13. Disconnect the connector on the machine's electrical system wiring from the connector on the power cable from the battery box.
14. Grip the handle (5) and turn the upper body (6) to its working position.
15. Secure the machine to the means of transport using an appropriate number and type of fastening elements, based on its weight and size.

CAUTION: secure the machine according to the directives in force in the country of use, so that it cannot slide or tip over.

TYPE OF BATTERY TO BE USED

To obtain good work results, **the machine must be powered at 36V**. FIMAP recommends using four 6V 210Ah$_{C5}$ gel batteries.

The dimensions of the battery holder compartment are: 215x260x725 mm (length x height x width, according to the work direction).

N.B.: the function board in the machine is programmed by the factory to work with the following type of battery: Gel60. To change it, see "MENÙ BATTERY TYPE (GENERAL BATTERY)" on page 16 in the "OPERATOR INTERFACE CONFIGURATION MANUAL" consigned together with the machine documentation.

BATTERY MAINTENANCE AND DISPOSAL

For battery maintenance and recharging, follow the instructions contained in the document provided by the battery manufacturer.
When the batteries are dead, they must be disconnected by a technician from a FIMAP service centre; using suitable lifting devices, remove the batteries from the machine and take them to a specific disposal centre.

N.B.: used batteries, which are classified as hazardous waste, must be returned to a legally authorised waste disposal authority.

INSERTING THE BATTERIES IN THE MACHINE

To fit the batteries inside the machine, contact an FIMAP assistance centre technician.

WARNING: FIMAP declines all responsibility for any damage to property or injury persons in the event that the batteries are replaced by an unauthorized technician.

RECHARGING THE BATTERIES

WARNING: the batteries must be charged prior to first use and whenever they no longer provide sufficient power for the job to be carried out.

N.B.: before recharging, carefully read the Use and Maintenance Manual of the batteries you want to use.

N.B.: before recharging, carefully read the Use and Maintenance Manual of the battery charger you want to use.

WARNING: FIMAP disclaims all responsibility for any damage to property or injury to persons if the batteries are recharged by an unauthorised technician or anyone non correctly instructed on how to perform the task.

1. Bring the machine to the battery recharging area.

ATTENTION: Park the machine in an enclosed place, on a flat and level surface; near the machine there must be no objects that could either damage it, or be damaged through contact with it.

ATTENTION: the room where the batteries are recharged must be adequately ventilated to prevent the accumulation of gases that leak from batteries.

WARNING: the place designated for this operation must comply with current regulations concerning safety at work and current environmental protection regulations.

CAUTION: it is recommended to wear the appropriate PPE (Personal Protective Equipment), suitable for the work to be carried out.

2. Do everything necessary to ensure the machine is in a safe condition. See "DASHBOARD" on page 25.
3. Grip the handle (1) and turn the upper body (2) to its maintenance position (**Fig.1**).

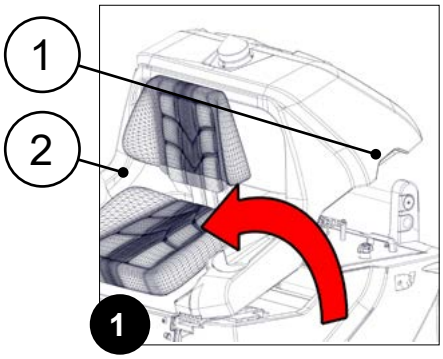

WARNING: the following operations must be carried out by qualified personnel. Incorrect operations could result in machine malfunctions.

For versions without an on-board battery charger:

A. Disconnect the connector on the machine power cable from the connector on the battery power cable.
B. Connect the connector on the battery charger cable to the connector on the battery power cable.

N.B.: The battery charger coupling connector comes inside the bag containing this instruction booklet, and must be assembled on the battery charger cables as indicated in the instructions.

ATTENTION: before connecting the battery box to the battery charger, make sure it is suitable for the type of battery you want to charge.

N.B.: carefully read the user and maintenance instructions for the battery charger to be used for charging.

CAUTION: keep the upper body in the maintenance position throughout the battery recharging cycle, to allow the gas fumes to escape.

C. Connect the battery charger cable to the power supply socket.
D. When the recharging cycle has been completed, disconnect the connector on the battery charger cable from the connector on the battery power cable.
E. Connect the connector on the machine power cable to the connector on the battery power cable.
F. Grip the handle (1) and turn the upper body (2) to its working position.

For versions with an on-board battery charger:

A. Remove the cap (3) from the battery charger socket (**Fig.2**).

CAUTION: before connecting the batteries to the battery charger, make sure it is suitable for the batteries used.

WARNING: before inserting the battery charger power cable in the socket, make sure there is no condensation or any other type of liquid.

N.B.: the battery charger power cable is consigned in the bag containing this instruction booklet.

B. Plug the battery charger cable into the mains socket.
C. Connect the connector (4) on the battery charger power cable to the socket on the charger itself (**Fig.3**).

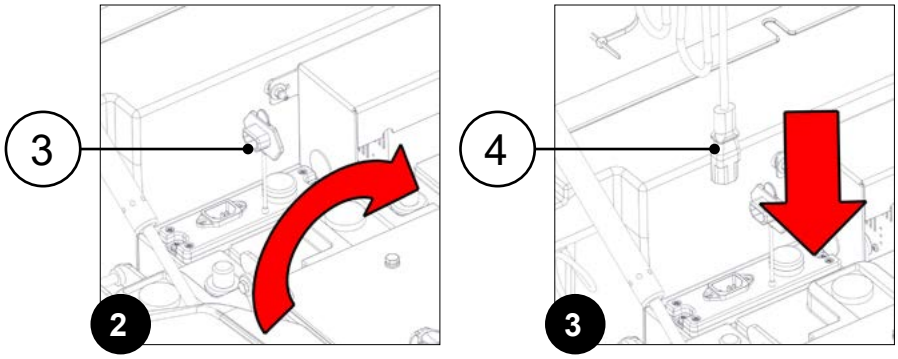

N.B.: The battery charger coupling connector comes inside the bag containing this instruction booklet, and must be assembled on the battery charger cables as indicated in the instructions.

ATTENTION: before connecting the battery box to the battery charger, make sure it is suitable for the type of battery you want to charge.

N.B.: carefully read the user and maintenance instructions for the battery charger to be used for charging.

CAUTION: keep the upper body in the maintenance position throughout the battery recharging cycle, to allow the gas fumes to escape.

D. Connect the battery charger cable to the power supply socket.
E. When the recharging cycle has been completed, disconnect the connector on the battery charger cable from the connector on the battery power cable.
F. Connect the connector on the machine power cable to the connector on the battery power cable.
G. Grip the handle (1) and turn the upper body (2) to its working position.

ADJUSTMENT OF DRIVING POSITION

The proper adjustment of the driving position provides a greater sense of comfort when using the machine.

CORRECT POSITION ON THE SEAT: make sure you sit upright and that your back and that your lower back and spine are at 90°.

LONGITUDINAL SEAT ADJUSTMENT: The seat should always be positioned using the pedals as a reference. To adjust the seat, use the lever located under it.

N.B.: the distance should be adjusted so that the knees are slightly bent (about 120°) when the pedals are fully pressed to the floor.

N.B.: adjust the distance of the seat so that the brake pedal reaches the end of its stroke when pressed.

N.B.: your feet should be positioned keeping your heels on the footboard; the pedals should be pressed using the part of the foot directly behind your toes.

N.B.: the ideal position is that which allows you to grip the steering wheel correctly with the palms of your hands slightly below shoulder level. With a good grip on the steering wheel, the elbows should be bent by about 120°. They should be at least 30 cm between the middle of the steering wheel and our breastbone. In any case, this distance should be no more than 45 cm.

ADJUSTING THE ARMRESTS (OPTIONAL): the armrests should be inclined to make using the machine comfortable.

N.B.: to adjust the armrest, use the runner located under it.

N.B.: taking the right armrest as a reference, if the wheel is turned outwards the inclination of the armrest is increased. Taking the left armrest as a reference, if the wheel is turned inwards the inclination of the armrest is increased.

WEARING THE SAFETY BELT (OPTIONAL) CORRECTLY: the machine comes equipped with a sub-abdominal safety device, which allows the operator to remain anchored to the driver's seat. To secure the safety belt, you must first be sitting in the driver's seat; take the mobile part of the belt, wrap it round the abdomen and insert the mobile part in the slit in the fixed part.

N.B.: adjust the horizontal part of the belt so it is as tight as possible around the pelvis. The belt should be pulled and put as low as possible on the pelvis bone, and not on the belly.

ASSEMBLING THE CENTRAL BRUSH

To mount the brush in the central tunnel, proceed as follows:

1. Take the machine to the maintenance area.
2. Do everything necessary to ensure the machine is in a safe condition. See "DASHBOARD" on page 25.

CAUTION: it is recommended to wear the appropriate PPE (Personal Protective Equipment), suitable for the work to be carried out.

3. Open the left inspection door (1) (**Fig.1**).
4. Loosen the knobs (2) of the central brush inspection carter (**Fig.2**).
5. Loosen the knob (3) of the central brush lifting arm (**Fig.3**).

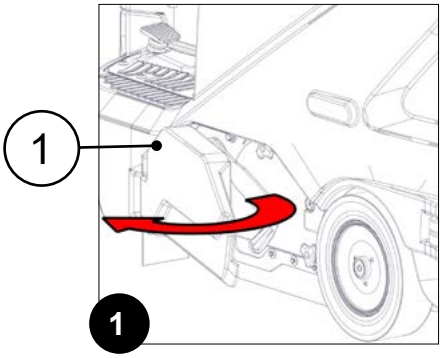

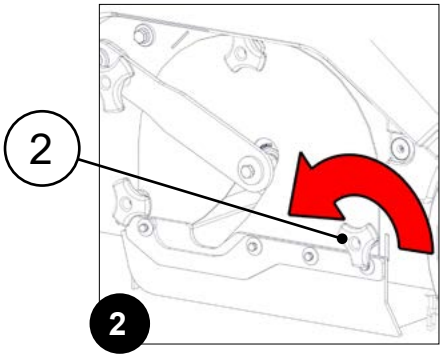

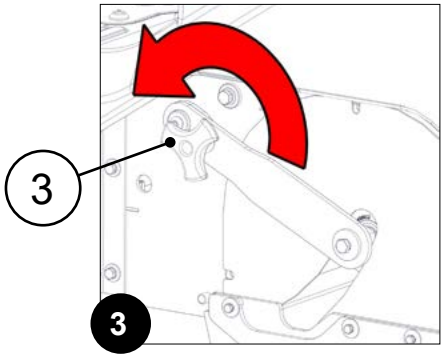

6. Remove the central brush inspection carter (4) (**Fig.4**).
7. Insert the brush in the tunnel in the machine frame (**Fig.5**).

N.B.: when the brush is mounted correctly, the cusps on the brush form an arrow ^ when seen from above in the forward movement direction (**Fig.6**).

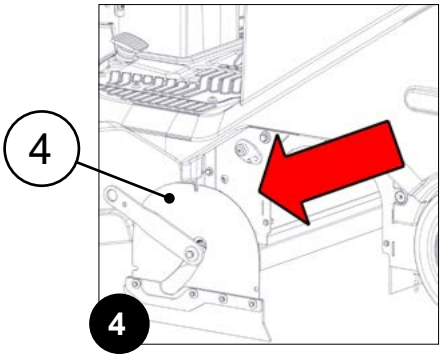

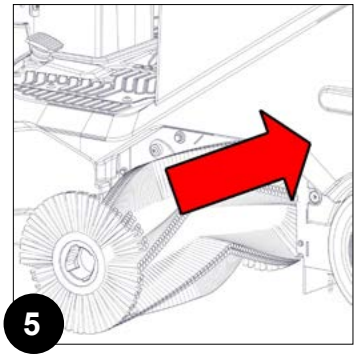

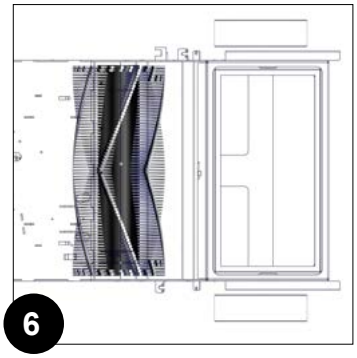

8. Rotate the brush until the fastening hooks (5) in the driving towing hook (6) (**Fig. 7**) correctly enter the slots (7) in the brush (**Fig.8**).
9. Insert the central brush inspection carter (4) (**Fig.9**).

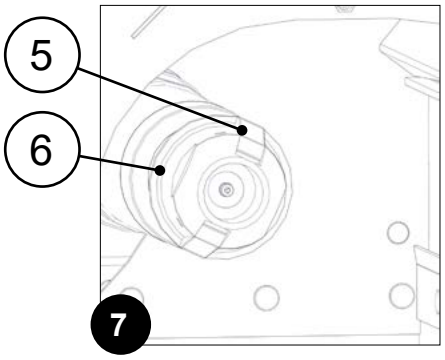

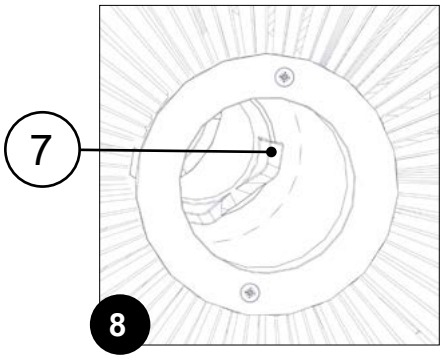

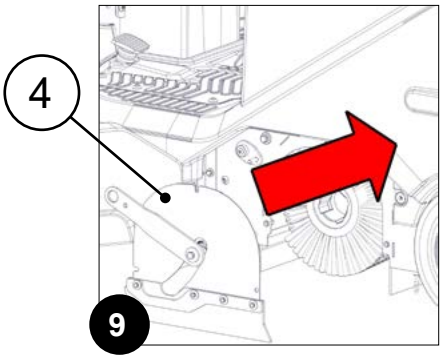

ATTENTION: make sure the fastening hooks (8) in the idle towing hook (9) (**Fig. 10**) correctly enter the slots (10) in the brush (**Fig.11**).

10. Tighten the knob (3) of the central brush lifting arm (**Fig.12**).

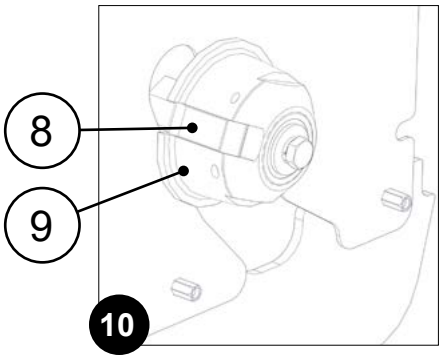

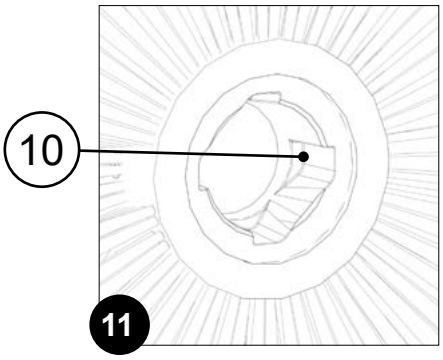

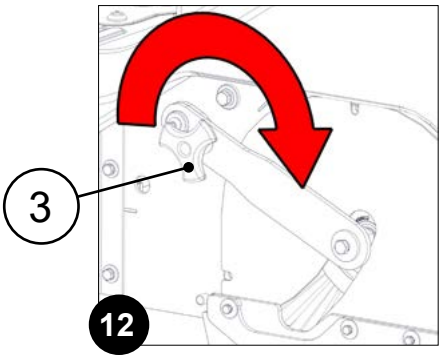

11. Tighten the knobs (2) of the central brush inspection carter (**Fig.13**).
12. Close the left-hand inspection door (1) (**Fig.14**).

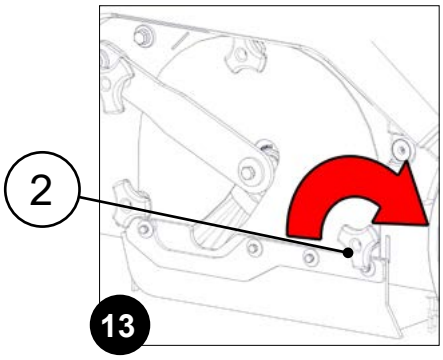

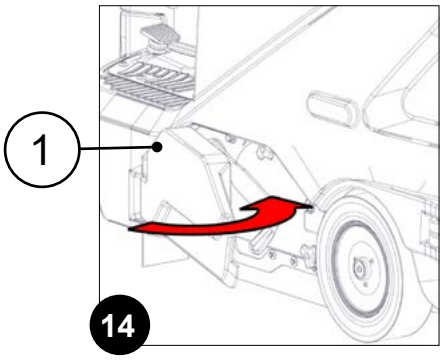

ASSEMBLING THE SIDE BRUSHES

To assemble the side brushes, proceed as follows:

1. Take the machine to the maintenance area.
2. Do everything necessary to ensure the machine is in a safe condition. See "DASHBOARD" on page 25.

CAUTION: it is recommended to wear the appropriate PPE (Personal Protective Equipment), suitable for the work to be carried out.

3. Go to the right-hand side of the machine.
4. Remove the knob (1) fixing the side brush to the gear motor by rotating the right brush clockwise and the left brush anti-clockwise (**Fig.1**)..
5. Remove the washer (2) holding the side brush in place (**Fig.2**).
6. Insert the side brush, making sure to correctly position the pins (3), present in the brush support, in the holes (4), present in the brush (**Fig.3**).

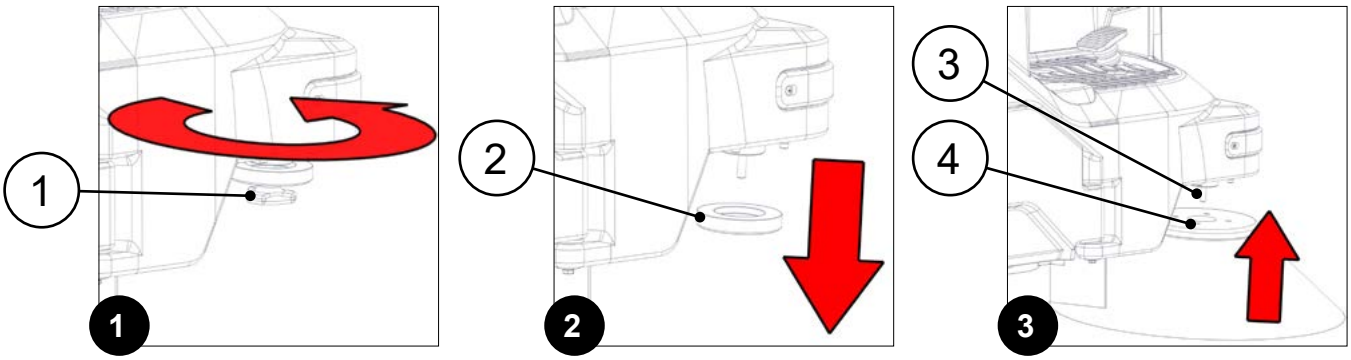

7. Fix the brush to the flange using the knob (1), remembering to put the washer (2) in between the knob and the brush.
8. Once this brush has been fitted, move on to the left-hand one (if used).

ASSEMBLING THE VACUUM WAND FILTER BAG

To assemble the vacuum wand filter bag, proceed as follows:

1. Take the machine to the maintenance area.
2. Do everything necessary to ensure the machine is in a safe condition. See "DASHBOARD" on page 25.

CAUTION: it is recommended to wear the appropriate PPE (Personal Protective Equipment), suitable for the work to be carried out.

3. Shift the driving seat forwards.
4. Disconnect the vacuum hose (1) from the sleeve (2) on the machine (**Fig.1**).
5. Rotate the retainer knobs (3) on the filter-holder compartment cover (4) to the maintenance position (**Fig.2**).
6. Remove the filter-holder compartment cover.
7. Attach the filter bag (5) to the filter support (6) on the filter-holder compartment cover (**Fig.3**).

ATTENTION: when attaching the filter bag to the filter support, make sure the filter is correctly inserted in the vacuum nozzle and take care not to damage the cardboard support in the filter bag itself.

8. Repeat the operations in reverse order to reassemble all the parts.

ATTENTION: insert the filter in its housing correctly, making sure it does not bend or break.

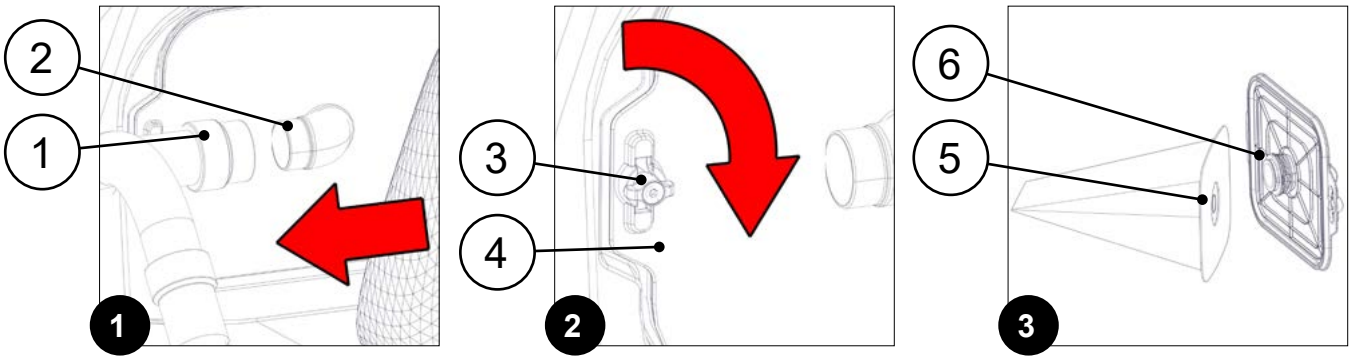

WORK PREPARATION CHECKLIST

Check for any fluid leaks	If you note any faults, contact your FIMAP service centre of reference or the one closest to you. Alternatively, you can send an email to service@fimap.com or visit the website www.fimap.com
Check the horn; the front and rear lights; the safety lights and the alarm (if installed)	If you note any faults, contact your FIMAP service centre of reference or the one closest to you. Alternatively, you can send an email to service@fimap.com or visit the website www.fimap.com
Check the service brakes and steering are functioning properly	If you note any faults, contact your FIMAP service centre of reference or the one closest to you. Alternatively, you can send an email to service@fimap.com or visit the website www.fimap.com
Check the electric brake is correctly engaged	If you note any faults, contact your FIMAP service centre of reference or the one closest to you. Alternatively, you can send an email to service@fimap.com or visit the website www.fimap.com
Check the tyres to make sure they are not damaged	If you note any faults, contact your FIMAP service centre of reference or the one closest to you. Alternatively, you can send an email to service@fimap.com or visit the website www.fimap.com
Check the charge level of the battery box	Check the charge level of the battery box on the control display, and recharge it if necessary. See "RECHARGING THE BATTERIES" on page 32
Adjust the driver's seat	Before beginning the job, adjust the driver's seat. See "ADJUSTMENT OF DRIVING POSITION" on page 34
Check whether the debris hopper (in the rear part of the machine) is full	If the debris hopper is full, empty it. See "EMPTYING THE DEBRIS HOPPER" on page 44
Check all the dust guards of the central brush compartment for signs of damage or wear	If you note any faults, contact your FIMAP service centre of reference or the one closest to you. Alternatively, you can send an email to service@fimap.com or visit the website www.fimap.com
Check the central brush is not dirty, damaged or worn.	If the brush (in the central machine tunnel) is dirty, clean it. See "CLEANING THE CENTRAL BRUSH" on page 60
	If the brush (in the central machine tunnel) is worn or damaged, replace it. See "CENTRAL BRUSH REPLACEMENT" on page 65

Check the side brush is not dirty, damaged or worn.	If the brush (in the side brush head) is dirty, clean it. See "CLEANING THE SIDE BRUSHES" on page 61
	If the brush (in the side brush head) is worn or damaged, replace it. See "ASSEMBLING THE SIDE BRUSHES" on page 66
Check the front dust guard kit for signs of damage or wear	If you note any faults, contact your FIMAP service centre of reference or the one closest to you. Alternatively, you can send an email to service@fimap.com or visit the website www.fimap.com
Check the condition of the vacuum filter on the debris hopper	If the collection filter is clogged or dirty, clean it. See "CLEANING THE PANEL FILTER" on page 61 or "CLEANING THE POCKET FILTER (OPTIONAL)" on page 62

WORKING MODE

TRANSFER WORKING MODE

In TRANSFER working mode, both the central brush and the side brushes are in their idle positions. This working mode is used to transfer the machine from the work site to the maintenance site.

To use the machine in transfer mode, do the following:

1. Carry out all the checks listed in the "WORK PREPARATION CHECKLIST" on page 38.
2. Sit on the driver's seat.
3. Insert the key (1) into the main switch of the machine, located on the right side of the steering column. Bring the main switch to its "I" position by turning the key (1) a quarter turn clockwise (**Fig.1**).

N.B.: at switch-on, the control display visualises a series of pages, the last of which shows the machine programming characteristics. See "STARTING WORK" on page 41.

4. Make sure the central brush is in its idle position. If it isn't, rotate the lever (2) anticlockwise (**Fig.2**).
5. Make sure the side brush is in its idle position. If it isn't, rotate the lever (3) anticlockwise (**Fig.3**).

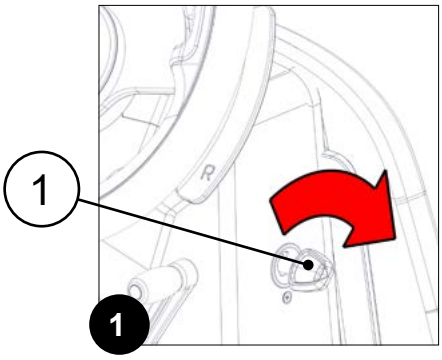

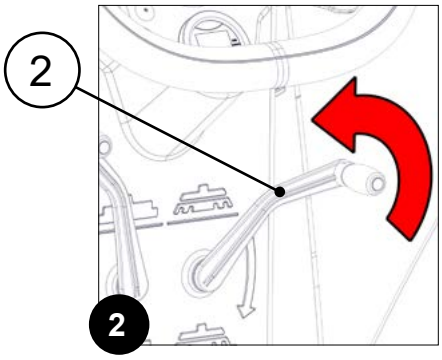

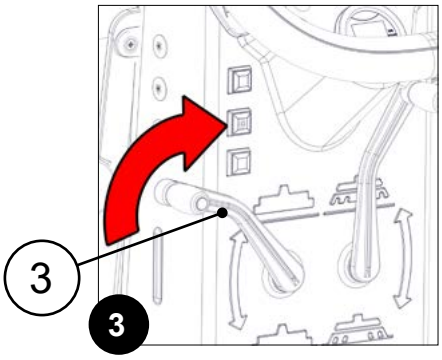

6. Press the drive pedal (4) (**Fig.4**) to begin moving the machine.

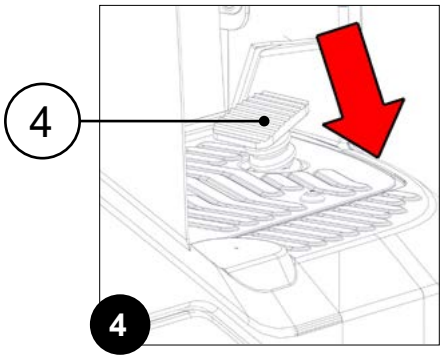

SWEEPING MODE

In SWEEPING mode, both the central brush and the side brushes are in their work positions. This working mode is used to collect the debris from the floor.

To use the machine in sweeping mode, proceed as follows:

1. Carry out all the checks listed in the “WORK PREPARATION CHECKLIST” on page 38.
2. Sit on the driver’s seat.
3. Insert the key (1) into the main switch of the machine, located on the right side of the steering column. Bring the main switch to its "I" position by turning the key (1) a quarter turn clockwise (**Fig.1**).

N.B.: at switch-on, the control display visualises a series of pages, the last of which shows the machine programming characteristics. See “STARTING WORK” on page 41.

4. Bring the central brush to its work position, rotating the lever (2) clockwise (**Fig.2**).
5. Press the drive pedal (3) (**Fig.3**) to begin moving the machine.

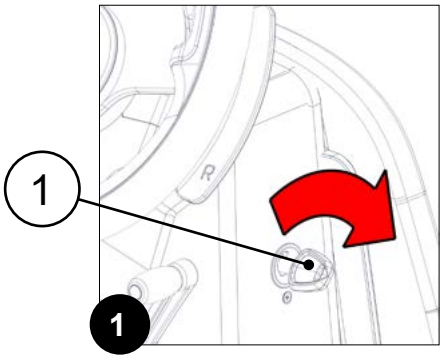

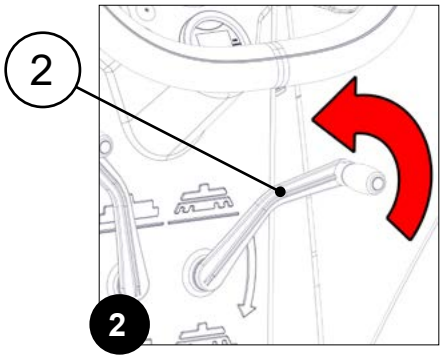

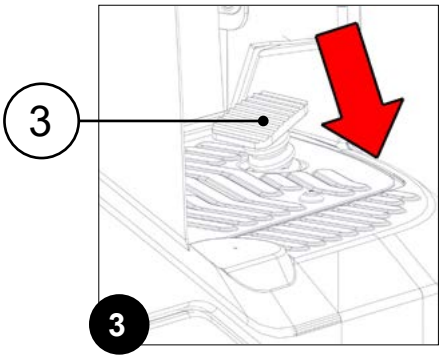

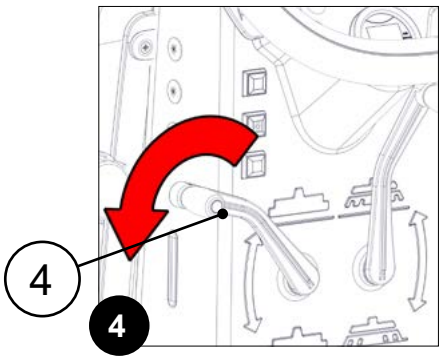

N.B.: as soon as the central brush reaches the work position, the gearmotor associated with it will begin to work.

N.B.: the suction motor is only started up when the central brush is in the working position.

N.B.: if it is necessary to activate the side brushes during the work, turn the lever (4) anticlockwise and press on the steering column (**Fig.4**).

N.B.: as soon as the side brushes reach the work position, the gear motor associated with these will begin to work.

STARTING WORK

We will take sweeping mode (with the ECO MODE working program) as an example. To start working, proceed as follows:

1. Carry out all the checks listed in the “WORK PREPARATION CHECKLIST” on page 38.
2. Sit on the driver’s seat.
3. Insert the key (1) into the main switch of the machine, located on the right side of the steering column. Bring the main switch to its "I" position by turning the key (1) a quarter turn clockwise (**Fig.1**).
4. When the machine is switched on, the control display shows the screen that provides access to the machine's programming features (**Fig.2**).

N.B.: the upper left area of the screen displays the value of the nominal battery voltage (2), while the upper right area displays the minimum permissible inhibit value (3) (**Fig.2**).

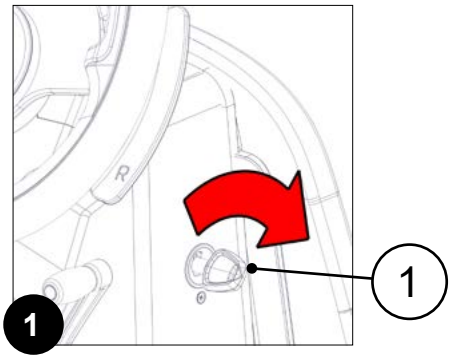

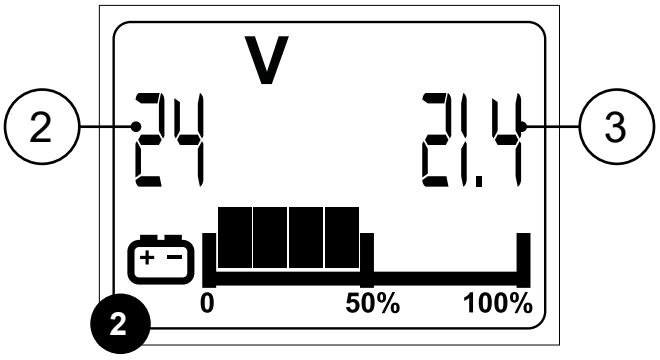

N.B.: the type of battery displayed (3) is the one selected in the parameter list of the function board; to change the type of battery, contact your FIMAP service centre of reference or the one closest to you; Alternatively, you can send an email to service@fimap.com, or visit the website at www.fimap.com

N.B.: the work screen will appear after the screen containing the machine's programming characteristics.

5. Bring the central brush to its work position, rotating the lever (4) clockwise (**Fig.3**).
6. Press the drive pedal (5) (**Fig.4**) to begin moving the machine.

N.B.: as soon as the central brush reaches the work position, the gearmotor associated with it will begin to work.

N.B.: the suction motor is only started up when the central brush is in the working position.

N.B.: if it is necessary to activate the side brushes during the work, turn the lever (6) anticlockwise and press on the steering column (**Fig.5**).

N.B.: as soon as the side brushes reach the work position, the gear motor associated with these will begin to work.

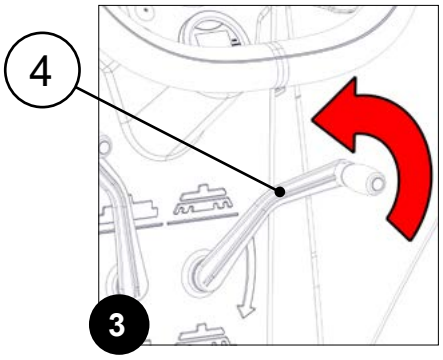

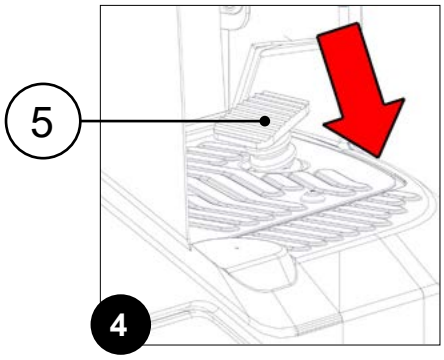

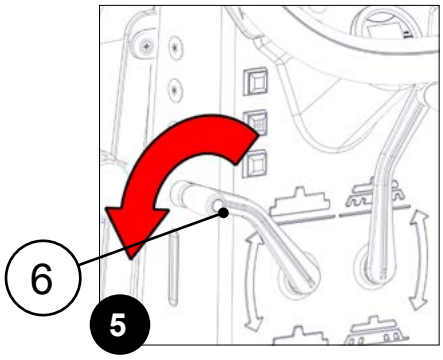

7. The machine will now work at full efficiency levels until the end of the job, or until the battery box needs recharging.

N.B.: pick up any large pieces of waste before performing the cleaning operations; pick up wire, tape, string, large pieces of wood, or any other types of refuse that could wrap around the brushes or become entangled.

N.B.: drive the machine along the most linear path possible. Avoid hitting any obstacles and scratching the sides of the machine. Overlap the working widths by several centimetres. To avoid damage to carpet floors, do not turn the steering wheel from one side to the other while the machine is stationary.

N.B.: avoid turning the steering wheel too sharply while the machine is moving, as the machine reacts quickly to steering wheel movements. Avoid swerving suddenly, unless there is an emergency.

N.B.: adjust the machine speed and brush pressure as necessary for the job in hand. Use the appropriate brush pressure settings for the areas being cleaned.

N.B.: remember only the central brush has a dust vacuum system; the side brushes can only channel dirt towards the central part of the machine.

N.B.: if the results are not satisfactory, stop and refer to the TROUBLESHOOTING section of this manual. See "TROUBLESHOOTING" on page 69.

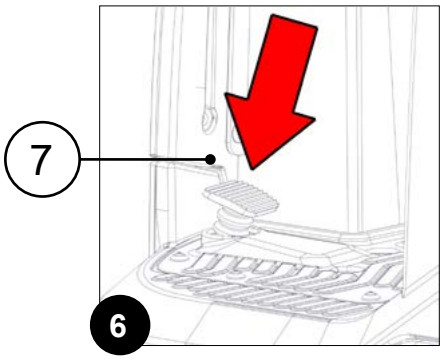

N.B.: in the left part of the footboard, there is a brake pedal (7) (**Fig.6**) which can be used to stop the machine when required.

N.B.: when the brake pedal (7) is pressed, the red rear lights become brighter to indicate that the service brake pedal has been pressed.

N.B.: if the accelerator pedal (5) is released while moving, the machine electronics start to slow down with a gentle deceleration ramp. The electric brake is automatically engaged only when the machine stops completely.

N.B.: the machine is fitted with a mechanical pedal brake in addition to the machine electronics that handle the braking process. The mechanical braking action depends on the degree of force applied to the pedal (7).

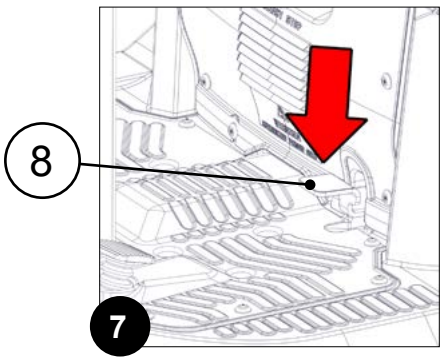

N.B.: the machine is equipped with a front flap control pedal (8), to be used when the operator needs to collect bulky waste such as a plastic bottle or a can.

ATTENTION: to raise the front flap, press and hold the pedal (8) on the pedalboard (Fig.6). As soon as the waste is collected, remember to release the pedal (8) in order to lower the front flap.

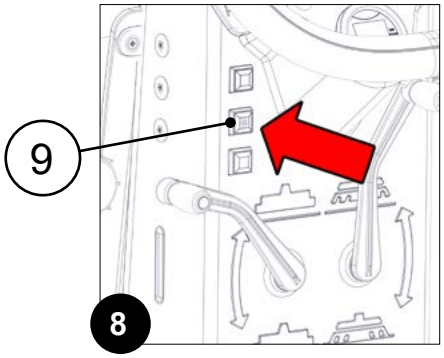

N.B.: the machine is equipped with a suction motor controlled by a button (9), located on the left side of the steering column (**Fig.8**).

WARNING: if driving over a puddle or a wet surface, remember to turn off the suction motor by pressing the button (9).

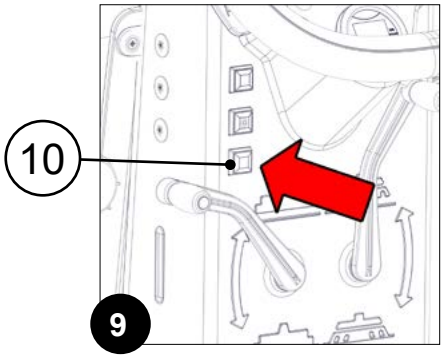

N.B.: the machine is equipped with an electric filter shaker controlled by a button (10), located on the left side of the steering column (**Fig.9**), which should be used when the filter is clogged.

ATTENTION: if it becomes necessary to use the filter shaker, proceed as follows:

- stop the machine
- turn off the suction motor by pressing the button (8)
- activate the filter shaker by pressing the button (9), and hold down for up to ten seconds.

N.B.: Drive the machine slowly on inclines and descents. Use the brake pedal to control the machine speed. Where there is a slop, carry out the scrubbing by moving the machine upwards rather than downwards.

ATTENTION: when using the machine, slow down on slippery or sloping surfaces.

ATTENTION: the steering wheel must be turned fully to the right or left if the machine is stopped on a slope.

ATTENTION: slow down on ramps and slippery surfaces.

ATTENTION: do not use the machine in areas where the ambient temperature is higher than 43°C (110°F). Do not use the scrubbing functions in areas where the ambient temperature is less than freezing 0°C (32°F).

ATTENTION: in transport mode, the machine can only be moved on ramps up to 14% (8°) if the debris hopper is full; in sweeping mode, with GVW, it can work on slopes up to 12.5% (7°). For all other technical data, contact the FIMAP service centre of reference or the one closest to you, or visit the website www.fimap.com.

N.B.: after using the machine, follow the daily maintenance procedures. See "MAINTENANCE PLAN" on page 52.

BATTERY CHARGE LEVEL INDICATOR

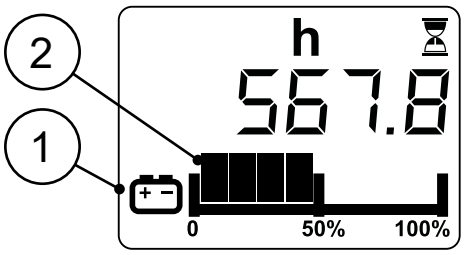

The control display is present on the control panel of the machine, the percentage of battery charge is visible in the lower part of the screen. The battery charge percentage indicator consists of two symbols, the first represented by a graphic symbol (1), the second by a battery icon (2).

N.B.: the control display shows the percentage of battery charge with respect to their maximum capacity.

N.B.: the graphic symbol (1) consists of five charge levels, each residual battery charge. of which represents approximately 20% of

N.B.: when the residual charge is at 20% the graphic symbol starts to flash, in these conditions bring the machine to the area used for charging the battery box.

N.B.: a few seconds after the battery box charge level reaches 20%, the brush motor switches off automatically. The remaining charge is sufficient for completing the drying task before recharging the battery box.

N.B.: a few seconds after the battery charge level reaches 10%, the suction motor switches off automatically. With the remaining charge, it is still possible, however, to move the machine to the designated battery box recharging station.

HOUR METER

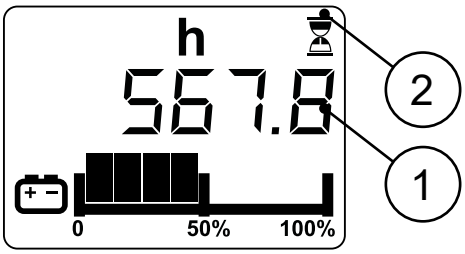

The control display is present on the control panel of the machine, the hour meter (1) is present in the upper part of the screen.
The hour meter allows the user to view the machine's total time of use via a series of numbers.

N.B.: the digits preceding the (“.”) identify the hours, while the digits that come after the “.” identify the tenths of an hour, a tenth of an hour corresponds to six minutes.

N.B.: the hour meter is running when the hourglass symbol (2) flashes.

EMPTYING THE DEBRIS HOPPER

If you notice that the machine can no longer collect the dirt from the floor while cleaning, the debris hopper in the rear part of the machine might be full.

To empty the debris hopper, proceed as follows:

1. Take the machine to the designated waste disposal area.

N.B.: the place designated for this operation must comply with current regulations concerning safety at work and current environmental protection regulations.

2. Bring the front of the machine close to the waste container.
3. Activate the filter shaker by pressing the button (1) on the control panel (**Fig.1**).

ATTENTION: Do not keep the switch (1) pressed longer than ten seconds; repeat this operation two or three times.

4. Perform all the operations required to secure the machine. See "MACHINE SAFETY" on page 29.

CAUTION: it is recommended to wear the appropriate PPE (Personal Protective Equipment), suitable for the work to be carried out.

5. Turn the latches (2) to release the debris hopper (**Fig.2**) (turn the left latch anti-clockwise and the right latch clockwise).
6. Gripping the handle (3) on the debris hopper (**Fig.3**), remove it from the machine.

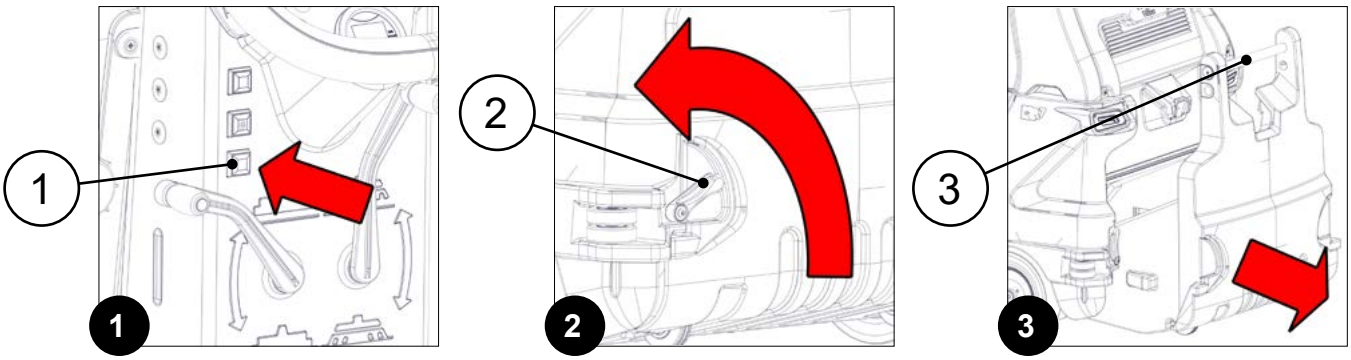

7. Take the debris hopper to the appropriate location for unloading and empty it.

N.B.: in the case of machines fitted with removable debris hopper bins, take the bins out of the hopper and empty them. When they have been emptied, reposition them in the debris hopper.

ATTENTION: when using the machine, pay attention to the filling of the debris hopper; it can contain up to 170kg (375 lb). Respect the general rules for manual movement of the loads. If heavy materials are incorrectly lifted and/or moved, this may cause back injury or other types of personal injury.

ATTENTION: when using the machine with removable debris hopper bins, pay attention to the filling of the bins; a single one can contain up to 30kg (66 lb). Respect the general rules for manual movement of the loads. If heavy materials are incorrectly lifted and/or moved, this may cause back injury or other types of personal injury.

8. Gripping the handle (3), insert the debris hopper in the machine (**Fig.4**).
9. Turn the latches (2) to fix the debris hopper to the body (**Fig.5**) (turn the left latch clockwise and the right latch anti-clockwise).

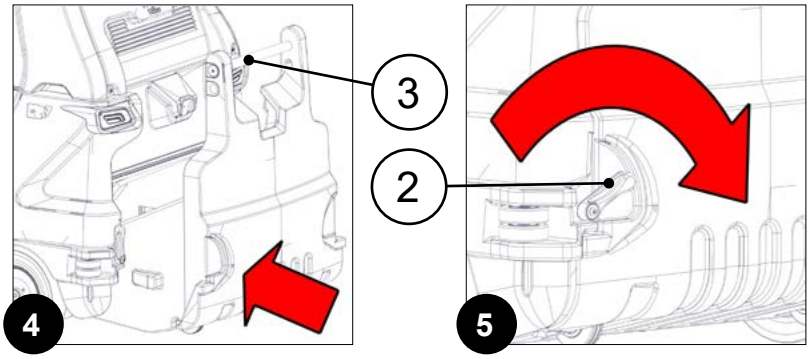

ADDITIONAL FUNCTIONS

VACUUM SYSTEM ACTIVATION/DEACTIVATION

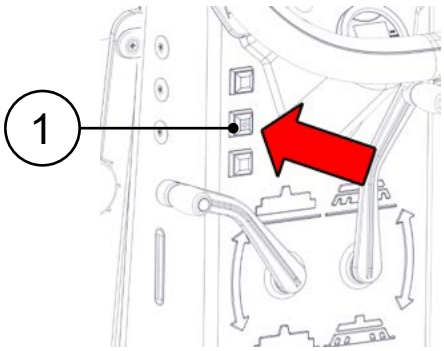

If you pass over a wet surface while using the machine, deactivate the vacuum system to avoid damaging the vacuum filter. To deactivate the vacuum system, use the switch (1) on the control panel.

N.B.: when the suction system is active, the LED light on the button (1) will be illuminated.

FILTER SHAKER ACTIVATION/DEACTIVATION

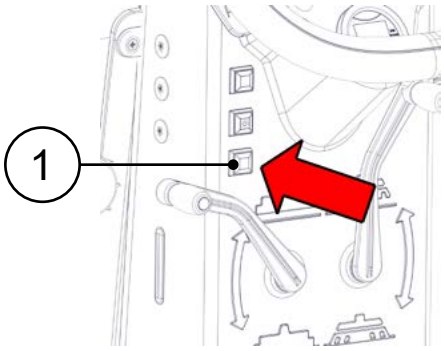

If the suction filter becomes clogged during use of the machine, stop the machine and press the switch (1) on the control panel.

WARNING: if it becomes necessary to use the filter shaker, proceed as follows:

- stop the machine
- turn off the suction motor by pressing the button (8)
- activate the filter shaker by pressing the button (9), and hold down for up to ten seconds.

BUZZER

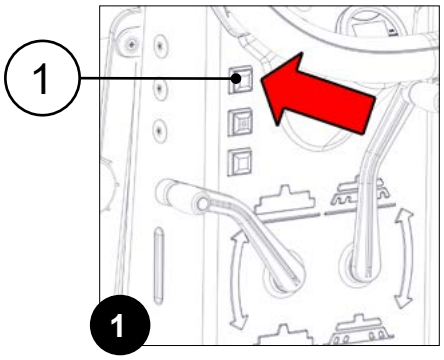

The machine is equipped with a buzzer. if you need to sound a warning, just press the button (1) on the steering column (**Fig.1**).

EXTRA PRESSURE FUNCTION (CENTRAL BRUSH)

The EXTRA PRESSURE (CENTRAL BRUSH) function can be used when working in extremely dirty environments, and guarantees maximum machine performance.

THE EXTRA PRESSURE (CENTRAL BRUSH) function can be activated/deactivated by shifting the lever (1) underneath the steering wheel (**Fig.1**).

N.B.: when the EXTRA PRESSURE (CENTRAL BRUSH) function is active on the dashboard, the red LED will be on (2) (**Fig.2**).

N.B.: selecting the EXTRA-PRESSURE (CENTRAL BRUSH) function, the work parameter values will be automatically changed.

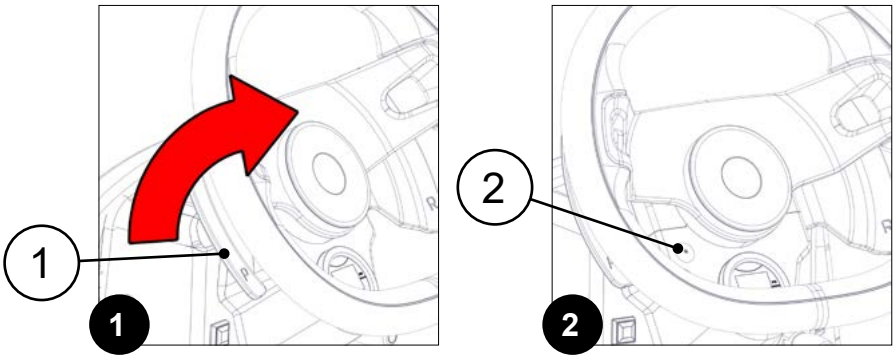

EMERGENCY BUTTON

The machine is equipped with an emergency button. If any problems are encountered during the work activities, do the following:

1. Press the emergency button (1) on the control panel (**Fig.1**).

CAUTION: this command interrupts the electrical circuit that goes from the batteries to the machine system.

2. Once the machine has stopped, turn the main switch to its “0" position by turning the key (2) a quarter turn anti-clockwise (**Fig.2**).

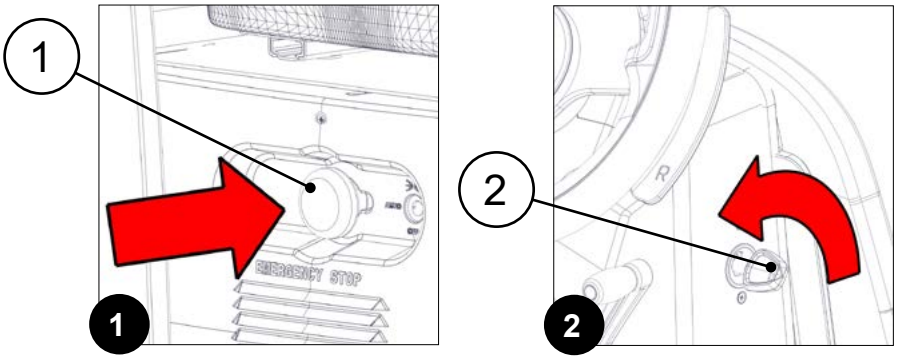

3. Deactivate the emergency button (1) by pulling it.
4. Eliminate the anomaly that caused the problem.

N.B.: If the anomaly persists, contact a technician at the FIMAP service centre.

5. Carry out all the procedures for turning on the machine.

BRAKING CONTROL

The function board in the machine manages a gradual deceleration when the accelerator pedal (1) is released (**Fig.1**). In addition, the machine is fitted with a mechanical brake commanded by the pedal (2) (**Fig.2**).

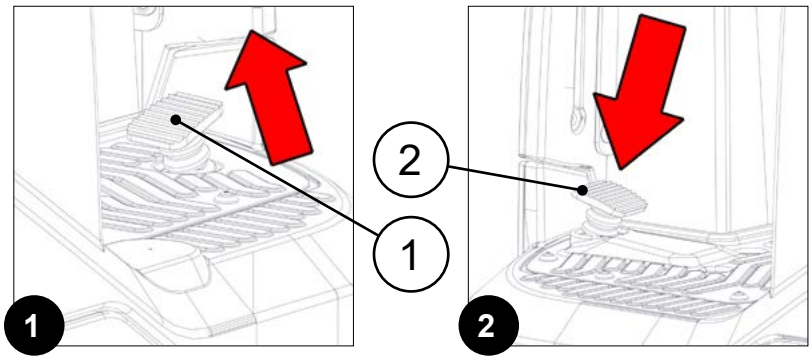

N.B.: if the accelerator pedal (1) is released while moving, the machine electronics start to slow down with a gentle deceleration ramp that will stop the machine in a parameterised "DECELERATION RAMP STOP" time. The electric brake is automatically engaged only when the machine stops completely.

N.B.: the machine is fitted with a mechanical pedal brake (2) in addition to the machine electronics that handle the braking process. The mechanical braking action depends on the degree of force applied to the pedal (2).

REVERSE GEAR

The machine is equipped with electronic traction control. To engage the reverse gear, do the following:

1. Stop the machine.
2. Engage the “REVERSE GEAR ACTIVATION/DEACTIVATION” lever (1) underneath the steering wheel (**Fig.1**).
3. Press the drive pedal (2) (**Fig.2**) to start the machine moving in reverse.

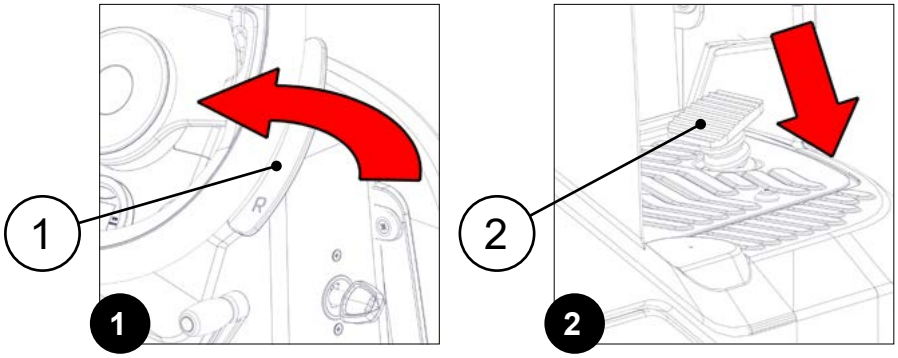

CAUTION: the reverse speed is slower than the forward movement, to comply with occupational safety regulations. To change the reverse speed, see “MENÙ BACKWARD MAX SPEED (TRACTION SPEED SETS)” on page 37 of the "OPERATOR INTERFACE CONFIGURATION MANUAL" consigned with the machine documentation.

N.B.: in order to disengage the reverse gear, move the lever (1) underneath the steering wheel again.

N.B.: Once the lever has been engaged (1), the acoustic signalling device will be activated in order to signal that the machine's reverse gear has been engaged.

OPTIONAL FUNCTIONS

SERVICE LIGHTS

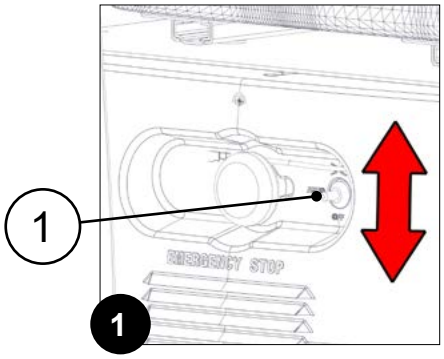

Upon request, the machine can be equipped with the exclusive service lights pack.
The service lights package offers increased visibility of the parts which could require operator inspection, illuminating the relative zones with LED lights.

To activate the service lights, use the switch (1) under the control panel (**Fig.1**). This switch has three working positions:

• ON: set the switch to this position when you want the service lights to remain on, regardless of the status of the microswitches in the various doors.

- OFF: set the switch to this position when you want the service lights to remain off.
- AUTOMATIC: set the switch to this position when you want the service lights to turn on only when the microswitches in the various doors are activated.

WORKING HEADLIGHTS

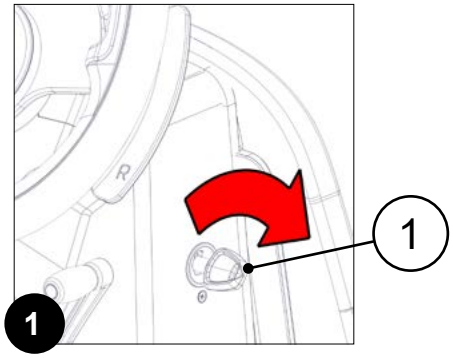

Upon request, the machine can be equipped with front and rear lights.
When the machine is turned on using the ignition switch (1), located on the right side of the steering column (**Fig.1**), the front position lights and the tail lights will turn on.

N.B.: to activate or deactivate the working headlights function, it is necessary to modify the “WORKLIGHT ENABLING” parameter. See “MENÙ WORKLIGHT ENABLE (GENERAL CONFIG)” on page 22 of the “OPERATOR INTERFACE CONFIGURATION MANUAL” consigned with the machine documentation.

BLUE SAFETY LIGHT

On request, the machine can be equipped with a blue safety spotlight above the front dashboard; the purpose of this light is to warn pedestrians of the approach of the machine.

The device is suitable for both indoor and outdoor applications.

It is ideal for use inside warehouses or on forecourts, where architectural structures, furniture or storage racks can prevent full visibility of the moving machine.

N.B.: a blue light is projected onto the ground, warning of the machine's approach and signalling in advance that it will be passing through the area.

N.B.: The blue light safety system increases the overall level of safety by making the vehicle visible when in motion.

N.B.: this system makes it possible to reduce risks in areas where vehicles and people cross over when the machine is in motion.

N.B.: the blue safety light is connected to the machine main switch.

SOS DEVICE

Upon request, the machine can be equipped with an automatic SOS device that allows the user to automatically request technical assistance. When the SOS button is pressed, the machine sends a report directly to the Designated Authorised Workshop (valid only for those who have signed up for one of the service agreements), which will immediately perform a diagnostic check on the machine to determine the type of fault encountered. The SOS device can reduce waiting times for maintenance and machine downtime, thus increasing productivity.
To activate the SOS device, do the following:

1. When an anomaly occurs, stop the machine.
2. Open the door (1) covering the SOS button, located near the steering wheel (**Fig.1**).
3. Press the SOS button (2) (**Fig.2**).

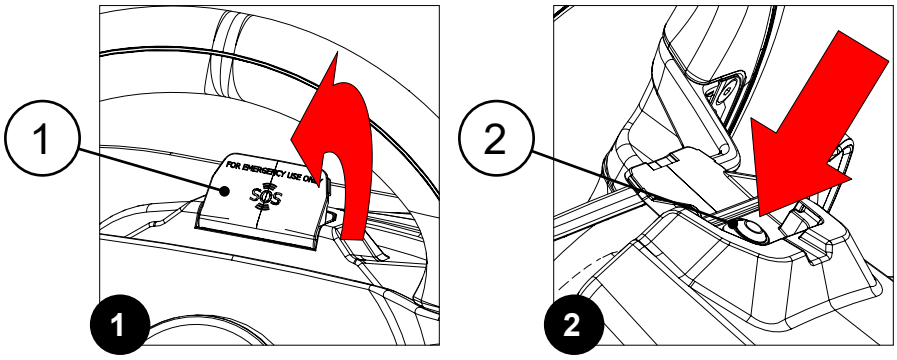

N.B.: In order to activate the SOS device, the machine must be equipped with the automatic fleet management kit (FFM).

N.B.: in order to send a technical assistance request the machine needs to be on and should be in a zone with data traffic coverage.

VACUUM WAND

Upon request, the machine can be equipped with a vacuum wand kit for removing waste in areas that are difficult to reach with the machine itself.
To use the vacuum wand kit, just remove the wand from its support and the suction motor connected to it will start working.

WARNING: only use the vacuum wand kit when the bag filter is inserted. See "ASSEMBLING THE VACUUM WAND FILTER BAG" on page 37.

WARNING: never vacuum the following substances: explosive or flammable gases, liquids and reactive powders; reactive metal powders (e.g. aluminium, magnesium, zinc) together with highly alkaline/acidic detergents; organic solutions (e.g. petrol, paint thinners, acetone or diesel oil).

WARNING: the vacuum wand kit is designed to remove solid substances. Do not attempt to remove anything that is burning or smouldering such as cigarettes, matches or hot cinders.

WARNING: if the machine is used in dangerous areas (e.g. petrol stations), the relative safety standards must be observed. It is forbidden to use the machine in environments with a potentially explosive atmosphere.

WARNING: when the vacuum wand is being used, do not bring the nozzle close to delicate organs like ears, mouth, eyes, etc.

WARNING: the vacuum wand kit is designed and built to be used by a qualified operator to clean (by removing solid dry waste) smooth, compact floors in conditions of verified safety.

SIDE BRUSH

The machine leaves the factory with the right-hand side brush only; the left-hand brush is an optional that can be requested. The side brushes are an essential tool when the areas to be cleaned feature shelves or other similar furniture.
The side brushes are able to extend beyond the total width of the machine, thus being able to clean flush with the wall and pass under shelves. In this way the entire room is cleaned in a single passage, and nothing is left behind.
if it is necessary to activate the side brushes during work in sweeping mode, turn the lever (1) on the steering column anticlockwise (**Fig.1**).

N.B.: the gearmotors in the side brush supports will start working simultaneously with the gearmotors in the brush head.

N.B.: If you wish to return the side brush supports to the idle position, turn the lever (1) clockwise.

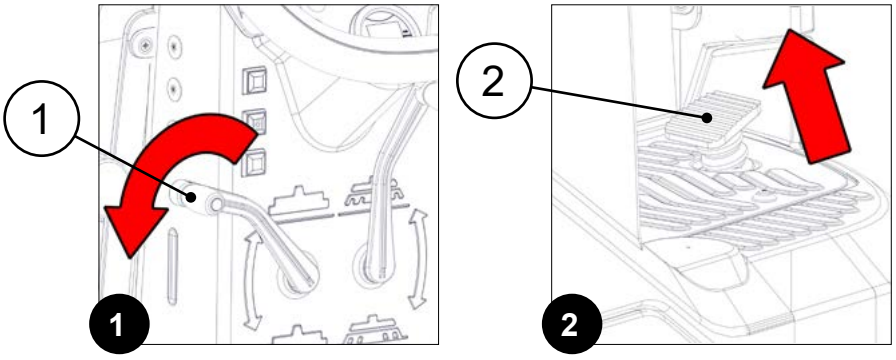

AT THE END OF THE WORK

At the end of the work, and before carrying out any type of maintenance, perform the following operations:

1. Set the machine to TRANSFER mode, see paragraph "TRANSFER WORKING MODE" on page 39.
2. Take the machine to the designated debris hopper emptying area.

WARNING: the place designated for this operation must comply with current regulations concerning safety at work and current environmental protection regulations.

CAUTION: it is recommended to wear the appropriate PPE (Personal Protective Equipment), suitable for the work to be carried out.

3. Follow the debris hopper emptying phases.
4. Carry out all the daily maintenance procedures on the machine. See "MAINTENANCE PLAN" on page 52.
5. Once the daily maintenance operations are complete, take the machine to the designated storage location.

ATTENTION: Park the machine in an enclosed place, on a flat surface; near the machine there must be no objects that could either damage it, or be damaged through contact with it.

6. Secure the machine, see "MACHINE SAFETY" on page 29.

MAINTENANCE PLAN

The importance of machine maintenance should not be underestimated.
By ensuring the machine is inspected regularly, we can replace all parts that become worn in a timely manner.
In addition, we can also recognise faults quickly, thus increasing the useful life of our machine.

N.B.: through its network of certified service centres, FIMAP proposes special offers on maintenance services, like those available in car repair shops. See https://www.fimap.com/it/fimap/22/maintenance-and-repair.html

First, it is important to understand the difference between the various types of maintenance:

- routine maintenance is an activity designed to keep the machine in good working order.
- extraordinary maintenance regards work carried out to implement substantial updates on the machine.

N.B.: the primary purpose of routine maintenance is to maintain the performance of the machine's various functions, checking for any worn or faulty elements. A fault that is not fixed or an excessively worn part could cause damage to the machine or injure persons in the vicinity.

N.B.: The main purpose of extraordinary maintenance is to replace any worn or defective elements.

N.B.: In addition, maintenance enables the operator to use the machine in a safer manner, in the knowledge that the risk of unforeseen events has been reduced as far as possible.

N.B.: The use and maintenance manual contains all the procedures to be carried out during routine maintenance of the machine. By following these instructions, even individuals with no particular expertise in this area can check the machine and replace any parts necessary, taking a DIY approach. However, it is essential to remember the importance of entrusting the work to genuine professionals. An experienced specialist may notice details that could escape the notice of a less observant and expert eye.

N.B.: A dilemma may arise during maintenance: which spare parts are best?
FIMAP supplies original spare parts which are exactly identical to the parts on a given machine that need replacing; these are the best choice because they are durable and long-lasting, and help to maintain the performance of the machine.

N.B.: FIMAP service centres use these spare parts; in an unauthorised workshop, however, we recommend explicitly asking the technicians to use only these genuine FIMAP products. Using official spare parts extends the longevity of your machine.

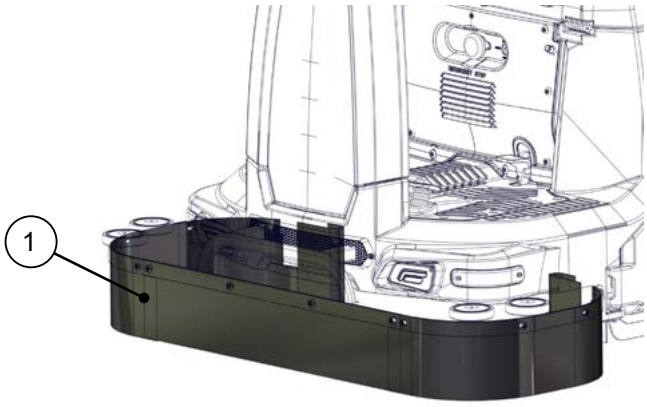

1 Front dust guard kit (optional)

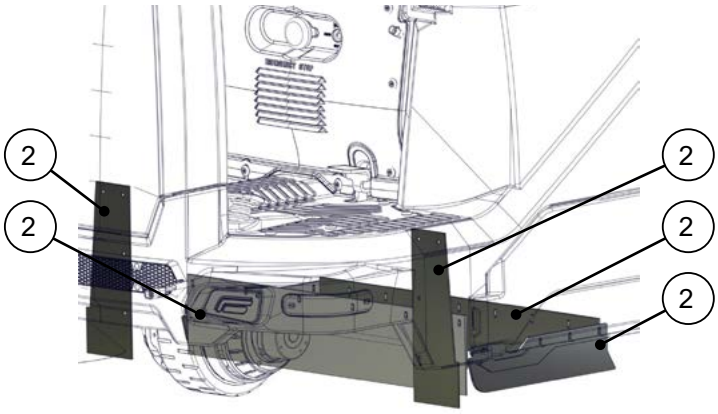

2 Dust guard rubber blades for the central brush

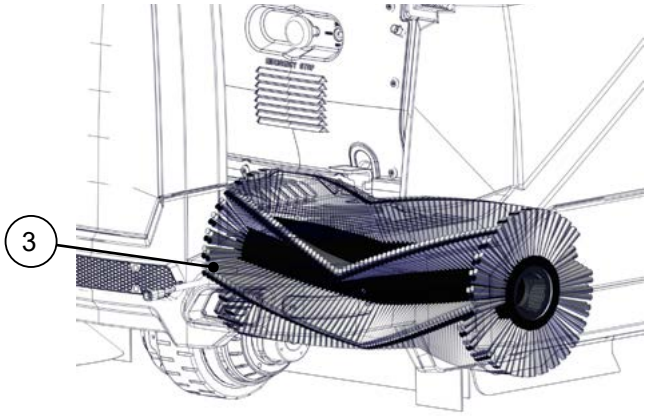

3 Central brush

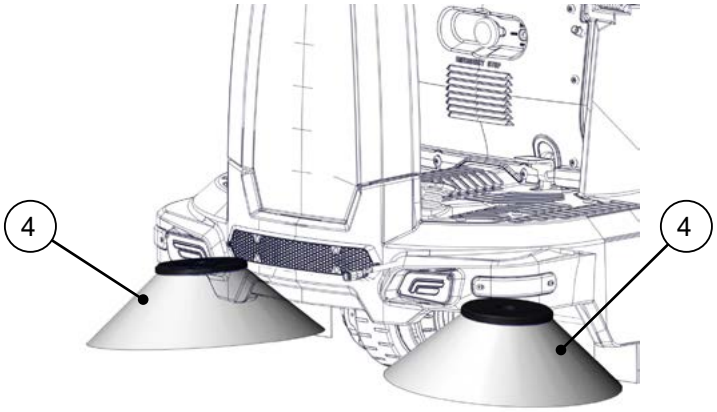

4 Side brushes

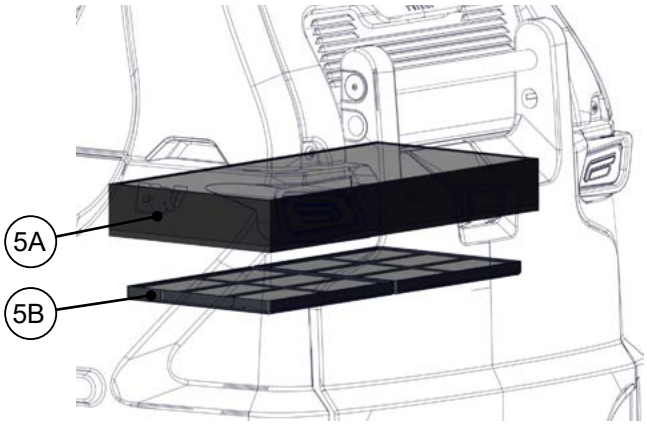

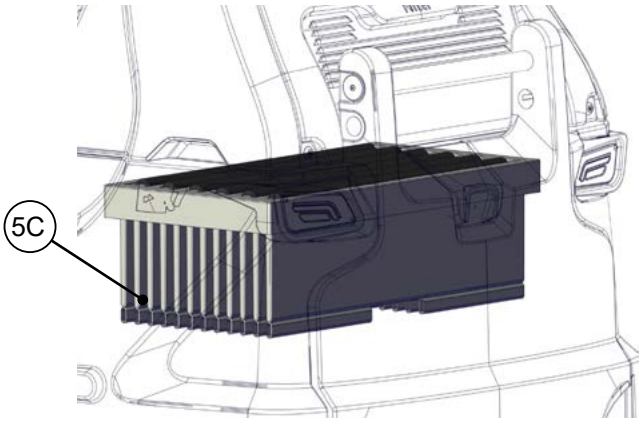

5A Panel filter

5B Filter for carpet floors

5C Pocket filter

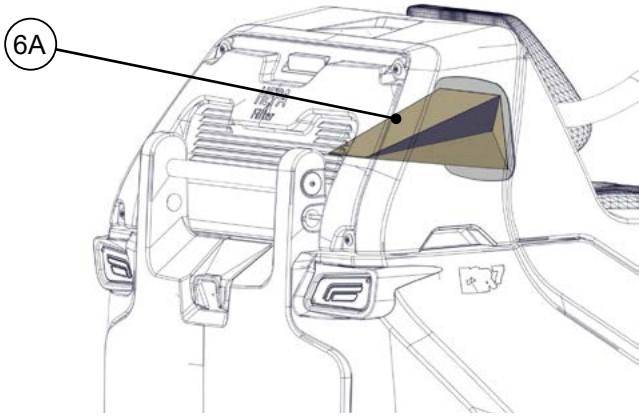

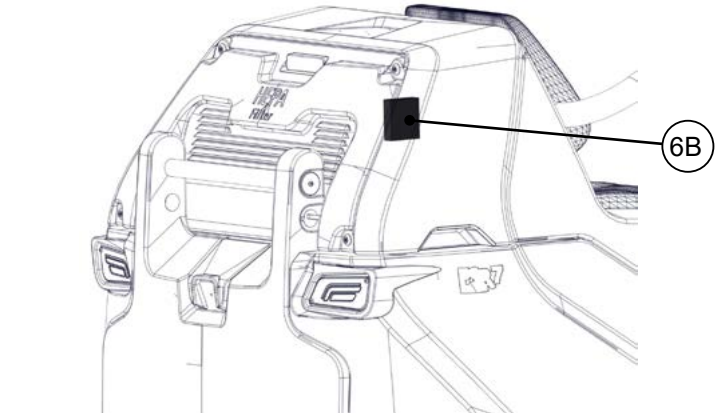

6A Filter bag of the vacuum wand kit (optional)

6B Inlet air filter of the vacuum wand kit (optional)

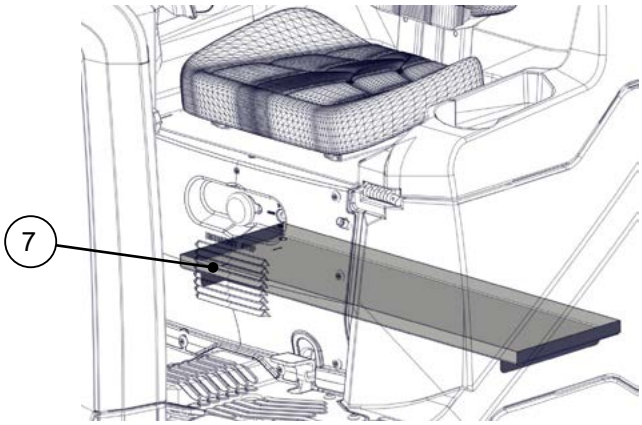

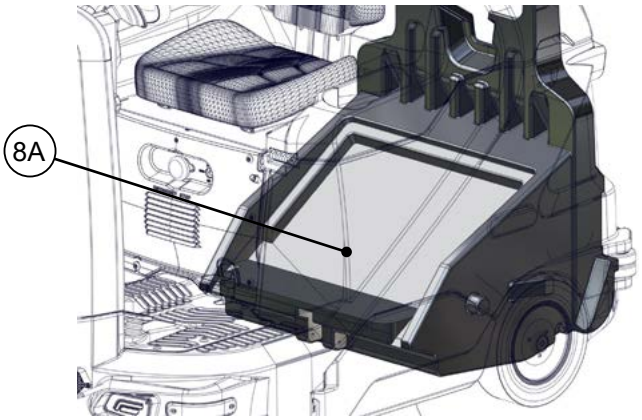

7 Battery base

8A Hopper

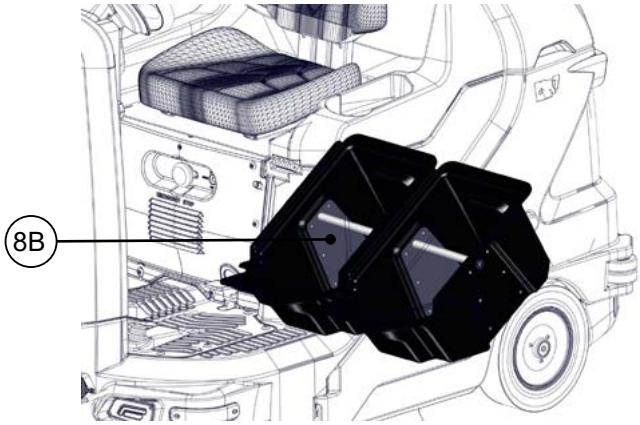

8B Debris hopper bins (optional)

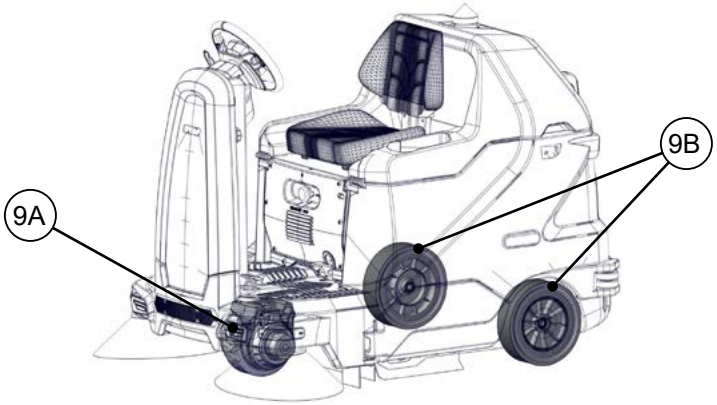

9A Front driving wheel

9B Rear wheels

Frequency	Person resp.	Ref.	Description	Calculation	Notes	Page.
At the end of the work	General worker	1	Front dust guard kit (optional)	Clean the surface of the rubber blades		page 58
		2	Dust guard rubber blades for the central brush assembly	Clean the surface of the rubber blades		page 58
		3	Central brush	Clean the central brush, removing any waste		page 60
		4	Side brush	Clean the central brush, removing any waste		page 60
		5	Panel vacuum filter	To clean the panel filter, follow the instructions provided by the manufacturer	Carefully shake it on a clean, flat surface. Clean with compressed air (≤ 7atm), pointed in the opposite direction to the vacuum flow	page 61
			Pocket vacuum filter	To clean the pocket filter, follow the instructions provided by the manufacturer	Clean the pocket filter with a vacuum cleaner, using compressed air (≤ 7atm) pointed in the opposite direction to the vacuum flow	page 62
		6	Filter bag of the vacuum wand kit	To clean the filter bag, follow the instructions provided by the manufacturer	Empty the filter bag. Clean with compressed air (≤ 7atm) pointed in the opposite direction to the vacuum flow	page 62
Every 50 work hours	General worker	1	Front dust guard kit (optional)	Check for wear and possible faults	If necessary, contact your FIMAP service centre of reference or the one closest to you	
	Specialised operator			Check the adjustment in relation to the floor		
	General worker	2	Dust guard rubber blades for the central brush assembly	Check for wear and possible faults	If necessary, contact your FIMAP service centre of reference or the one closest to you	
	Specialised operator			Check the adjustment in relation to the floor		
	General worker	3	Central brush	Check for wear and possible faults	If necessary, contact your FIMAP service centre of reference or the one closest to you	
		4	Side brush	Check for wear and possible faults	If necessary, contact your FIMAP service centre of reference or the one closest to you	
	Specialised operator	5	Panel vacuum filter	Check for wear and possible faults	If necessary, contact your FIMAP service centre of reference or the one closest to you	
			Pocket vacuum filter	Check for wear and possible faults	If necessary, contact your FIMAP service centre of reference or the one closest to you	
	General worker	6	Filter bag of the vacuum wand kit	Replace the filter bag		page 37
			Inlet air filter of the vacuum wand kit	Clean the suction motor intake air filter of the vacuum wand kit		page 63
	Specialised operator			Check for wear and possible faults	If necessary, contact your FIMAP service centre of reference or the one closest to you	
	General worker	7	Battery compartment	Check for leakages from the batteries, and bleed them if necessary		

Frequency	Person resp.	Ref.	Description	Calculation	Notes	Page.
Every 100 work hours	General worker	6	Filter bag of the vacuum wand kit	Replace the filter bag		page 37
			Inlet air filter of the vacuum wand kit	Clean the suction motor intake air filter of the vacuum wand kit		page 63
	Specialised operator			Check for wear and possible faults	If necessary, contact your FIMAP service centre of reference or the one closest to you	
	General worker	5	Vacuum filter	Check for wear and possible faults in the gaskets	If necessary, contact your FIMAP service centre of reference or the one closest to you	
		6	Vacuum wand kit			
		8	Hopper compartment			
				Check for wear and possible faults in the debris hopper		
				Check for wear and possible faults in the removable bins (optional)		
Every 500 work hours	General worker	9	Rear wheels	Check for wear and possible faults in the rear wheels of the machine	If necessary, contact your FIMAP service centre of reference or the one closest to you	NA
			Driving wheel	Check for wear and possible faults in the driving wheel of the machine		NA

N.B.: "general worker" means someone able to handle tasks for which physical effort is required to carry out specific but simple job-related procedures, or responsible for tasks or services calling for aptitude or for knowledge that can be acquired in a few days.

N.B.: "specialised operator" means someone able to handle specific tasks requiring special practical skills obtained via technical-practical preparation organised by FIMAP service centre technicians.

ROUTINE MAINTENANCE

Before carrying out any routine maintenance operations, proceed as follows:

1. Take the machine to the maintenance area.

WARNING: the place designated for this operation must comply with current regulations concerning safety at work and current environmental protection regulations.

2. Make sure the machine is in a safe condition, see "MACHINE SAFETY" on page 29).

CAUTION: it is recommended to wear the appropriate PPE (Personal Protective Equipment), suitable for the work to be carried out.

CLEANING THE RUBBER BLADES OF THE FRONT DUST GUARD KIT (OPTIONAL)

To clean the rubber blades in the front dust guard kit, proceed as follows:

1. Go to the front of the machine.
2. Use a damp cloth to clean the side rubber blades (1) of the dust guard kit (**Fig.1**).
3. Use a damp cloth to clean the central rubber blade (2) of the dust guard kit (**Fig.2**).

N.B.: when cleaning the rubber blades, check their condition and state of wear. If they are unfit to be used, contact your FIMAP service centre of reference or the one closest to you.

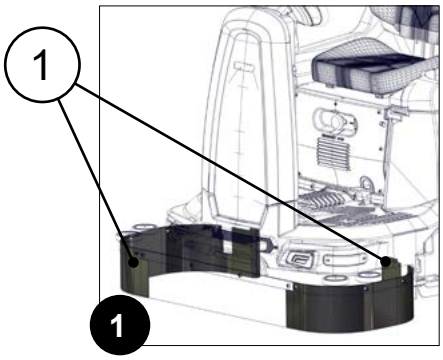

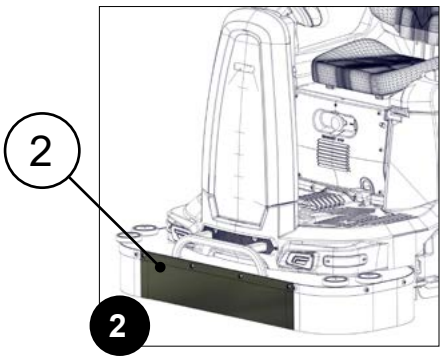

CLEANING THE RUBBER BLADES OF THE CENTRAL BRUSH DUST GUARD

To clean the rubber blades in the central brush front dust guard kit, proceed as follows:

1. Go to the left-hand side of the machine.
2. Open the left inspection door (1) (**Fig.1**).
3. Use a damp cloth to clean the left-hand bulkhead (2) in the machine frame (**Fig.2**).
4. Use a damp cloth to clean the front flap (3) in the machine frame (**Fig.3**).

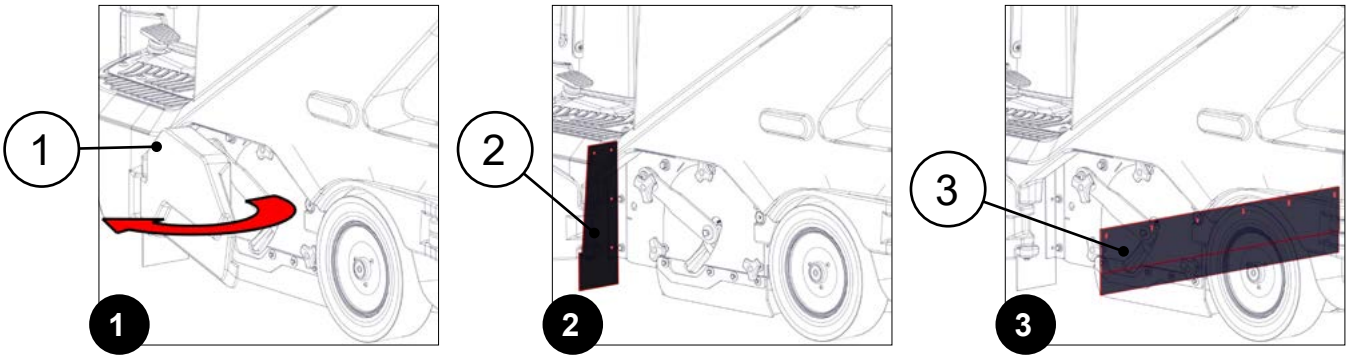

5. Use a damp cloth to clean the left-hand dust guard rubber blade (4) in the brush inspection carter (**Fig.4**).

N.B.: when cleaning the rubber blades, check their condition and state of wear. If they are unfit to be used, contact your FIMAP service centre of reference or the one closest to you.

6. After completing the work, close the left inspection door (1).
7. Go to the right-hand side of the machine.
8. Open the right inspection door (5) (**Fig.5**).
9. Use a damp cloth to clean the right-hand bulkhead (6) in the machine frame (**Fig.6**).

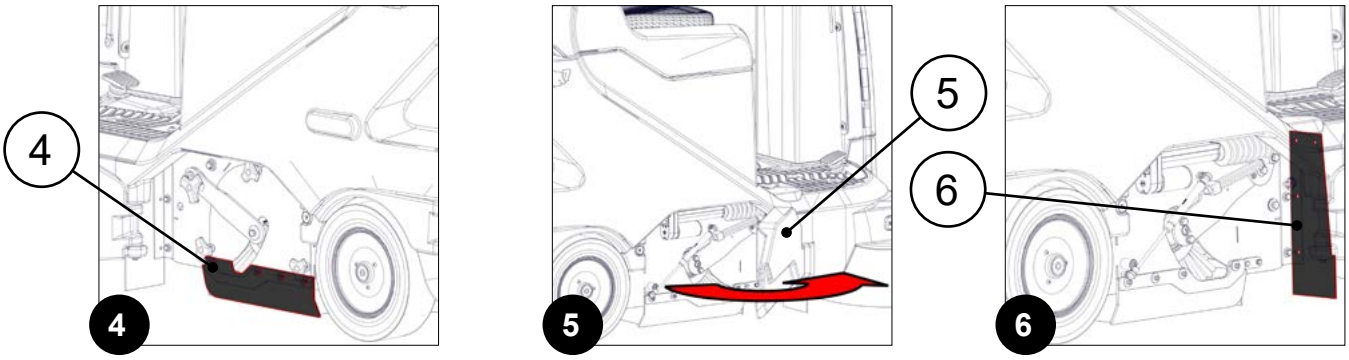

10. Use a damp cloth to clean the rear rubber blade (7) in the machine frame (**Fig.7**).
11. Use a damp cloth to clean the right-hand dust guard rubber blade (8) in the machine frame (**Fig.8**).
12. After completing the work, close the right inspection door (5).

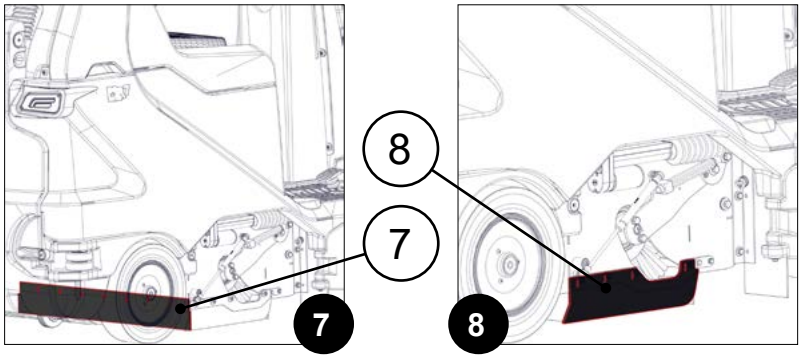

N.B.: when cleaning the rubber blades, check their condition and state of wear. If they are unfit to be used, contact your FIMAP service centre of reference or the one closest to you.

CLEANING THE CENTRAL BRUSH

A thoroughly clean central brush will ensure a cleaner floor, thereby reducing costs and increasing environmental sustainability. To clean the central brush, proceed as follows:

1. Open the left inspection door (1) (**Fig.1**).
2. Loosen the knobs (2) of the central brush inspection carter (**Fig.2**).
3. Loosen the knob (3) of the central brush lifting arm (**Fig.3**).

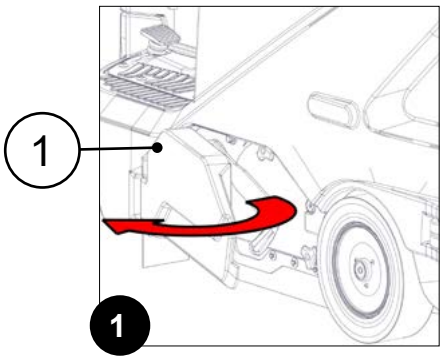

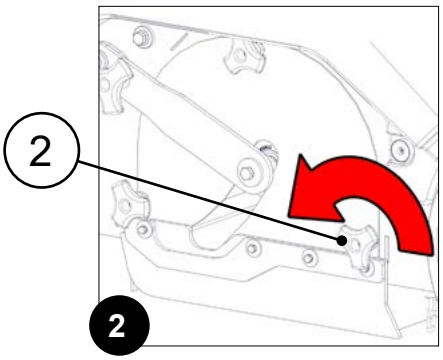

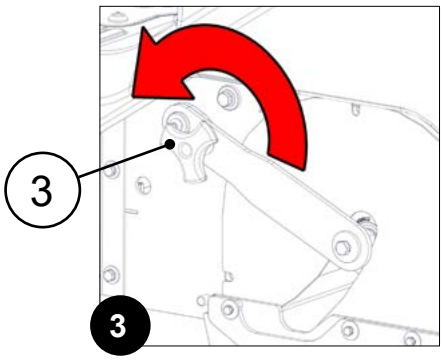

4. Remove the central brush inspection carter (4) (**Fig.4**).
5. Take the brush out of the tunnel in the machine frame (**Fig.5**).
6. Clean the brush under a stream of running water to remove any impurities from its bristles.

N.B.: check the wear of the bristles and replace the brush if they are excessively worn (the bristle length must not be less than 15 mm; this measurement is indicated on the brush by the yellow band). See "CENTRAL BRUSH REPLACEMENT" on page 65.

7. After cleaning, repeat the operations in reverse order to reassemble all the parts.

N.B.: when the brush is mounted correctly, the cusps on the brush form an arrow ^ when seen from above in the forward movement direction (**Fig.6**).

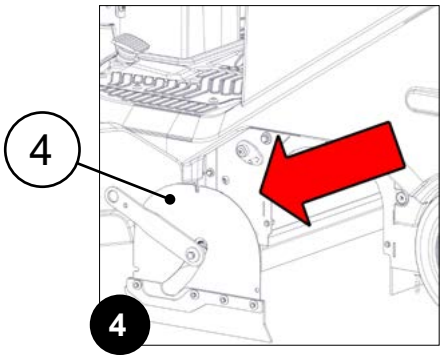

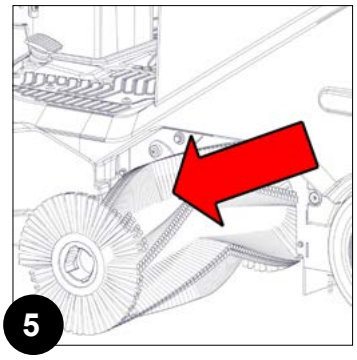

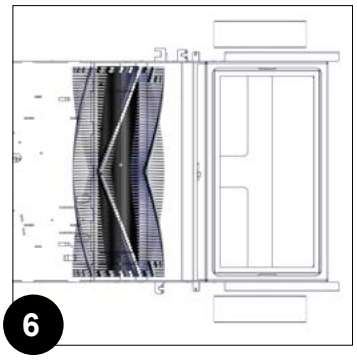

CLEANING THE SIDE BRUSHES

Thoroughly clean side brushes will ensure a cleaner floor, thereby reducing costs and increasing environmental sustainability. To clean the side brushes, proceed as follows:

1. Go to the right-hand side of the machine.
2. Remove the knob (1) fixing the side brush to the gear motor by rotating the right brush clockwise and the left brush anti-clockwise (**Fig.1**)..
3. Remove the washer (2) holding the side brush in place (**Fig.1**).
4. Remove the brush from its support (**Fig.3**).

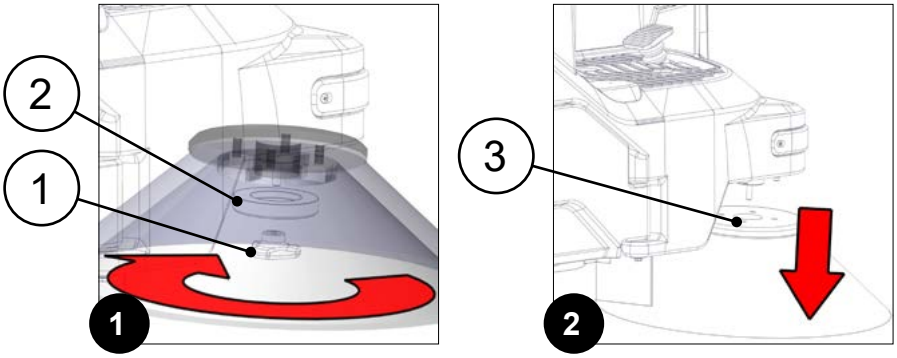

5. Clean the brush under a stream of running water to remove any impurities from its bristles.

N.B.: check the wear of the bristles and replace the brush if they are excessively worn. See "ASSEMBLING THE SIDE BRUSHES" on page 66.

6. After cleaning, repeat the operations in reverse order to reassemble all the parts.
7. Once this brush has been fitted, move on to the left-hand one (if used).

CLEANING THE PANEL FILTER

A thoroughly clean panel filter will ensure better machine vacuum system results, thereby reducing costs and increasing environmental sustainability. To clean the panel filter, proceed as follows:

1. Go to the side of the machine.
2. Grip the handle (1) and turn the upper body (2) to its maintenance position (**Fig.1**).
3. Stand at the back of the machine.
4. Grip the handles (3) and turn the vacuum fan support plate (4) to its maintenance position (**Fig.2**).
5. Take the panel filter (5) out of the machine (**Fig.3**).

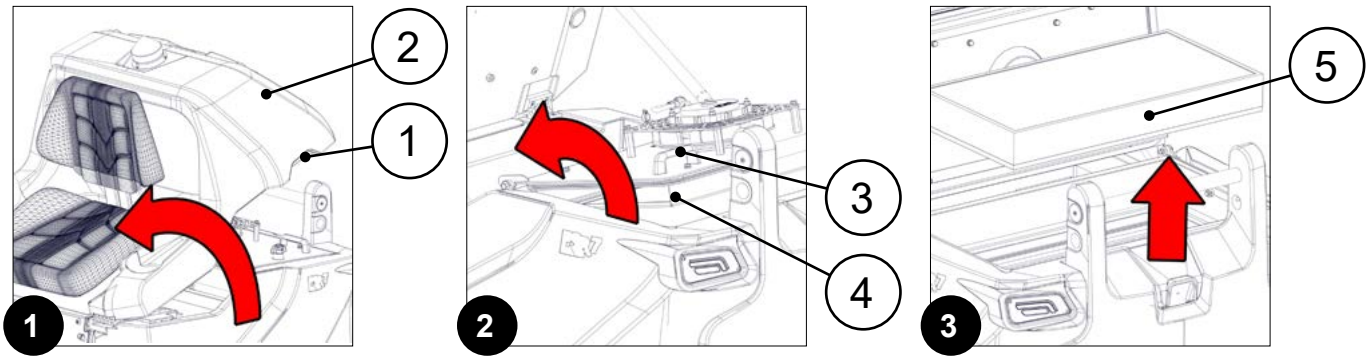

6. Clean the panel filter, carefully shaking it on a clean, flat surface. If necessary, clean with compressed air (≤ 7atm), pointed in the opposite direction to the vacuum flow.
7. Repeat the operations in reverse order to refit the panel filter in the machine.

N.B.: pay attention to the working direction of the panel filter when inserting it in the vacuum compartment on the machine: the gasket in the filter must be in contact with the machine frame.

CLEANING THE POCKET FILTER (OPTIONAL)

A thoroughly clean pocket filter will ensure better machine vacuum system results, thereby reducing costs and increasing environmental sustainability. To clean the pocket filter, proceed as follows:

1. Go to the side of the machine.
2. Grip the handle (1) and turn the upper body (2) to its maintenance position (**Fig.1**).
3. Stand at the back of the machine.
4. Grip the handles (3) and turn the vacuum fan support plate (4) to its maintenance position (**Fig.2**).
5. Take the pocket filter (5) out of the machine (**Fig.3**).

ATTENTION: remember to disconnect the filter shaker power supply connector before removing the filter from the machine.

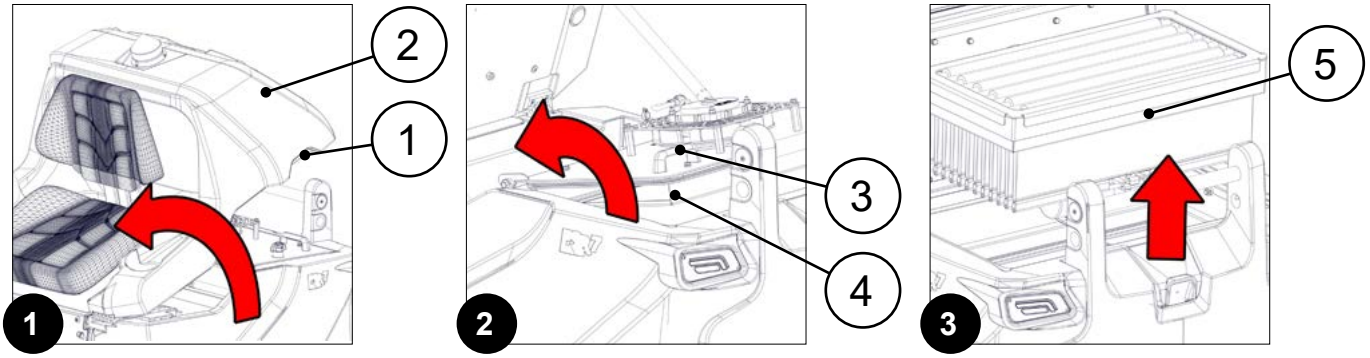

6. Clean the pocket filter, using a vacuum cleaner on the filtering surface (the air flow must be in the opposite direction to the vacuum flow).
7. Repeat the operations in reverse order to refit the pocket filter in the machine.

N.B.: remember to reconnect the filter shaker power supply connector before closing the vacuum fan support plate (4).

CLEANING THE FILTER BAG OF THE INTEGRATED VACUUM CLEANER KIT (OPTIONAL)

A thoroughly clean filter bag will ensure better results from the vacuum system of the integrated vacuum cleaner kit, thereby reducing costs and increasing environmental sustainability. To clean the filter bag, proceed as follows:

1. Go to the left-hand side of the machine.
2. Shift the driving seat forwards (1) (**Fig.1**) after activating the adjustment lever in the lower left-hand part of the seat.
3. Go to the right-hand side of the machine.
4. Remove the vacuum tube (2) from the vacuum nozzle (3) on the filter bag compartment cover (4) (**Fig.2**).
5. Rotate the knobs (5) on the filter bag compartment cover (4) to the maintenance position (**Fig.3**).

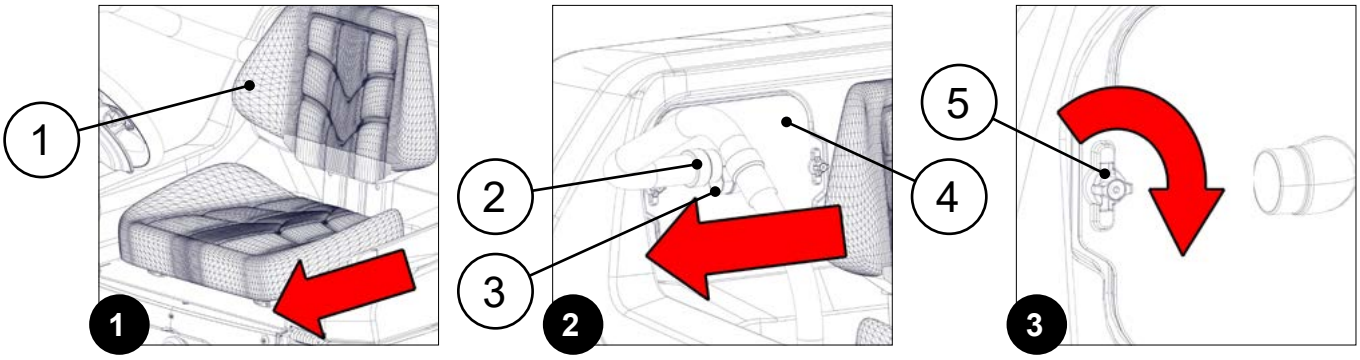

6. Remove the filter bag compartment cover (4) (**Fig.4**).
7. Remove the filter bag (6) from its cardboard filter support, taking care not to damage the support (**Fig.5**).

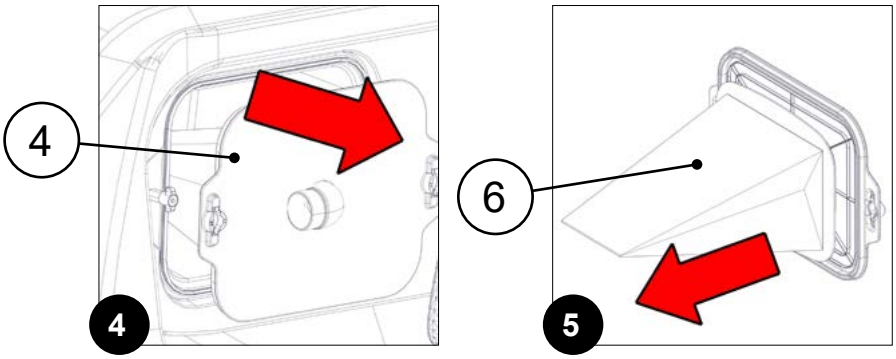

8. Empty the filter bag.

N.B.: the place designated for this operation must comply with current regulations concerning safety at work and current environmental protection regulations.

9. Clean the inside of the filter bag with a jet of compressed air (≤ 7atm) pointed in the opposite direction to the vacuum flow.
10. Repeat the operations in reverse order to refit the filter bag in the machine.

CLEANING THE INLET AIR FILTER OF THE INTEGRATED VACUUM CLEANER KIT (OPTIONAL)

A thoroughly clean intake air filter will ensure better results from the vacuum system of the integrated vacuum cleaner kit, thereby reducing costs and increasing environmental sustainability. To clean the intake air filter, proceed as follows:

1. Go to the left-hand side of the machine.
2. Shift the driving seat forwards (1) (**Fig.1**) after activating the adjustment lever in the lower left-hand part of the seat.
3. Go to the right-hand side of the machine.
4. Remove the vacuum tube (2) from the vacuum nozzle (3) on the filter bag compartment cover (4) (**Fig.2**).
5. Rotate the knobs (5) on the filter bag compartment cover (4) to the maintenance position (**Fig.3**).

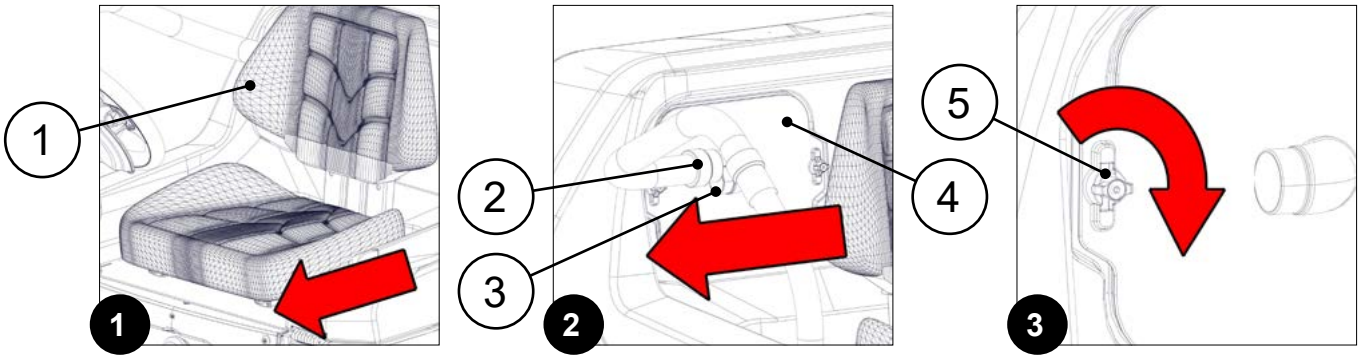

6. Remove the filter bag compartment cover (4) (**Fig.4**).
7. Remove the intake air filter (6) from its support (7) in the machine (**Fig.5**).

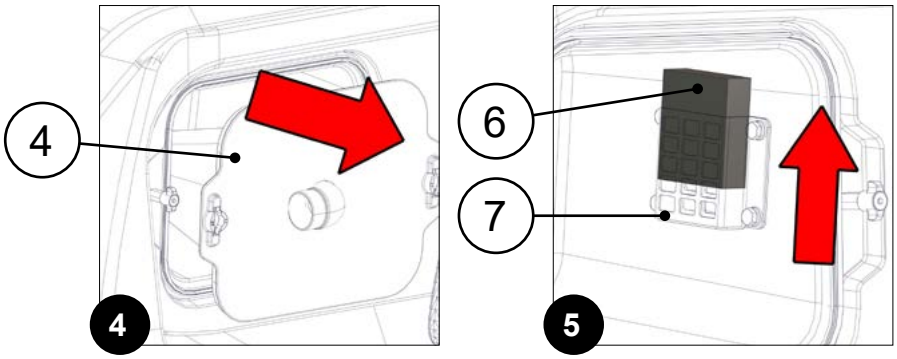

8. Clean the filter with a jet of compressed air (≤ 7atm) pointed in the opposite direction to the vacuum flow.
9. Repeat the operations in reverse order to refit the panel filter in the machine.

EXTRAORDINARY MAINTENANCE WORK

Before carrying out any extraordinary maintenance operations, proceed as follows:

1. Take the machine to the maintenance area.

WARNING: the place designated for this operation must comply with current regulations concerning safety at work and current environmental protection regulations.

2. Make sure the machine is in a safe condition, see “MACHINE SAFETY” on page 29).

CAUTION: it is recommended to wear the appropriate PPE (Personal Protective Equipment), suitable for the work to be carried out.

CENTRAL BRUSH REPLACEMENT

The good condition of the central brush will ensure a cleaner floor, thereby reducing costs and increasing environmental sustainability. To replace the central brush, proceed as follows:

1. Open the left inspection door (1) (**Fig.1**).
2. Loosen the knobs (2) of the central brush inspection carter (**Fig.2**).
3. Loosen the knob (3) of the central brush lifting arm (**Fig.3**).

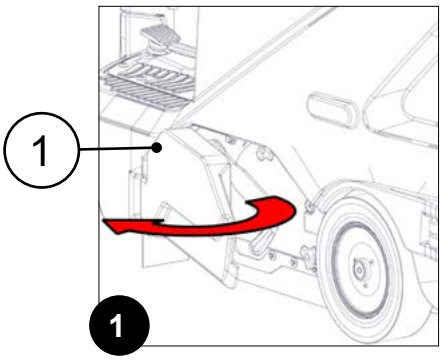

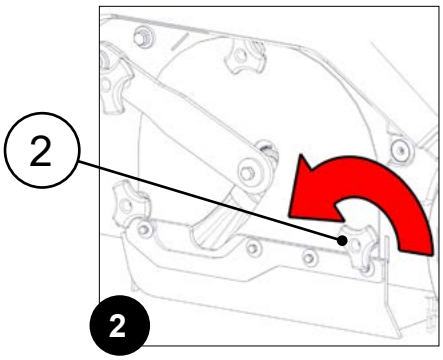

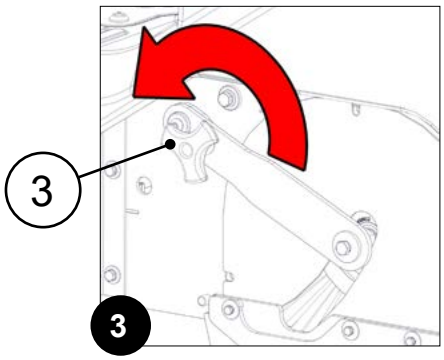

4. Remove the central brush inspection carter (4) (**Fig.4**).
5. Take the brush out of the tunnel in the machine frame (**Fig.5**).
6. Replace the worn brush with a new one.

N.B.: when the brush is mounted correctly, the cusps on the brush form an arrow ^ when seen from above in the forward movement direction (**Fig.6**).

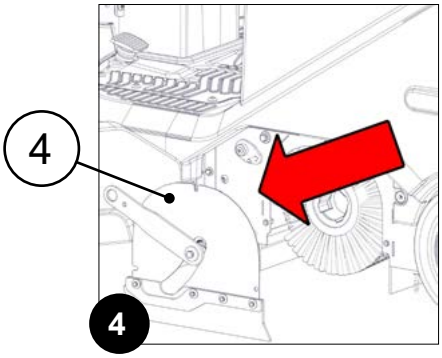

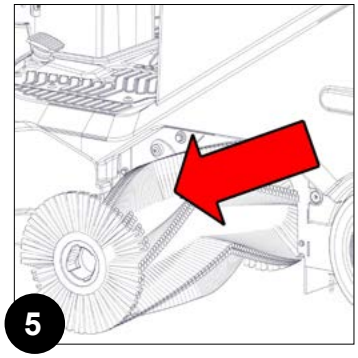

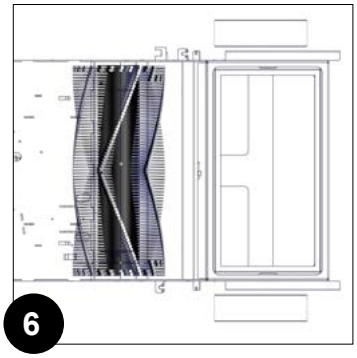

7. Rotate the brush until the fastening hooks (5) in the driving towing hook (6) (**Fig. 7**) correctly enter the slots (7) in the brush (**Fig.8**).
8. Insert the central brush inspection carter (4) (**Fig.9**).

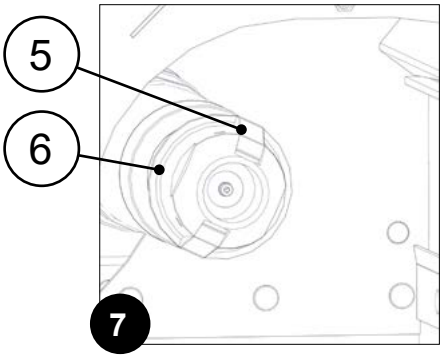

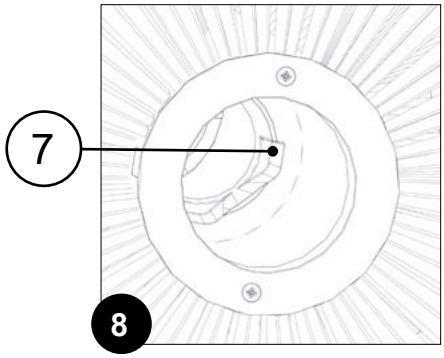

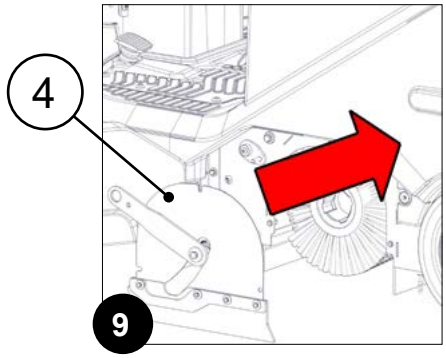

ATTENTION: make sure the fastening hooks (8) in the idle towing hook (9) (**Fig. 10**) correctly enter the slots (10) in the brush (**Fig.11**).

9. Tighten the knob (3) of the central brush lifting arm (**Fig.12**).

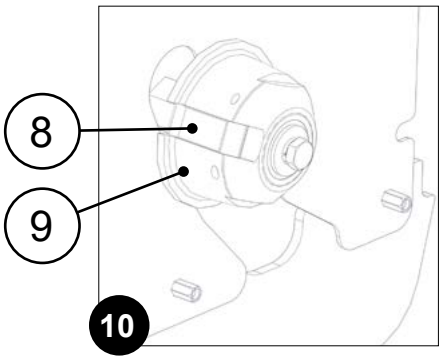

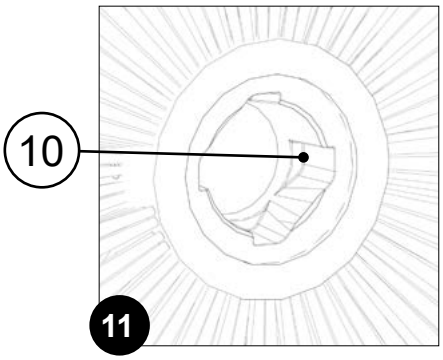

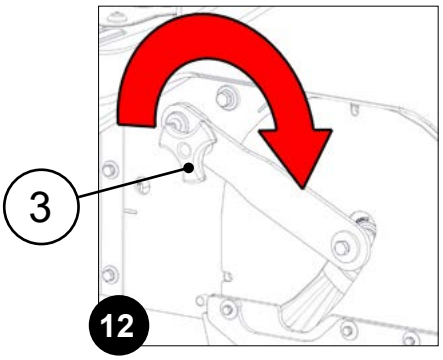

10. Tighten the knobs (2) of the central brush inspection carter (**Fig.13**).
11. Close the left-hand inspection door (1) (**Fig.14**).

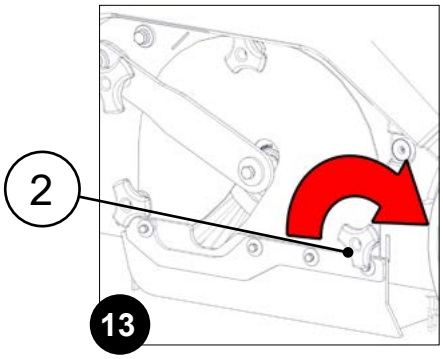

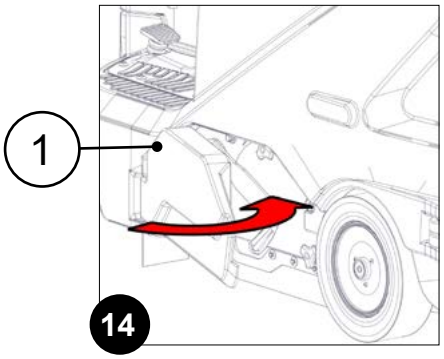

ASSEMBLING THE SIDE BRUSHES

The good condition of the side brush will ensure a cleaner floor, thereby reducing costs and increasing environmental sustainability. To replace the side brush, do the following:

1. Go to the right-hand side of the machine.
2. Remove the knob (1) fixing the side brush to the gear motor by rotating the right brush clockwise and the left brush anti-clockwise (**Fig.1**)..
3. Remove the washer (2) holding the side brush in place (**Fig.2**).
4. Replace the worn brush with a new one.
5. Insert the side brush, making sure to correctly position the pins (3), present in the brush support, in the holes (4), present in the brush (**Fig.3**).

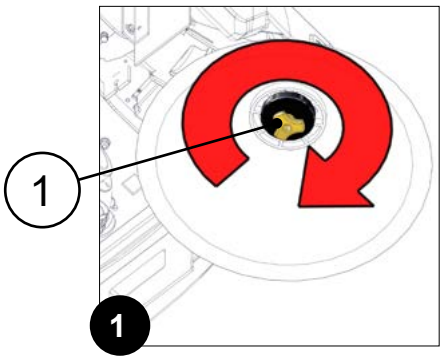

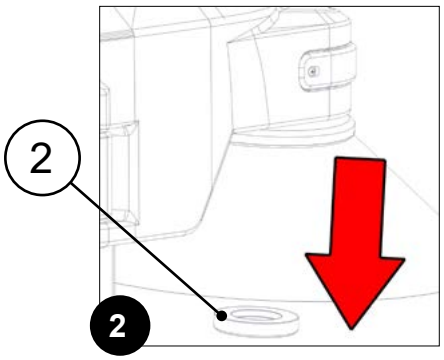

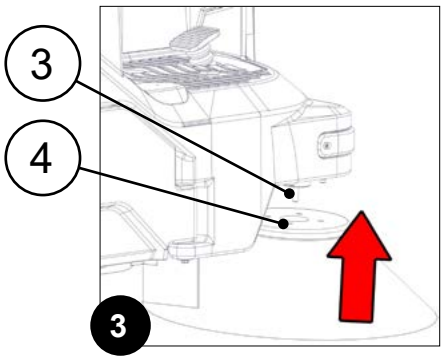

6. Fix the brush to the flange using the knob (1), remembering to put the washer (2) in between the knob and the brush.
7. Once this brush has been fitted, move on to the left-hand one (if used).

DISPOSAL

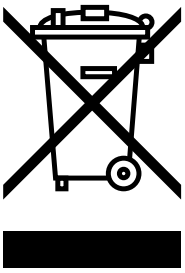

Fimap is committed to creating its products by respecting the environment, investing in the development of sustainable solutions and technologies, seeking materials that can easily be recycled, and ensuring that the entire production process has a low environmental impact.

At the end of the machine's life cycle, FIMAP offers a RECYCLING MANUAL, in order to provide some simple information on how to dispose of the materials that make up your scrubbing machine. See https://www.fimap.com/it/fimap/sostenibilita/75/riciclabilita.html
Before proceeding with disposal, it is essential to contact your nearest authorised collection centres directly, in accordance with the legislation in force in the country where the machine is used.

CHOOSING AND USING BRUSHES

All the brushes are comprised of a body to which the various tufts of bristles are fixed. The brush bodies are generally made of plastic, as this is a material that ensures higher levels of reliability, in that it does not become damaged when wet.

N.B.: when the bristle starts to be consumed, it comes closer to the brush and increases its rigidity, losing its flexibility characteristics that allows it to collect and remove dirt. For this reason it is important to replace them at the right moment.

The type of brush for sweeping machines can be chosen according to the material the bristles are made of. The most common bristle materials are:

POLYPROPYLENE (PPL)	NYLON (PA)	TYNEX
Synthetic polymer	Synthetic polymer	Very durable abrasive material
Bristles with varying level of abrasion and thickness (0.3÷1.5 mm)	Can be used as an alternative to PPL	Can be used for deep cleaning on industrial surfaces
Can be used on any type of flooring		
Can be used for routine or deep cleaning		

UNION MIX	STEEL
Compound based on natural products	Suitable for industrial floors with stubborn dirt
Can be used for polishing and scrubbing activities	Alternative to Tynex
Resistant to very high temperatures	
Subject to rapid wear, shorter life than the PPL version	
Must be used with non-aggressive detergents	
Suitable for flooring types such as: marble; granite; porphyry cobbles; terracotta	
Not suitable for cleaning heavy soiling	

Legend: $Ø_E$= external bristle diameter; $Ø_F$= external tank diameter (brush body); L_E= maximum brush width (bristle reference); L_F= maximum brush width (tank reference);

TYPE OF CYLINDRICAL BRUSH

CODE	QTY	Ø EXTER-NAL	TYPE OF BRISTLE	Ø BRISTLES	NOTES
456783	1	300	PPL	0.7 WAVY 1.1 KNURLED	CYLINDRICAL BRUSH $Ø_E$ 300mm $Ø_F$ 135mm L_E 680mm L_F 685mm (COLOUR: WHITE / BLACK)
456984	1	300	PPL + STEEL	0.7 WAVY 0,5	CYLINDRICAL BRUSH $Ø_E$ 300mm $Ø_F$ 135mm L_E 680mm L_F 685mm (COLOUR: WHITE + STEEL FILAMENTS)
456985	1	300	PPL	0.3 WAVY 0.7 KNURLED	CYLINDRICAL BRUSH $Ø_E$ 300mm $Ø_F$ 135mm L_E 680mm L_F 685mm (COLOUR: LIGHT BLUE / WHITE)
457570	1	300	TAMPICO		CYLINDRICAL BRUSH $Ø_E$ 300mm $Ø_F$ 135mm L_E 680mm L_F 685mm

Cylindrical brush

Discoidal side brush

TYPE OF DISCOIDAL SIDE BRUSH

CODE	QTY	Ø EXTER-NAL	TYPE OF BRISTLE	Ø BRIS-TLES	NOTES
429205	1+1	460	PPL + STEEL	1,1 + 0,7	DISCOIDAL BRUSH $Ø_E$ 460mm $Ø_F$ 180mm (COLOUR: BLACK + STEEL FILAMENTS)
429206	1+1	460	PPL	1	DISCOIDAL BRUSH $Ø_E$ 460mm $Ø_F$ 180mm (COLOUR: BLACK)
457571	1+1	460	TAMPICO + BRONZE		DISCOIDAL BRUSH $Ø_E$ 460mm $Ø_F$ 180mm
457641	1+1	460	PPL	0,7	DISCOIDAL BRUSH $Ø_E$ 460mm $Ø_F$ 180mm (COLOUR: BLACK)

TROUBLESHOOTING

This chapter lists the most common problems linked with the use of the machine. If you are unable to resolve the problems with the information given here, please contact your FIMAP service centre of reference, or that which is closest to you

THE MACHINE DOES NOT START

POSSIBLE CAUSE	SOLUTION
The main switch is set to “0”	Make sure the main switch is on "I" (if necessary, make a quarter turn clockwise with the key)
Check there are no alarm messages on the control display at the time of switch-on	Contact your FIMAP service centre of reference, or that which is closest to you
Make sure the battery box is correctly connected, and that the battery box connector is connected to the electrical system connector	Make sure the batteries are properly connected to one another, contact your FIMAP service centre of reference, or that which is closest to you
	Make sure the batteries are properly connected to the machine's electrical system, contact your FIMAP service centre of reference, or that which is closest to you
Check the charge level of the battery box	If the battery box charge level is critical, run a complete charging cycle. See “RECHARGING THE BATTERIES” on page 32

THE BATTERY BOX IS NOT COMPLETELY CHARGED

POSSIBLE CAUSE	SOLUTION
The battery charger cable connector is not properly inserted in the battery box connector	Connect the battery charger cable connector to the battery box connector again
The plug on the battery charger power cable is not correctly inserted in the mains socket	Check the plug on the battery charger power cable is connected to the mains socket
The characteristics of the mains supply do not correspond to those required by the battery charger	Check the characteristics indicated on the battery charger plate are the same as those of the mains supply
The battery charger LEDs flash repeatedly	Referring to the battery charger use and maintenance manual, check the meaning of the flashing signals that the battery charger emits during the battery recharge phase
The electrolyte level in the battery box cells is low	To top it up, refer to the battery box user and maintenance manual supplied along with the battery box itself (or obtained by contacting the battery box supplier)

THE MACHINE HAS A VERY LOW WORK AUTONOMY

POSSIBLE CAUSE	SOLUTION
Check the battery box charge level (check the symbol on the control display)	If the battery charge level is critical, run a complete charging cycle. See “RECHARGING THE BATTERIES” on page 32

THE MACHINE DOES NOT MOVE

POSSIBLE CAUSE	SOLUTION
The machine does not start	See "THE MACHINE DOES NOT START" on page 69
There is a drive pedal fault	Contact your FIMAP service centre of reference, or that which is closest to you

THE MACHINE DOES NOT CLEAN CORRECTLY

POSSIBLE CAUSE	SOLUTION
The machine does not start	See "THE MACHINE DOES NOT START" on page 69
The central brush and/or side brushes are not correctly fitted on the machine	Check the central brush is correctly fitted in the machine. If necessary see "ASSEMBLING THE CENTRAL BRUSH" on page 35
	Check the side brushes are correctly fitted in the machine. If necessary see "ASSEMBLING THE SIDE BRUSHES" on page 66
The type of brush being used is not suitable for the dirt to be removed	Check that the brushes installed on the machine are adequate for the work to be carried out, contact your FIMAP service centre of reference, or that which is closest to you
The bristles of the central brush and/or the side brushes are excessively worn	Check the condition of the central brush, replacing it if necessary. See "CENTRAL BRUSH REPLACEMENT" on page 65
	Check the condition of the side brushes, replacing them if necessary. See "ASSEMBLING THE SIDE BRUSHES" on page 66
The debris hopper is too full	If the debris hopper is too full, empty it. See "EMPTYING THE DEBRIS HOPPER" on page 44

THE VACUUM SYSTEM DOES NOT VACUUM CORRECTLY

POSSIBLE CAUSE	SOLUTION
The vacuum system is obstructed	Clean the panel filter. See "CLEANING THE PANEL FILTER" on page 61
	Clean the pocket filter. See "CLEANING THE POCKET FILTER (OPTIONAL)" on page 62

THE MACHINE DOES NOT VACUUM CORRECTLY

POSSIBLE CAUSE	SOLUTION
The debris hopper is full	Empty the debris hopper. See "EMPTYING THE DEBRIS HOPPER" on page 44
The vacuum device is obstructed	See "THE VACUUM SYSTEM DOES NOT VACUUM CORRECTLY" on page 70

EXCESSIVE DUST PRODUCTION

POSSIBLE CAUSE	SOLUTION
The vacuum system is disabled	Check the hopper vacuum system is not switched off; if it is, switch it on via the button on the control display. See “VACUUM SYSTEM ACTIVATION/DEACTIVATION” on page 46
The vacuum filter is obstructed	Clean the panel filter. See “CLEANING THE PANEL FILTER” on page 61
	Clean the pocket filter. See “CLEANING THE POCKET FILTER (OPTIONAL)” on page 62
The debris hopper is too full	If the debris hopper is too full, empty it. See “EMPTYING THE DEBRIS HOPPER” on page 44
Dust seal flaps no longer in good condition	Contact your FIMAP service centre of reference, or that which is closest to you.

EC DECLARATION OF CONFORMITY

The undersigned manufacturer:

FIMAP S.p.A.
Via Invalidi del Lavoro, 1
37059 Santa Maria di Zevio (VR)

declares under its sole responsibility that the products

SWEEPING MACHINES

FSR7 BASE mod.

comply with the requirements of the following Directives:

- 2006/42/EC: Machinery Directive.
- 2014/30/EU: Electromagnetic compatibility directive.

The person authorized to compile the technical file:

Mr. Giancarlo Ruffo
Via Invalidi del Lavoro, 1
37059 Santa Maria di Zevio (VR) - ITALY

Santa Maria di Zevio (VR), 28/03/2022

FIMAP S.p.A.
Legal representative
Giancarlo Ruffo

The undersigned manufacturer:

FIMAP S.p.A.
Via Invalidi del Lavoro, 1
37059 Santa Maria di Zevio (VR)

declares under its sole responsibility that the products

SWEEPING MACHINES

FSR7 BASE CB mod.

comply with the requirements of the following Directives:

- 2006/42/EC: Machinery Directive.
- 2014/35/EU: Low Voltage Directive.
- 2014/30/EU: Electromagnetic compatibility directive.

The person authorized to compile the technical file:

Mr. Giancarlo Ruffo
Via Invalidi del Lavoro, 1
37059 Santa Maria di Zevio (VR) - ITALY

Santa Maria di Zevio (VR), 28/03/2022

FIMAP S.p.A.
Legal representative
Giancarlo Ruffo

The undersigned manufacturer:

FIMAP S.p.A.
Via Invalidi del Lavoro, 1
37059 Santa Maria di Zevio (VR)

declares under its sole responsibility that the products

SWEEPING MACHINES

FSR7 BASE mod.

comply with the requirements of the following Directives:

- 2006/42/EC: Machinery Directive.
- 2014/30/EU: Electromagnetic compatibility directive.
- 2000/14/EC: Directive by the European Parliament and Council date 8th May, 2000. Noise emission by machines and equipment for outdoor use.

Falling into the category of road sweeper as defined in Annex 46 of Directive 2000/14/EC of the European Parliament and the Council, is subject to noise marking only.
The conformity evaluation was carried out in accordance with enclosure III.B.46 of the said directive.

MODEL	LwA [dB(A)]	LwA guaranteed [dB(A)]
FSR7 BASE	85,8	85,8

The person authorized to compile the technical file:

Mr. Giancarlo Ruffo
Via Invalidi del Lavoro, 1
37059 Santa Maria di Zevio (VR) - ITALY

Santa Maria di Zevio (VR), 28/03/2022

FIMAP S.p.A.
Legal representative
Giancarlo Ruffo

UKCA DECLARATION OF CONFORMITY

The undersigned manufacturer:

FIMAP S.p.A.
Via Invalidi del Lavoro, 1
37059 Santa Maria di Zevio (VR)

declares under its sole responsibility that the products

SWEEPING MACHINES

FSR7 BASE mod.

comply with the requirements of the following Directives:

- S.I. 2008/1597 Supply of Machinery (Safety) Regulations 2008 (as amended).
- S.I. 2016:1091 Electromagnetic Compatibility Regulations 2016 (as amended).

The person authorized to compile the technical file:

Mr. Giancarlo Ruffo
Via Invalidi del Lavoro, 1
37059 Santa Maria di Zevio (VR) - ITALY

Santa Maria di Zevio (VR), 28/03/2022

FIMAP S.p.A.
Legal representative
Giancarlo Ruffo

The undersigned manufacturer:

FIMAP S.p.A.
Via Invalidi del Lavoro, 1
37059 Santa Maria di Zevio (VR)

declares under its sole responsibility that the products

SWEEPING MACHINES

FSR7 BASE CB mod.

comply with the requirements of the following Directives:

- S.I. 2008/1597 Supply of Machinery (Safety) Regulations 2008 (as amended).
- S.I. 2016:1101 Electrical Equipment (Safety) Regulations 2016 (as amended).
- S.I. 2016:1091 Electromagnetic Compatibility Regulations 2016 (as amended).

The person authorized to compile the technical file:

Mr. Giancarlo Ruffo
Via Invalidi del Lavoro, 1
37059 Santa Maria di Zevio (VR) - ITALY

Santa Maria di Zevio (VR), 28/03/2022

FIMAP S.p.A.
Legal representative
Giancarlo Ruffo

The undersigned manufacturer:

FIMAP S.p.A.
Via Invalidi del Lavoro, 1
37059 Santa Maria di Zevio (VR)

declares under its sole responsibility that the products

SWEEPING MACHINES

FSR7 BASE mod.

comply with the requirements of the following Directives:

- S.I. 2008/1597 Supply of Machinery (Safety) Regulations 2008 (as amended).
- S.I. 2016:1091 Electromagnetic Compatibility Regulations 2016 (as amended).
- S.I. 2001:1701 Noise Emission in the Environment by Equipment for use Outdoors Regulations 2001 (as amended).

Falling into the category of road sweeper as defined in Annex 46 of Directive 2000/14/EC of the European Parliament and the Council, is subject to noise marking only.
The conformity evaluation was carried out in accordance with enclosure III.B.46 of the said directive.

MODEL	LwA [dB(A)]	LwA guaranteed [dB(A)]
FSR7 BASE	85,8	85,8

The person authorized to compile the technical file:

Mr. Giancarlo Ruffo
Via Invalidi del Lavoro, 1
37059 Santa Maria di Zevio (VR) - ITALY

Santa Maria di Zevio (VR), 28/03/2022

FIMAP S.p.A.
Legal representative
Giancarlo Ruffo