OPERATOR MANUAL

HDC170

Super Duty Combination Sweeper Scrubber

1800 100 150
sales@conquesteg.com
conquesteg.com

CONQUEST
With you, all the way

CONTENTS

CONTENTS **3**
DEFINITION OF LEVELS OF WARNING **6**
GENERAL SAFETY REGULATIONS **6**
GENERAL DESCRIPTION **7**
SYMBOLS USED IN THE MANUAL 7
TECHNICAL DESCRIPTION 8
INTENDED USE - PLANNED USE (TYPE OF SCRUBBING-DRYING WORK) 8
INTENDED USE - PLANNED USE (TYPE OF SWEEPING WORK) 9
SERIAL NUMBER PLATE 9
MAIN MACHINE COMPONENTS **10**
TECHNICAL DATA **15**
SYMBOLS USED ON THE MACHINE **17**
LABELS USED ON THE MACHINE **20**
CONTROL STATION **29**
MEMBRANE PUSH-BUTTON PANEL FOR MOVING THE DEBRIS HOPPER (COMBINED VERSION) 29
CONTROL PUSH-BUTTON PANEL 30
MEMBRANE PUSH-BUTTON PANEL FOR CONTROLLING BRUSHES (COMBINED VERSION) 30
CONTROL DISPLAY 31
PREPARATION OF MACHINE **33**
HANDLING THE PACKAGED MACHINE 33
HOW TO UNPACK THE MACHINE 33
MACHINE SAFETY 35
HOW TO MOVE THE MACHINE 38
HOW TO MOVE THE MACHINE WITH THE TRACTION IN NEUTRAL 41
TRACTION ELECTRIC BRAKE ACTIVATION 41
TYPE OF BATTERY PACK TO BE USED 42
BATTERY BOX MAINTENANCE AND DISPOSAL 42
INSERTING THE BATTERY BOX IN THE MACHINE 43
RECHARGING THE BATTERY BOX 43
ADJUSTMENT OF THE DRIVER'S SEAT (STANDARD SEAT) 44
ADJUSTMENT OF THE DRIVER'S SEAT (COMFORT SEAT) 45
INSERTING WATER SYSTEM FILTER 46
DETERGENT SOLUTION 47
ASSEMBLY OF BRUSHES OR DRIVE DISCS (DISCOID SCRUBBING VERSION) 50
WITHOUT RAPID-CENTERING KIT 50
WITH RAPID-CENTERING KIT 51
ASSEMBLING THE ABRASIVE PAD (DISCOID SCRUBBING VERSION) 53
ASSEMBLY OF THE SIDE BRUSH HEAD BRUSH OR DRIVE DISCS (DISCOID SCRUBBING VERSION) 54
ASSEMBLING THE SIDE BRUSH HEAD ABRASIVE PAD (DISCOID SCRUBBING VERSION) 54
FITTING OF BRUSHES (CYLINDRICAL SCRUBBING VERSION) 55
ASSEMBLY OF THE SIDE BRUSHES (CYLINDRICAL - COMBINED SCRUBBING VERSION) 57
ASSEMBLY OF BRUSHES (COMBINED VERSION) 58
WORK PREPARATION CHECKLIST **60**
WORKING PROGRAMS **63**
ECO MODE WORKING PROGRAM 63
POWER MODE WORKING PROGRAM 64
MANUAL MODE WORKING PROGRAM 65
PROGRAM ZONE WORKING PROGRAM 65
WORKING MODE **66**
TRANSFER WORKING MODE 66
SCRUBBER WORKING MODE 67
PRE-SCRUB WORKING MODE 69
DRYING WORKING MODE 71

SWEEPING WORKING MODE (COMBINED VERSION) 73
STARTING WORK 75
BATTERY BOX CHARGE LEVEL INDICATOR 79
HOUR METER 79
OVERFLOW DEVICE 80
EMPTYING THE DEBRIS HOPPER (CYLINDRICAL VERSION) 80
EMPTYING THE DEBRIS HOPPER (COMBINED VERSION) 81
ADDITIONAL FUNCTIONS 83
ADJUSTMENT OF THE DETERGENT SOLUTION FLOW 83
REGULATING THE FORWARD SPEED 83
EXTRA BRUSH HEAD PRESSURE 84
NOISELESS SUCTION 85
BUZZER 85
MAINTENANCE POSITION FUNCTION 85
BRUSH UNCOUPLING FUNCTION (DISCOID SCRUBBING VERSION) 86
ALARM SCREEN 87
EMERGENCY BUTTON 88
BRAKING CONTROL 88
REVERSE GEAR 89
SIDE BRUSH (COMBINED VERSION) 90
OPTIONAL FUNCTIONS 91
SERVICE LIGHTS 91
WORKING HEADLIGHTS 91
BLUE SAFETY LIGHT 92
USB PORT 92
SOS DEVICE 93
TAG INSERTION 93
ANTI-COLLISION SYSTEM 94
SIDE BRUSH (DISCOID SCRUBBING VERSION) 95
SIDE BRUSH (CYLINDRICAL SCRUBBING VERSION) 96
CONTINUOUS RECYCLING SYSTEM 97
AUTOMATIC DETERGENT DOSING SYSTEM 98
RECOVERY TANK SPRAY CLEANING GUN 99
LIQUID VACUUM WAND 101
AT THE END OF THE WORK 103
MAINTENANCE PLAN 104
DAILY MAINTENANCE 105
WEEKLY MAINTENANCE 106
MONTHLY MAINTENANCE 107
MAINTENANCE PRIOR TO EXTENDED PERIODS OF DOWNTIME 108
ROUTINE MAINTENANCE 110
CLEANING THE SQUEEGEE 111
CLEANING THE SQUEEGEE VACUUM HOSE 112
CLEANING THE COLLECTION FILTER TRAY 114
CLEANING THE WAVE PROTECTION TRAY 115
DRAINING THE RECOVERY TANK 116
CLEANING THE WATER SYSTEM FILTER 118
EMPTYING THE SOLUTION TANK 118
CLEANING THE FILTER ON THE AUTOMATIC CHEMICAL DETERGENT MANAGEMENT SYSTEM (FSS VERSION) 119
EMPTYING OF CHEMICAL DETERGENT TANK (FSS VERSION) 119
CLEANING THE FILTER ON THE DETERGENT SOLUTION RECYCLING SYSTEM (FLR VERSION) 120
CLEANING OF BRUSH HEAD DRIVE BRUSH - DISC (DISCOID SCRUBBING VERSIONS) 121
CLEANING OF BRUSH HEAD SIDE SPLASH GUARD (DISCOID SCRUBBING VERSION) 123
CLEANING OF SIDE BRUSH HEAD DRIVE BRUSH - DISC (DISCOID SCRUBBING VERSION) 123
CLEANING OF SIDE BRUSH HEAD SPLASH GUARD (DISCOID SCRUBBING VERSION) 124
CLEANING OF SIDE BRUSH HEAD SQUEEGEE (DISCOID SCRUBBING VERSION) 125
CLEANING OF BRUSH HEAD BRUSH (CYLINDRICAL SCRUBBING VERSIONS) 126

CLEANING OF BRUSH HEAD SIDE SPLASH GUARD (CYLINDRICAL SCRUBBING VERSION) 127
CLEANING THE DEBRIS HOPPER (CYLINDRICAL SCRUBBING VERSION) 128
CLEANING THE SIDE BRUSH (CYLINDRICAL - COMBINED SCRUBBING VERSION) 129
CLEANING THE BRUSH HEAD BRUSHES (COMBINED VERSION) 130
CLEANING THE DEBRIS HOPPER VACUUM FILTER (COMBINED VERSION) 131
CLEANING THE DEBRIS HOPPER (COMBINED VERSION) 132
EXTRAORDINARY MAINTENANCE WORK 135
REPLACING THE SQUEEGEE RUBBER BLADES 136
REPLACEMENT OF BRUSH HEAD DRIVE BRUSHES OR DISCS (DISCOID SCRUBBING VERSION) 138
REPLACEMENT OF BRUSH HEAD SIDE SPLASH GUARD (DISCOID SCRUBBING VERSION) 139
REPLACEMENT OF SIDE BRUSH HEAD DRIVE BRUSH OR DISCS (DISCOID SCRUBBING VERSION) .. 140
REPLACEMENT OF SIDE BRUSH HEAD SPLASH-GUARD RUBBER BLADE (DISCOID SCRUBBING VERSION) 141
REPLACEMENT OF SIDE BRUSH HEAD SQUEEGEE RUBBER BLADES (DISCOID SCRUBBING VERSION) 141
REPLACING THE BRUSH HEAD BRUSHES (CYLINDRICAL SCRUBBING VERSION) 143
REPLACEMENT OF BRUSH HEAD SIDE SPLASH GUARD (CYLINDRICAL SCRUBBING VERSION) 143
REPLACEMENT OF THE SIDE BRUSH (CYLINDRICAL-COMBINED SCRUBBING VERSION) 145
REPLACING THE SWEEPING BRUSH HEAD BRUSHES (COMBINED VERSION) 146
ADJUSTMENT INTERVENTIONS 148
ADJUSTING THE SQUEEGEE RUBBER BLADES 148
ADJUSTMENT OF BRUSH HEAD SIDE SPLASH GUARD (DISCOID SCRUBBING VERSION) 151
ADJUSTMENT OF BRUSH HEAD SIDE SPLASH GUARD (CYLINDRICAL SCRUBBING VERSION) 152
ADJUSTMENT OF THE SIDE BRUSH (CYLINDRICAL SCRUBBING VERSION) 154
ADJUSTING THE SIDE BRUSH (COMBINED VERSION) 155
DISPOSAL 157
CHOOSING AND USING BRUSHES 158
BRUSHES OR DRIVE DISCS (DISCOID SCRUBBING VERSION) 159
BRUSHES OR DRIVE DISCS (CYLINDRICAL SCRUBBING VERSION) 160
BRUSHES OR DRIVE DISCS (COMBINED VERSION) 161
TROUBLESHOOTING 162
THE MACHINE DOES NOT START 162
THE BATTERY BOX IS NOT COMPLETELY CHARGED 162
THE MACHINE HAS A VERY LOW WORK AUTONOMY 162
THE MACHINE DOES NOT MOVE 163
INSUFFICIENT DETERGENT SOLUTION ON THE BRUSHES 163
THE MACHINE DOES NOT CLEAN CORRECTLY 164
THE SQUEEGEE DOES NOT DRY CORRECTLY 166
EXCESSIVE FOAM PRODUCTION 167
THE MACHINE DOES NOT VACUUM CORRECTLY 167
EXCESSIVE DUST PRODUCTION (COMBINED VERSION) 167
EC DECLARATION OF CONFORMITY 168
UKCA DECLARATION OF CONFORMITY 170

DEFINITION OF LEVELS OF WARNING

DANGER: indicates an imminent dangerous situation that, unless avoided, will result in death or serious injuries.

WARNING: Indicates a potentially dangerous situation that, unless avoided, could cause death of serious injury.

ATTENTION: Indicates a potentially dangerous situation that, unless avoided, could cause slight or moderate injuries.

N.B.: instructs the reader to pay particular attention to the topic that follows.

GENERAL SAFETY REGULATIONS

Before using the machine, please read the following document carefully and follow the instructions contained herein, along with the instructions in the document supplied with the machine itself, "GENERAL SAFETY REGULATIONS" (document number 10083659).

GENERAL DESCRIPTION

The descriptions contained in this document are not binding. The company therefore reserves the right to make any modifications at any time to elements, details, or accessory supply, as considered necessary for reasons of improvement or manufacturing/commercial requirements. The reproduction, even partial, of the text and drawings contained in this document is prohibited by law.

The company reserves the right to make any technical and/or supply modifications. The images are for reference purposes only, and are not binding in terms of design and supply.

SYMBOLS USED IN THE MANUAL



Open book symbol with an "i":
Indicates the need to consult the instruction manual.



Open book symbol:
Tells the operator to read the user manual before using the device.



Covered place symbol:
The operations preceded by this symbol must always be carried out in a dry, covered area.



Information symbol:
Indicates additional information for the operator, to improve the use of the device.



Warning symbol:
Carefully read the sections preceded by this symbol meticulously following the instructions indicated for the safety of the operator and the device.



Danger symbol (corrosive substances):
The operator should always wear protective gloves to avoid the risk of serious injury to the hands caused by corrosive substances.



Danger symbol (battery acid leakage):
Indicates the danger of leaking acid or acid fumes from the batteries while they are being recharged.



Danger symbol (moving carriages):
Indicates that the packed product should be handled with suitable carriages that conform to legal requirements.



Anchor point symbol:
Indicates the locations of the anchor points to be used to safely tow or secure the machine.

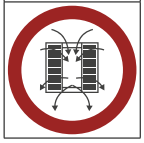

Mandatory room ventilation symbol:
Informs the operator that the room must be ventilated while the batteries are being recharged.



Symbol indicating the compulsory use of protective gloves:
Indicates that the operator should always wear protective gloves, to avoid the risk of serious injury to his hands from sharp objects.



Symbol indicating the compulsory use of tools:
Informs the operator of the need to use tools not included with the machine.



Symbol indicating a treading ban:
Informs the operator that it is forbidden to tread on machine components, as this could lead to serious injury.



Recycling symbol:
Tells the operator to carry out the operations in compliance with environmental regulations in force in the place where the appliance is being used.



Disposal symbol:
Carefully read the sections marked with this symbol for disposing of the appliance.

TECHNICAL DESCRIPTION

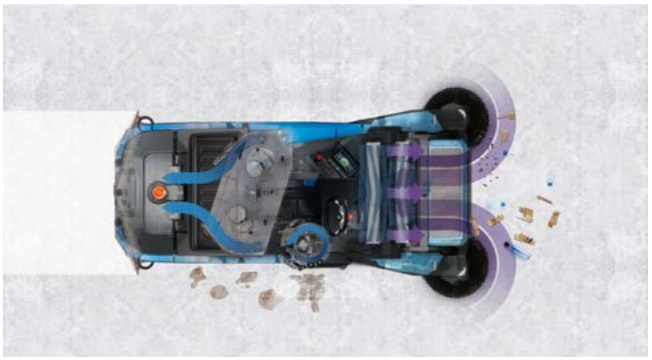

Using the mechanical action of two brushes combined with a chemical solution delivered to the brushes via a pump-controlled water system, the machine is capable of cleaning a wide range of floors and types of dirt. When the machine moves forward, the squeegee collects the dirty solution from the floor, and the vacuum system transfers the dirty solution into the recovery tank. Simultaneously - using the mechanical action of two central front brushes for collecting the swept debris, two side brushes for perimeter and corner cleaning, a suction system equipped with a filter to prevent dust from rising and a debris hopper that can be moved automatically using electric pistons - the machine can be used to clean both indoor and outdoor surfaces, on tiled, concrete or asphalt floors. The machine must operate on dry surfaces, and if necessary can also work on wet surfaces, provided the vacuum function is not active.
The machine must be used only for this purpose.

INTENDED USE - PLANNED USE (TYPE OF SCRUBBING-DRYING WORK)

This machine was designed and built for the cleaning (scrubbing and drying) of smooth, compact flooring in the commercial, residential and industrial sectors by a qualified operator in proven safety conditions. This machine is not suitable for cleaning carpets or rugs. This machine is only suitable for use in closed (or at least covered) spaces.

ATTENTION: the machine is not suitable for use in the rain, or under water jets.

ATTENTION: IT IS FORBIDDEN to use the machine for picking up dangerous dusts or inflammable liquids in places with an explosive atmosphere. In addition, it is not suitable as a means of transport for people or objects.

INTENDED USE - PLANNED USE (TYPE OF SWEEPING WORK)

This machine is designed and built to clean both indoor and outdoor flooring surfaces in tile, cement and asphalt. They are intended exclusively for professional use by a qualified operator in industrial, commercial and public contexts, in guaranteed safe conditions.

ATTENTION: the sweeping machine is not designed to clean carpets or rugs. It is not suitable for use in closed places and should be used in open but covered areas (it must not be used in the rain or underneath jets of water).

IT IS FORBIDDEN: to use the sweeping machine in places with an explosive atmosphere or to collect hazardous dust or inflammable liquids. In addition, it must not be used for transporting people or objects.

SERIAL NUMBER PLATE

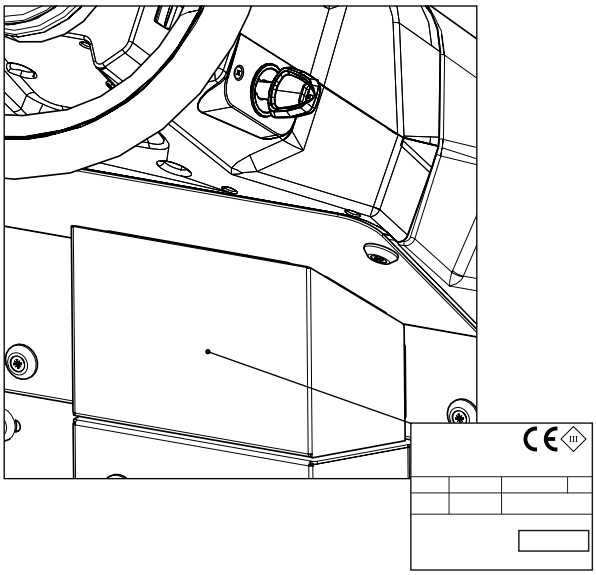

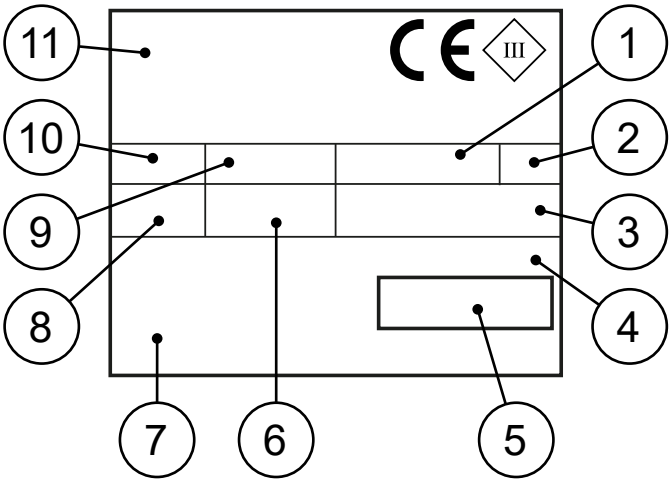

The serial number plate is located near the driver's seat, at the rear of the steering column, and indicates the machine's general characteristics, including its serial number. The serial number is a very important piece of information and should always be provided together with any request for assistance or when purchasing spare parts. The serial number plate contains the following information:

1. The weight of the batteries that power the machine (expressed in kg).
2. The IP protection rating of the machine.
3. The value in Kg of the GVW (Gross Vehicle Weight), see “TECHNICAL DATA” on page 15.
4. The machine ID code.
5. The machine serial number.
6. The machine ID name.
7. The value expressed in W of the nominal power used by the machine, see “TECHNICAL DATA” on page 15.
8. The value expressed in % of the maximum gradeability during work, see “TECHNICAL DATA” on page 15.
9. The year of machine manufacture.
10. The value expressed in V of the nominal voltage used by the machine, see “TECHNICAL DATA” on page 15.
11. The commercial name of the machine, and the manufacturer's address.

MAIN MACHINE COMPONENTS

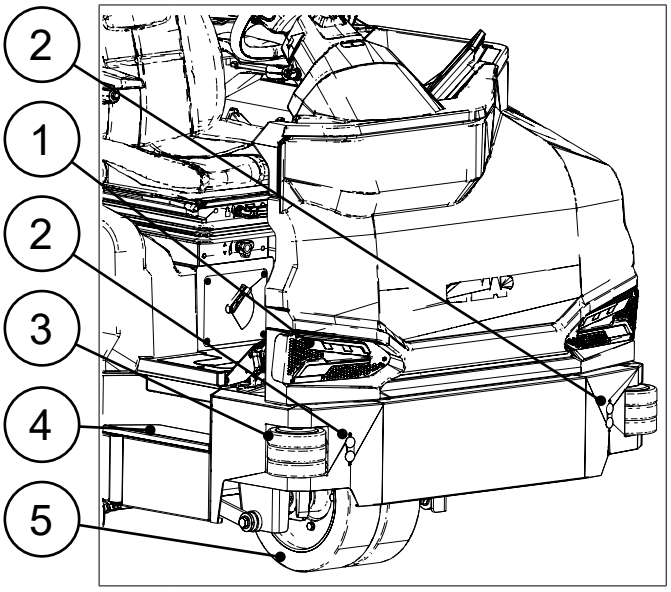

1 Working headlights (optional)
2 Anti-collision system sensor (optional)
3 Front bumper wheels
4 Rung
5 Front wheels

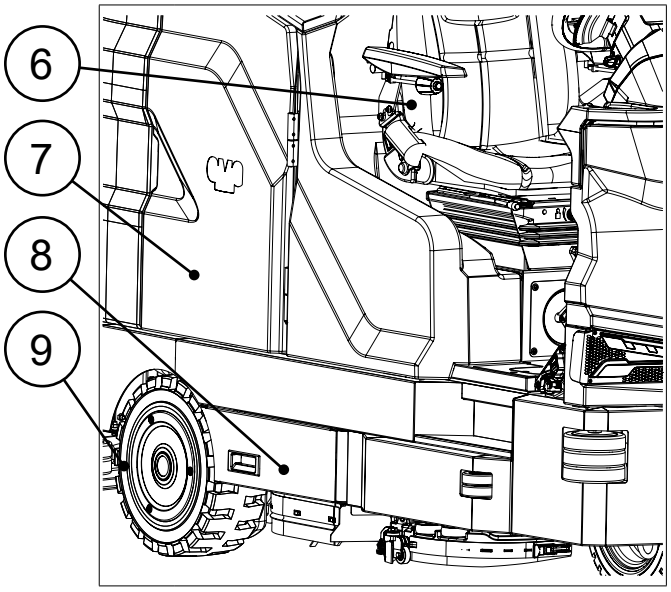

6 Driver's seat
7 Right rear door
8 Brush head inspection door
9 Right rear motorwheel

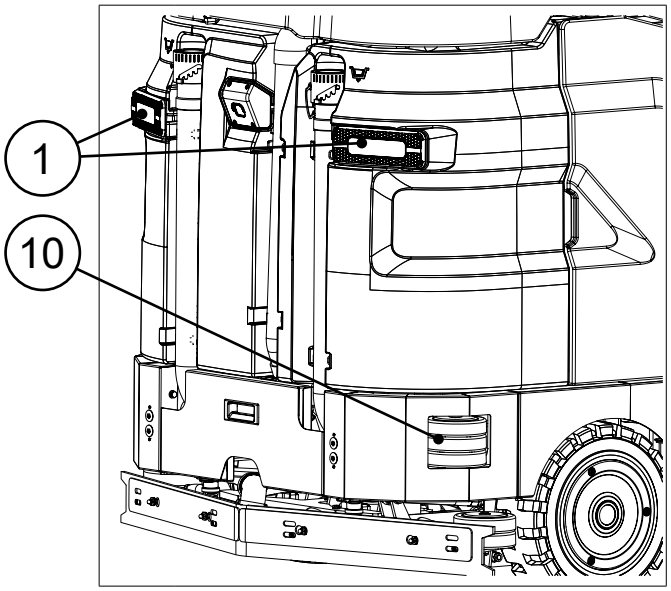

1 Working headlights (optional)
10 Rear bumper wheels

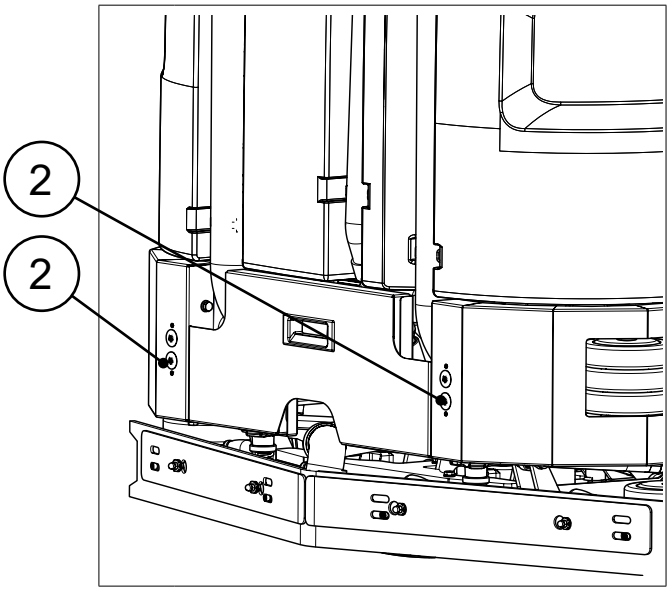

2 Anti-collision system sensor (optional)

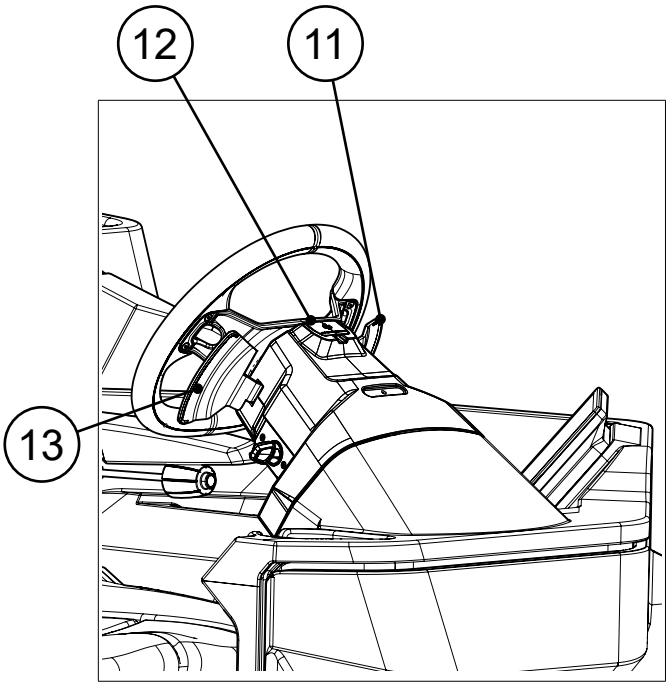

11 POWER MODE working program activation lever.

12 Automatic technical assistance request button (FFM system optional)

13 Reverse gear function control lever

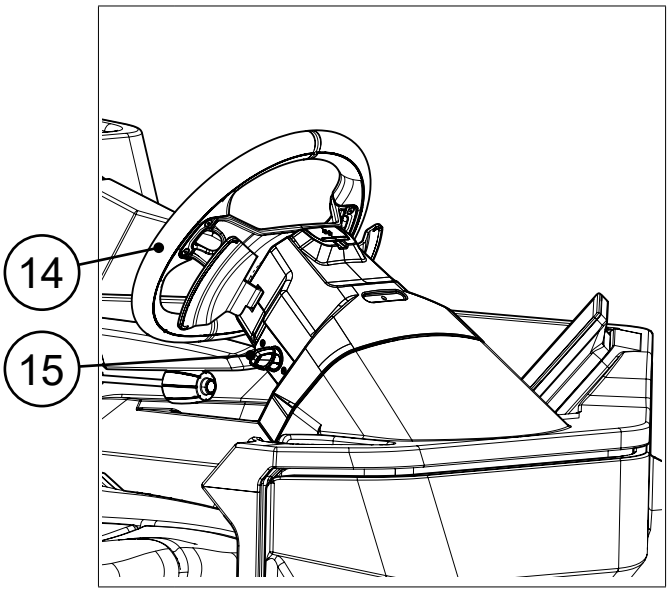

14 Steering wheel

15 Key-operated main switch

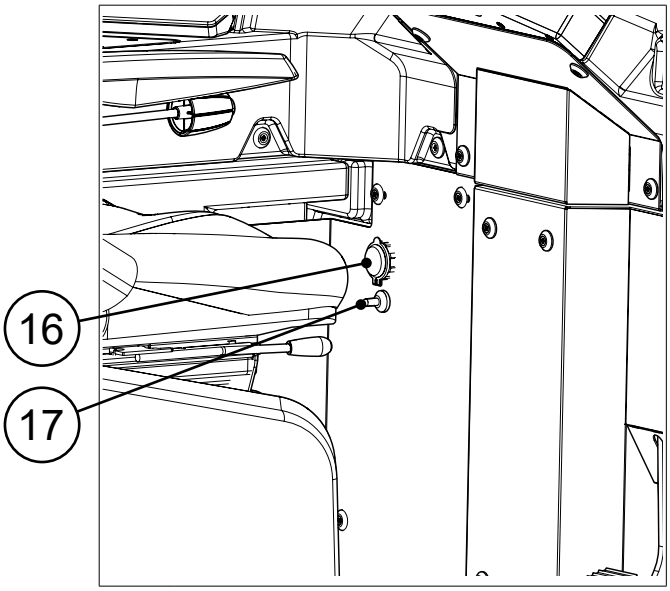

16 USB port (optional)

17 Blinking lights control switch (optional)

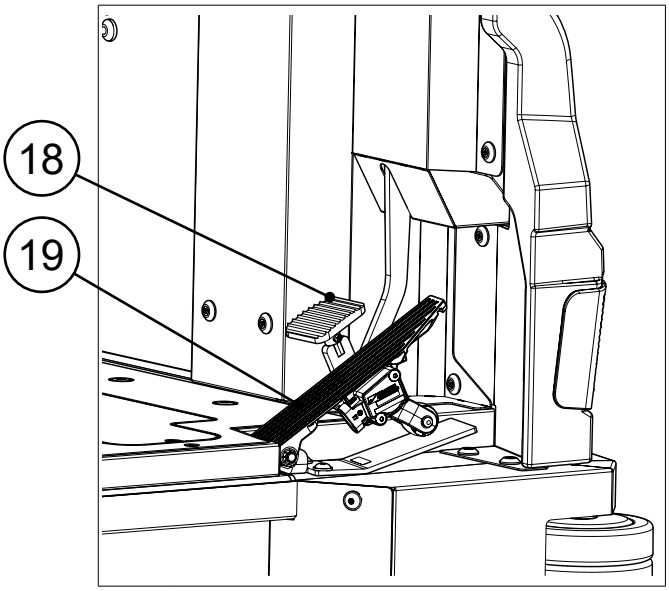

18 Service brake pedal

19 accelerator pedal

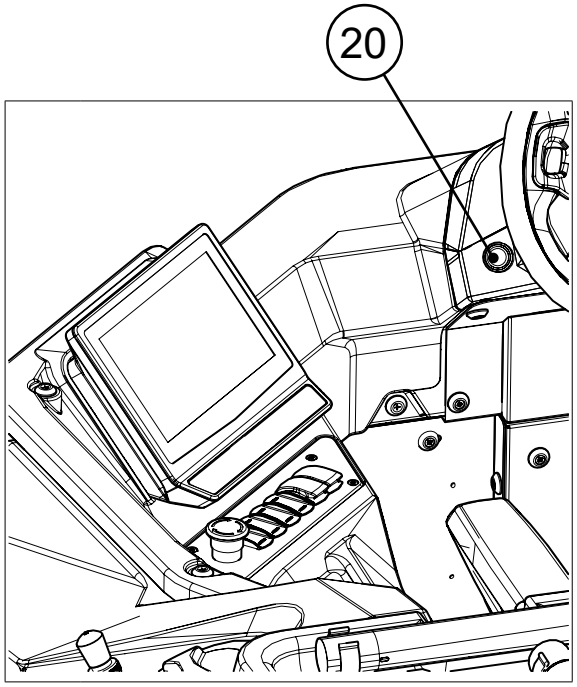

20 Horn button

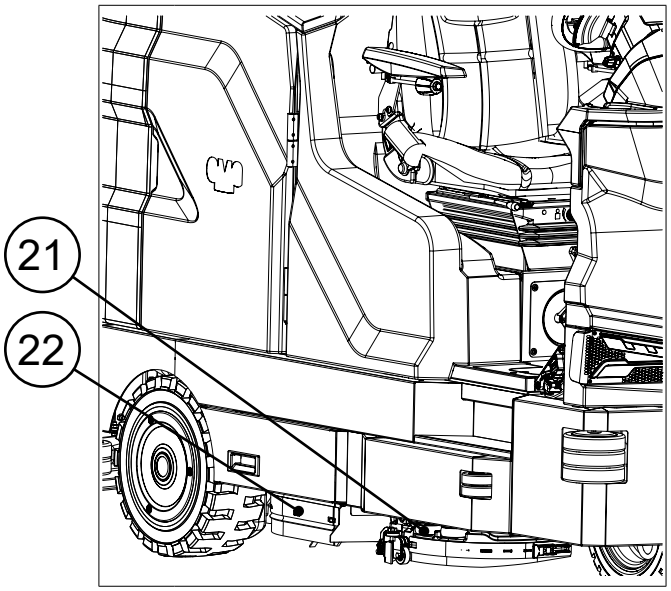

21 Side brush head, valid for discoid scrubbing version (optional)

22 Central brush head, valid for discoid scrubbing version

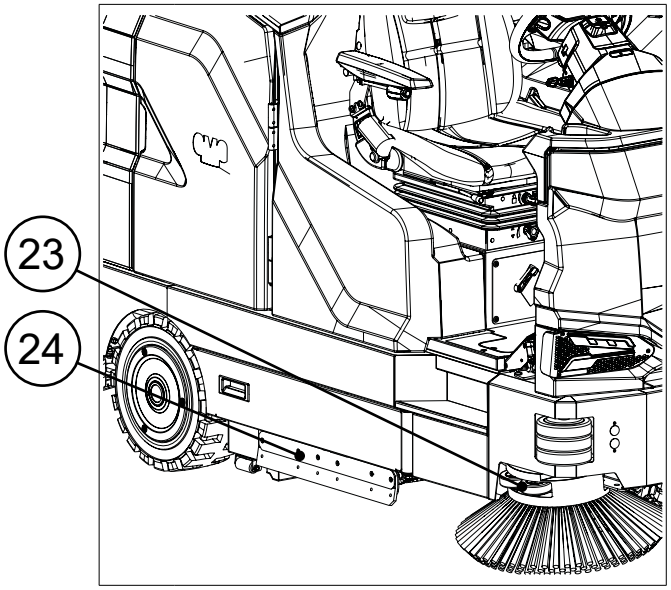

23 Side sweeping brush, valid for cylindrical scrubbing versions (optional)

24 Central brush head, valid for cylindrical scrubbing versions

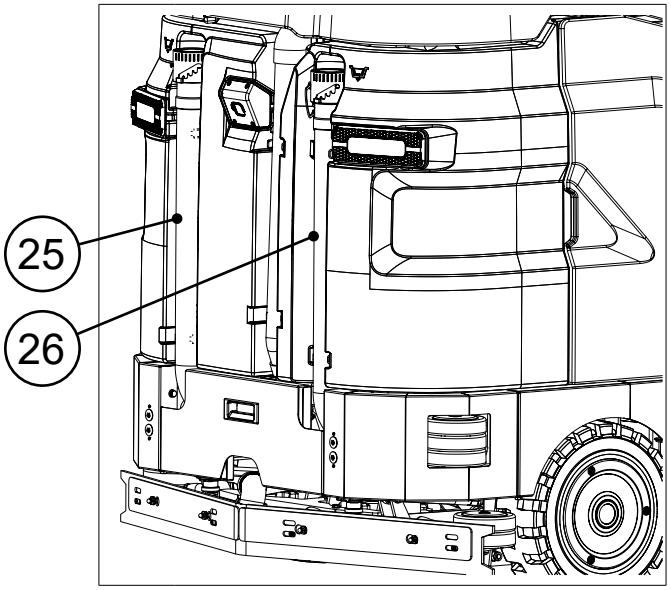

25 Solution tank drain hose

26 recovery tank drainage tube

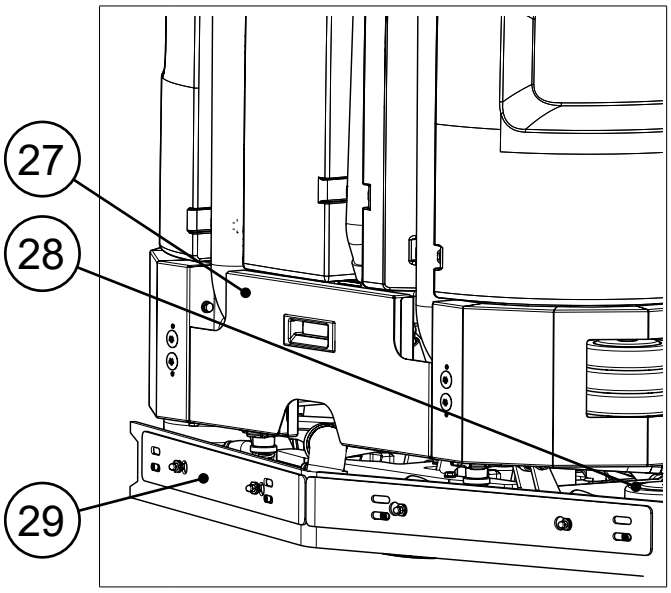

27 Inspection footboard and recovery tank maintenance

28 Squeegee bumper wheels

29 Squeegee

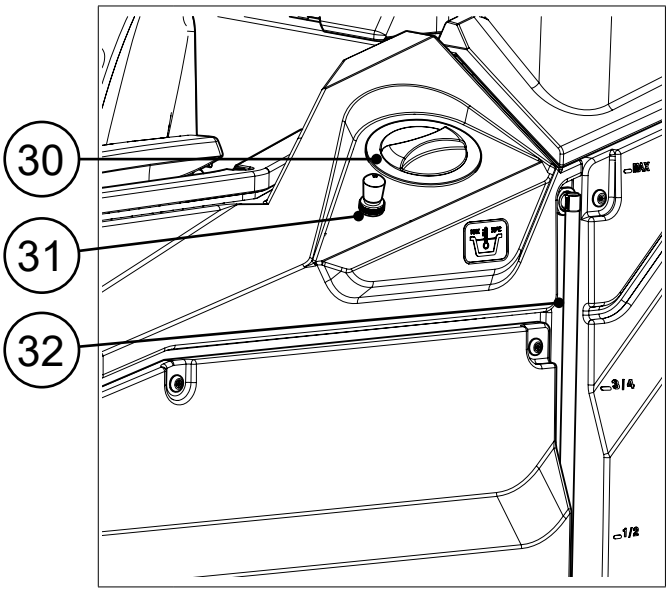

30 Solution tank filler cap

31 Solution tank quick filling kit hose connector (FFF system optional)

32 Solution tank fill volume level hose

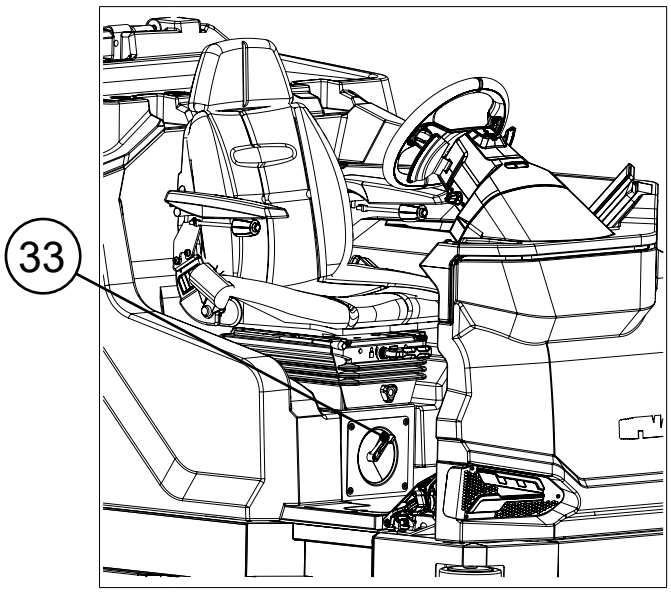

13 Detergent solution delivery control lever

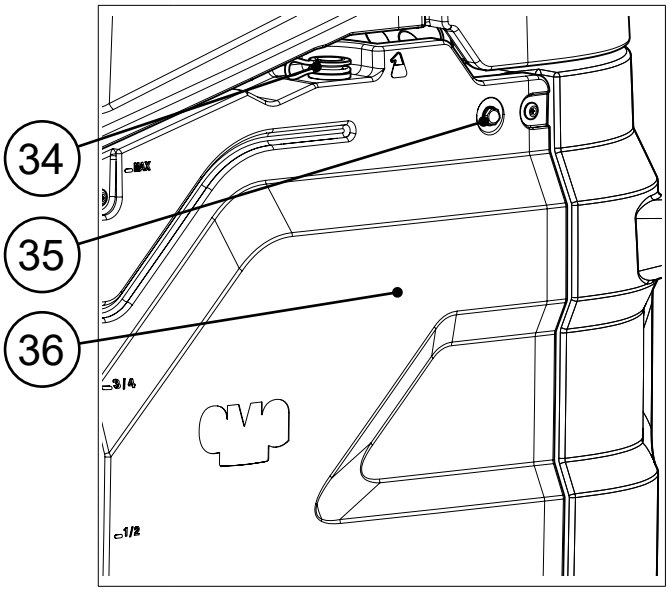

34 Chemical detergent filler cap (FSS system optional)

35 Chemical detergent tank MAX level indicator (FSS system optional)

36 Chemical detergent tank (FSS system optional)

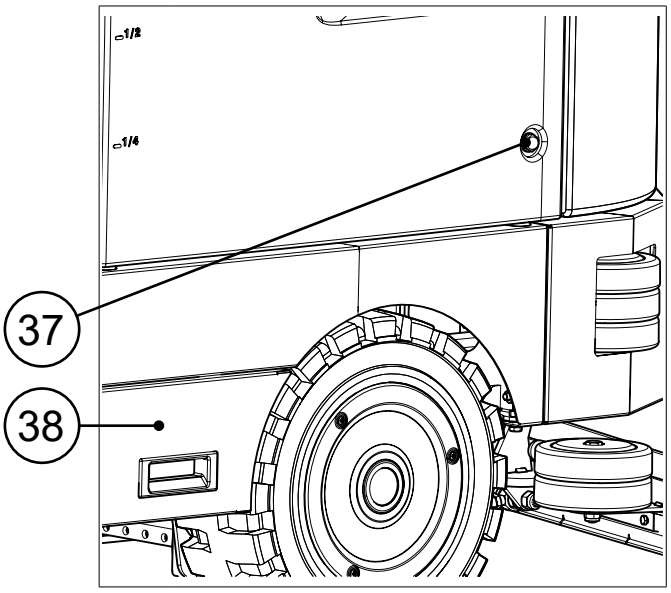

37 Chemical detergent tank MIN level indicator (FSS system optional)

38 Brush head and water system filter inspection door

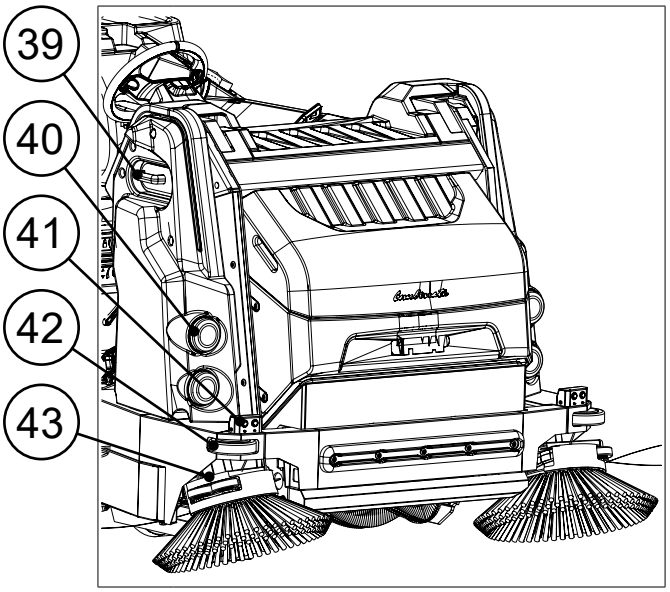

39 Debris hopper maintenance safety stop

40 Working headlights (optional)

41 Anti-collision system sensor (optional)

42 Front bumper wheel

43 Side sweeping brush

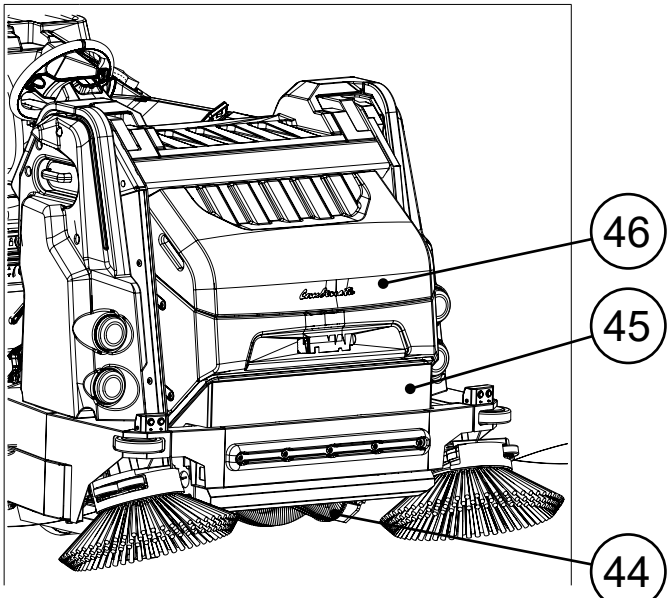

44 Central brush brush head

45 Debris hopper

46 Vacuum filter cover

TECHNICAL DATA	UM [SI]	GMG B PRO	GMG BS PRO	GMG BC PRO
Rated voltage [IEC 60335-2-72; IEC 62885-9]	V	36	36	36
Nominal input power [IEC 60335-2-72; IEC 62885-9]	KW	10,7	11,4	13,6
Working gradeability with weight GVW [IEC 60335-2-72; IEC 62885-9]	%	20	20	20
GVW (Gross Vehicle Weight) [IEC 60335-2-72; IEC 62885-9]	kg	2215	2205	2745
Weight during transport [IEC 60335-2-72; IEC 62885-9]	kg	1795	1820	2250
Machine dimensions during working phase (length; height width)	mm	2310 1555 1250	2310 1555 1250	2965 1555 1525
Operator station sound pressure level (Lp_A) [IEC 60335-2-72; IEC 62885-9; ISO 11201]	dB (A)	67	67	71,5
Sound power level (Lw_A) [IEC 60335-2-72; IEC 62885-9; ISO 3744]	dB (A)	88	88	92,2
Uncertainty Kp_A	dB (A)	±1.5	±1.5	1.5
Hand-arm vibrations [IEC 60335-2-72; IEC 62885-9; ISO 5349-1]	m/s^2	0,5	0,5	0,81
Whole-body vibrations [IEC 60335-2-72; IEC 62885-9; ISO 2631-1]	m/s^2	0.4	0.4	0,45
Vibration measurement uncertainty		±4%	±4%	±4%

N.B.: for all other technical data, contact the FIMAP service centre of reference or the one closest to you, or visit the website www.fimap.com.

TECHNICAL DATA	UM [SIB]	GMG B PRO	GMG BS PRO	GMG BC PRO
Rated voltage [IEC 60335-2-72; IEC 62885-9]	V	36	36	36
Nominal input power [IEC 60335-2-72; IEC 62885-9]	KW	10,7	11,4	13,6
Working gradeability with weight GVW [IEC 60335-2-72; IEC 62885-9]	%	20	20	20
GVW (Gross Vehicle Weight) [IEC 60335-2-72; IEC 62885-9]	lbs	4883,24	4861,19	6.051,69
Weight during transport [IEC 60335-2-72; IEC 62885-9]	lbs	3957,30	4012,41	4.960,40
Machine dimensions during working phase (length; height width)	in	90,94 61,22 49,21	90,94 61,22 49,21	116,73 61,22 60,04
Operator station sound pressure level (Lp_A) [IEC 60335-2-72; IEC 62885-9; ISO 11201]	dB (A)	67	67	71,5
Sound power level (Lw_A) [IEC 60335-2-72; IEC 62885-9; ISO 3744]	dB (A)	88	88	92,2
Uncertainty Kp_A	dB (A)	±1.5	±1.5	1.5
Hand-arm vibrations [IEC 60335-2-72; IEC 62885-9; ISO 5349-1]	m/s^2	0,5	0,5	0,81
Whole-body vibrations [IEC 60335-2-72; IEC 62885-9; ISO 2631-1]	m/s^2	0.4	0.4	0,45
Vibration measurement uncertainty		±4%	±4%	±4%

N.B.: for all other technical data, contact the FIMAP service centre of reference or the one closest to you, or visit the website www.fimap.com.

SYMBOLS USED ON THE MACHINE

P	**Extra pressure activation/deactivation lever position symbol:** Used on the extra brush head pressure activation-deactivation lever, see “POWER MODE WORKING PROGRAM” on page 64

R	**Reverse gear activation/deactivation lever position symbol:** Used on the reverse activation-deactivation lever, see”REVERSE GEAR” on page 89.

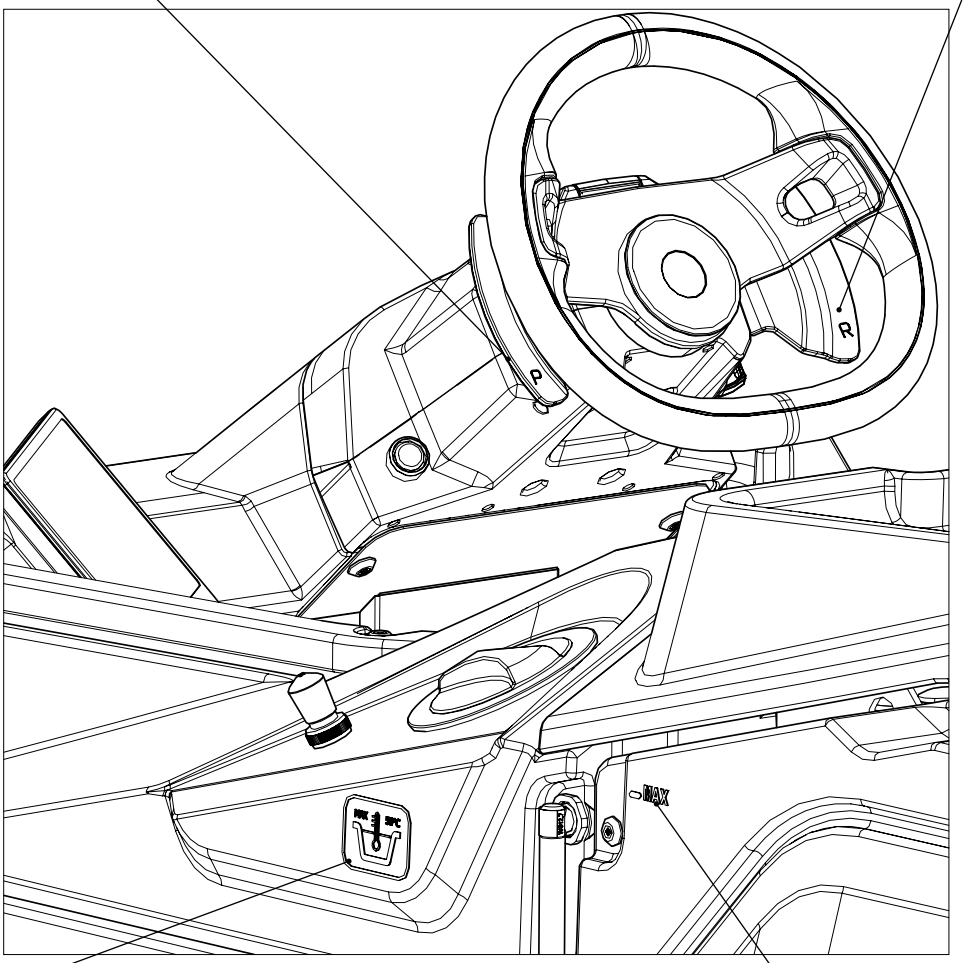

	Symbol for maximum temperature for filling the solution tank: Applied to the left-hand side of the machine's solution tank to indicate the maximum temperature of the water that can be used to safely fill the solution tank, see “DETERGENT SOLUTION” on page 47.

	**Solution tank filling symbol:** Located on the left side of the machine's solution tank to indicate the amount of water or detergent solution in the tank. On the side there are four symbols representing ¼ of the solution tank's total capacity. The image to the side shows that the tank is full.

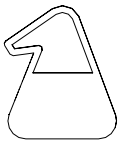	**Chemical detergent symbol:** Applied to the left-hand side of the machine's solution tank to indicate the chemical detergent tank. Symbol only valid for versions with automatic management of the chemical product, see “DETERGENT SOLUTION” on page 47.

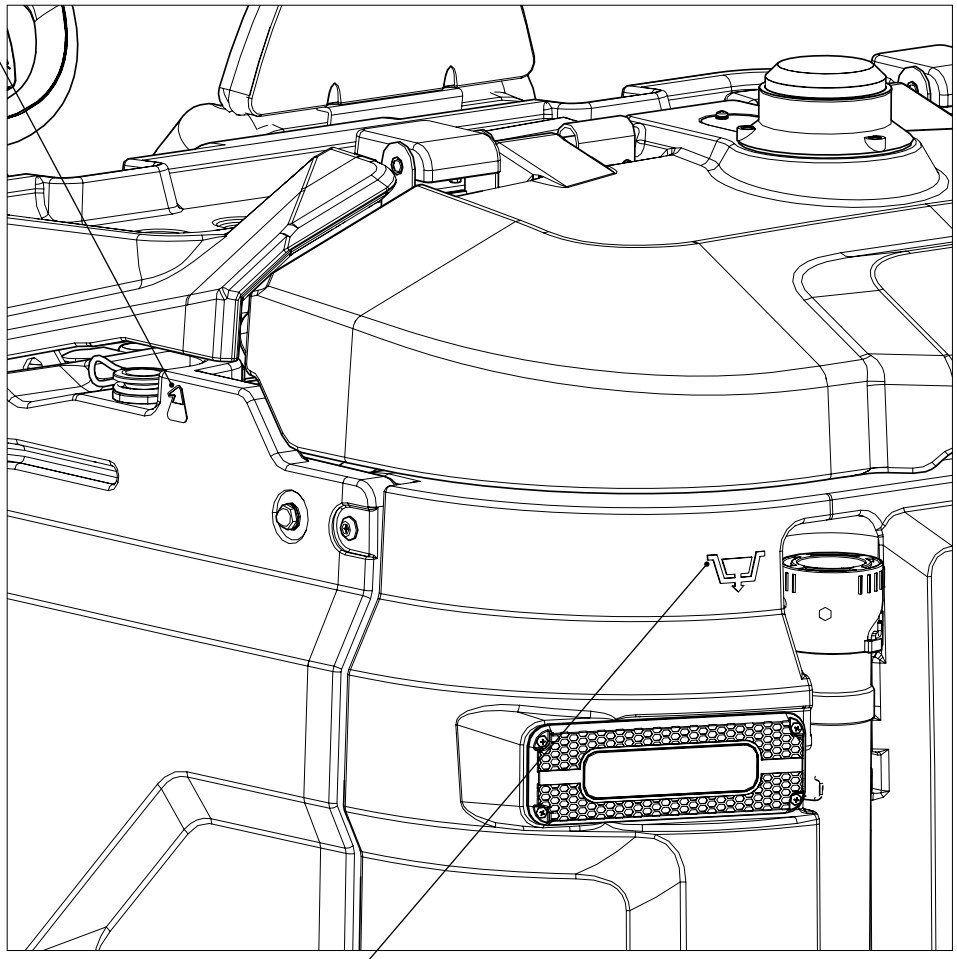

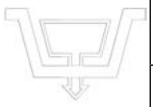	**Recovery tank drainage hose symbol:** Used on the rear right-hand side of the machine, to identify the recovery tank emptying tube, see “DRAINING THE RECOVERY TANK” on page 116.
	Solution tank drain pipe symbol: Used on the rear right-hand side of the machine, to identify the solution tank emptying tube, see “EMPTYING THE SOLUTION TANK” on page 118.

	**Service function symbol:** Used on the control panel to indicate the switch that enables the maintenance position function, see “MAINTENANCE POSITION FUNCTION” on page 85.
	**Brush uncoupling function symbol:** Used on the control panel to indicate the switch that enables the "BRUSH UNCOUPLING" function, see “BRUSH UNCOUPLING FUNCTION (DISCOID SCRUBBING VERSION)” on page 86.
	**Recovery tank spray cleaning gun activation symbol:** Used on the control panel to indicate the switch that controls the internal cleaning system of the recovery tank through the spray gun, see “RECOVERY TANK SPRAY CLEANING GUN” on page 99.
	**Vacuum wand activation symbol:** Used on the control panel to indicate the switch that controls the liquid vacuum wand, see “LIQUID VACUUM WAND” on page 101.

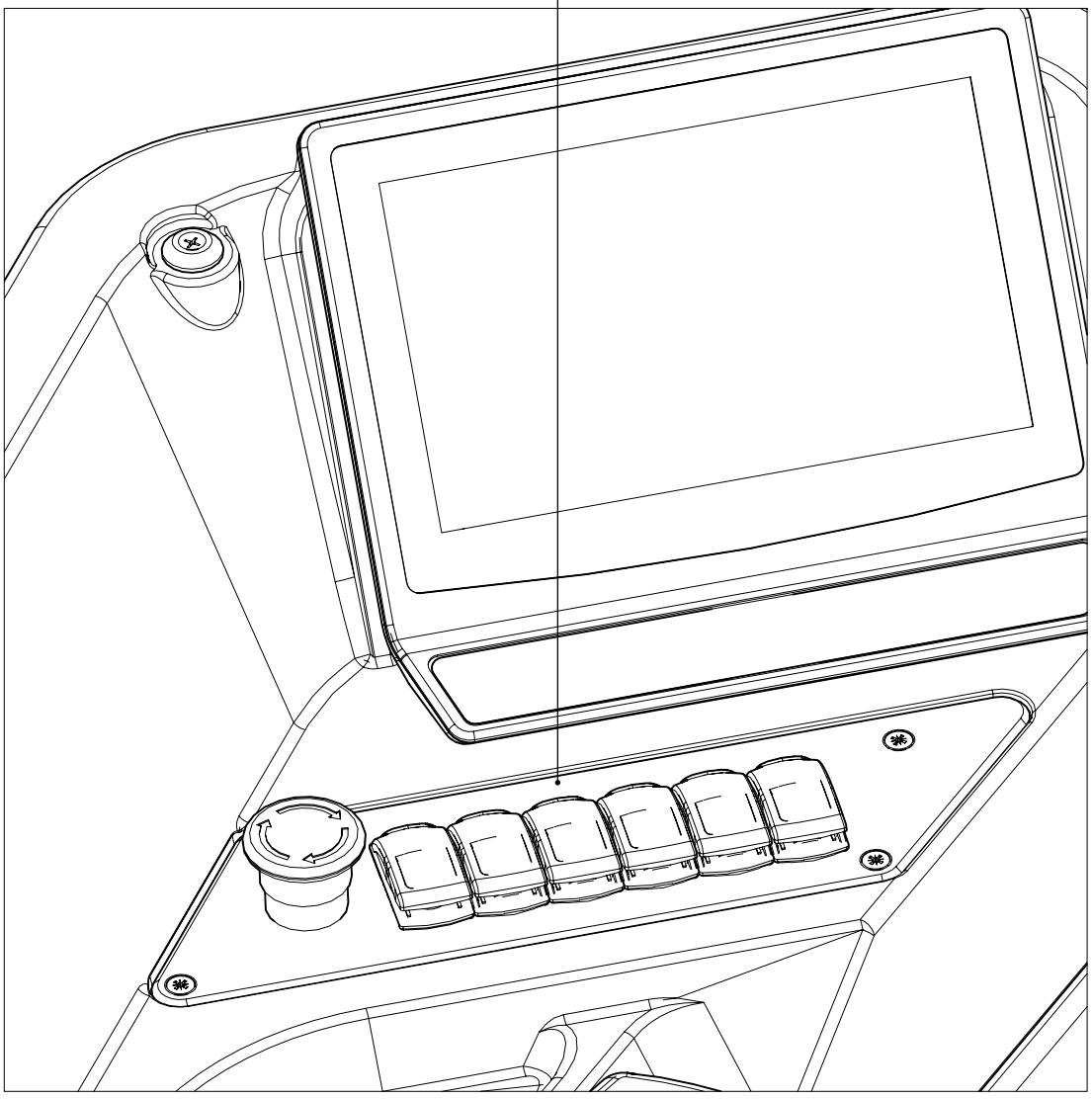

LABELS USED ON THE MACHINE

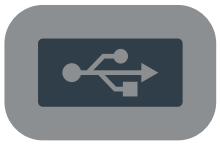

USB port label:
Applied to the lower part of the steering column to indicate the location of the two USB ports, see “USB PORT” on page 92.



Machine main switch label:
Applied to the lower part of the steering column to indicate the location of the machine's main switch.



"Operator present" label (combined version):
Used on the lower part of the steering column to indicate the position of the operator presence button, used during the rotation phase in the work position of the debris hopper in the combined version.

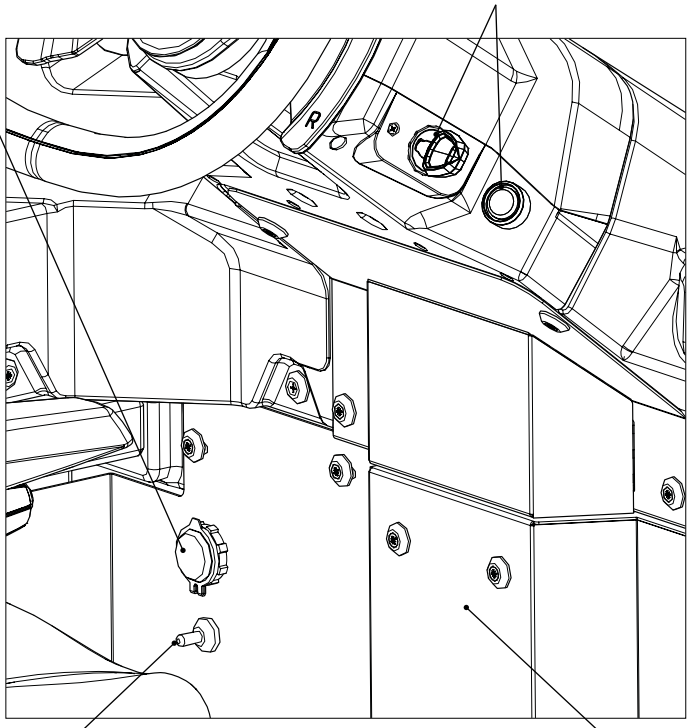



Blinking lights control label:
Applied to the lower part of the steering column to indicate the location of the blinking light control switch, see “SERVICE LIGHTS” on page 91



Prohibition to vacuum hazardous elements label:
Applied to the lower part of the steering column to indicate that it is strictly prohibited to vacuum incandescent particles or flammable and/or explosive powders and/or liquids with the machine, and to operate the machine in their vicinity.



Tap control lever label:
Applied to the front of the solution tank to indicate the tap control lever.

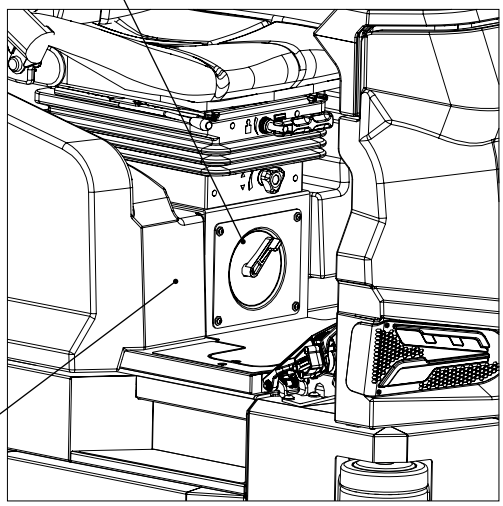

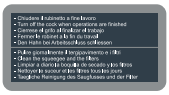

Daily maintenance label:
Used on the front of the solution tank, near the tap control lever, to indicate the need to close the tap at the end of work and to carry out daily maintenance “DAILY MAINTENANCE” on page 105



Anchor hook label:
Applied to the front of the machine to identify the two hooks used to securely anchor the machine.

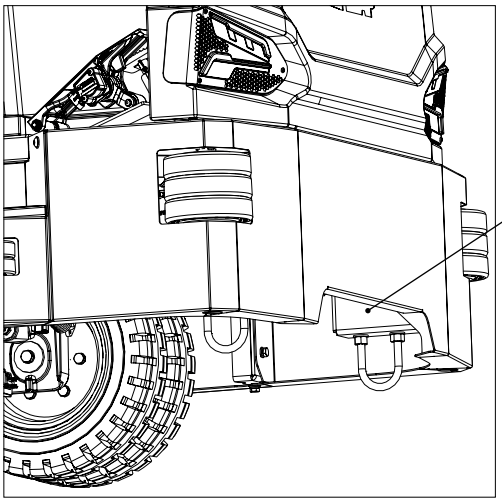

Label indicating the need to read the Use and Maintenance Manual:
Applied to the front of the steering column to indicate the need for the user to read the user and maintenance manual before operating the machine.



Horn button label:
Applied to the left side of the steering column to identify the machine's horn button.



Side scrubbing brush uncoupling lever label (optional):
Applied to the front of the side brush head to indicate the side scrubbing brush uncoupling lever.

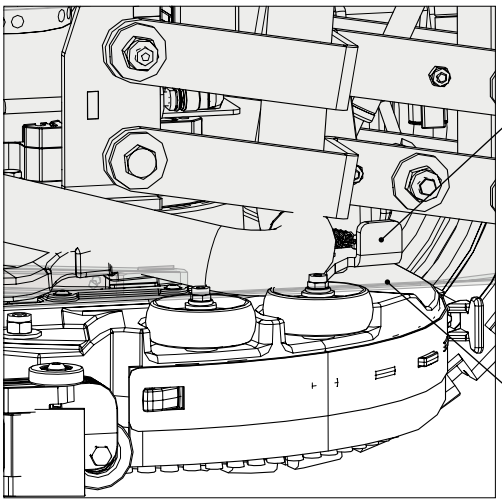



Label indicating that touching the brush when moving is prohibited:
Applied to the side brush head to indicate the prohibition to place your hands in the vicinity of the brush head while the brush is in motion.



Rated voltage label:
Applied to the electrical system connector support to indicate the machine's rated voltage value.

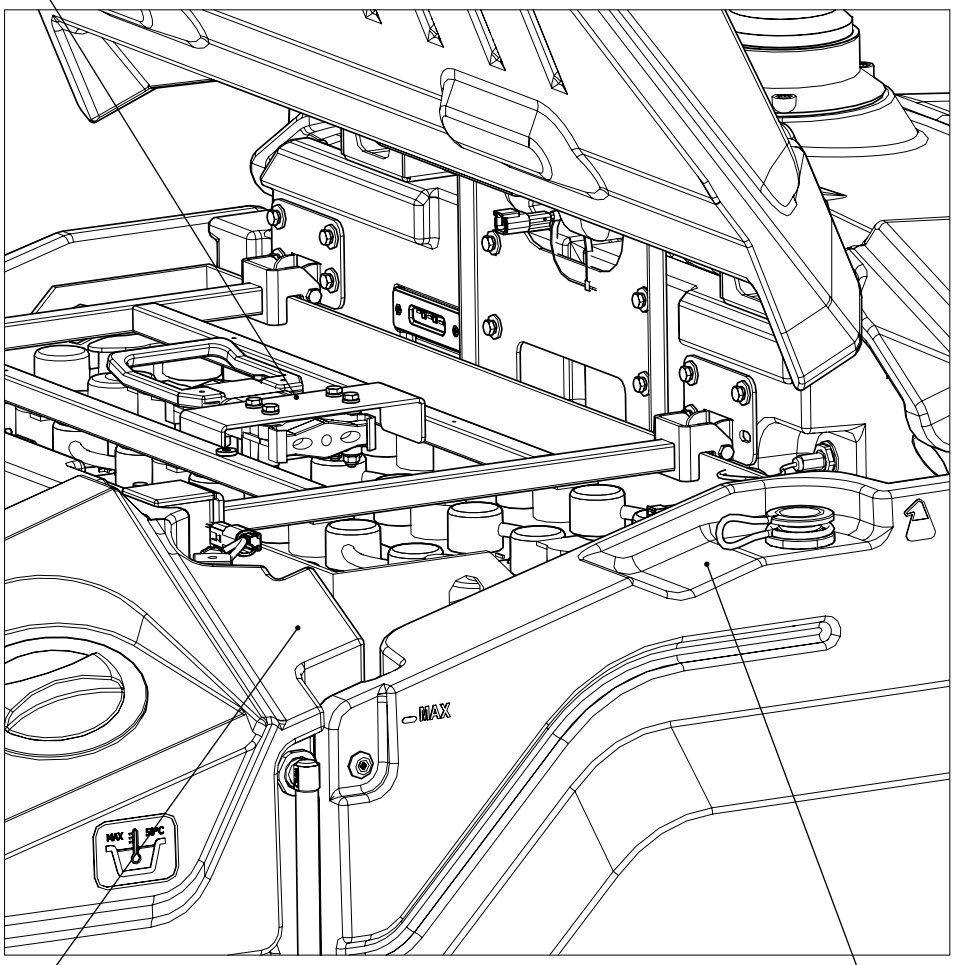



Label warning about the risk of crushed hands:
Applied to the solution tank to indicate the areas where hand crushing hazards are present.



Chemical pH range label (FSS versions):
Applied near the detergent tank's cap to indicate the chemical product pH range within which the FSS system operates without causing damage to the machine.



Battery box warning label:
Applied to the inside of the battery box lid to warn that the cells could release highly flammable hydrogen gas during the recharging phase, see “RECHARGING THE BATTERY BOX” on page 43.



Battery box charging instructions label:
Applied to the inside of the battery box lid to indicate to the user which procedures need to be carried out for correct charging of the battery box, see “RECHARGING THE BATTERY BOX” on page 43.

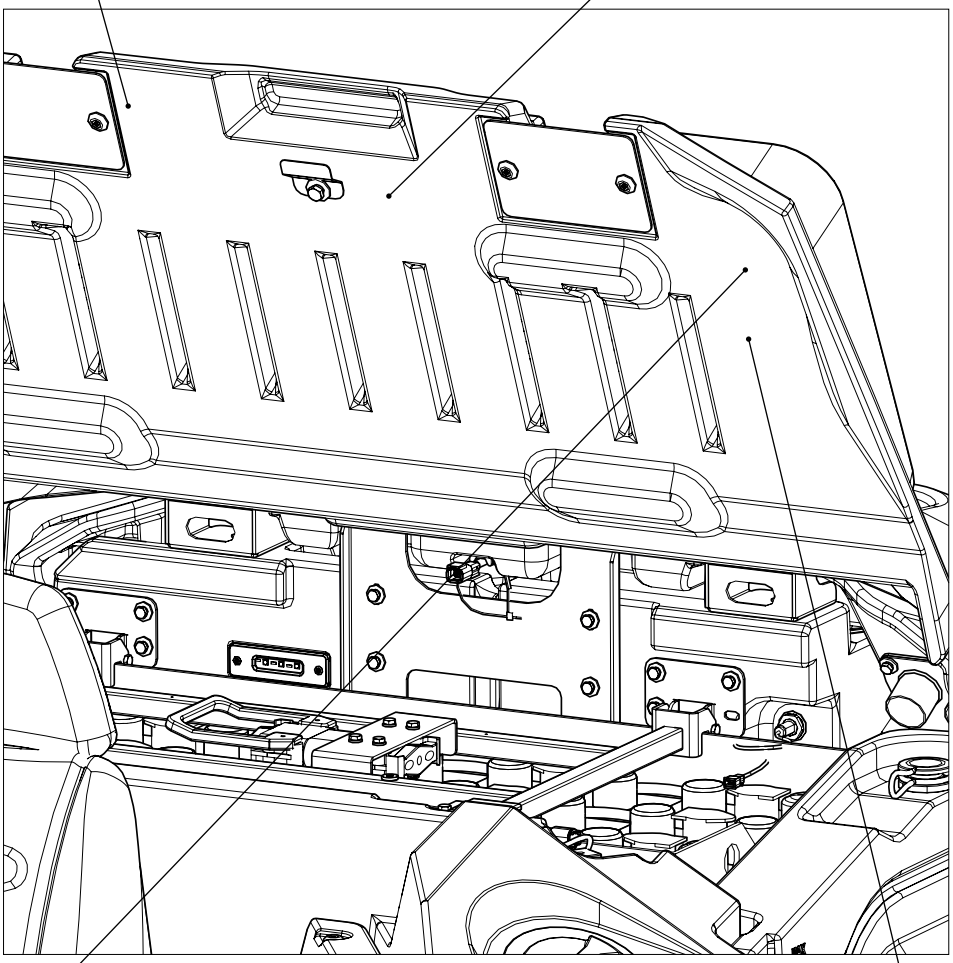



FSS system technical data label (FSS versions):
Applied to the inside of the battery box lid to indicate the technical characteristics of the automatic chemical product dosing system (FSS system).



Warning label for the automatic chemical product dosing system (FSS versions):
Applied to the inside of the battery box lid to indicate the precautions to be taken when using the automatic chemical product dosing system (FSS system).



Treading ban label:
Applied to the lateral inspection doors to identify the surfaces that must not be trodden upon (risk of personal injury or damage to the machine)



Label indicating that touching the brush when moving is prohibited:
Applied to the left and right sides of the brush head to indicate the prohibition to place your hands in the vicinity of the brush head while the brush is in motion.

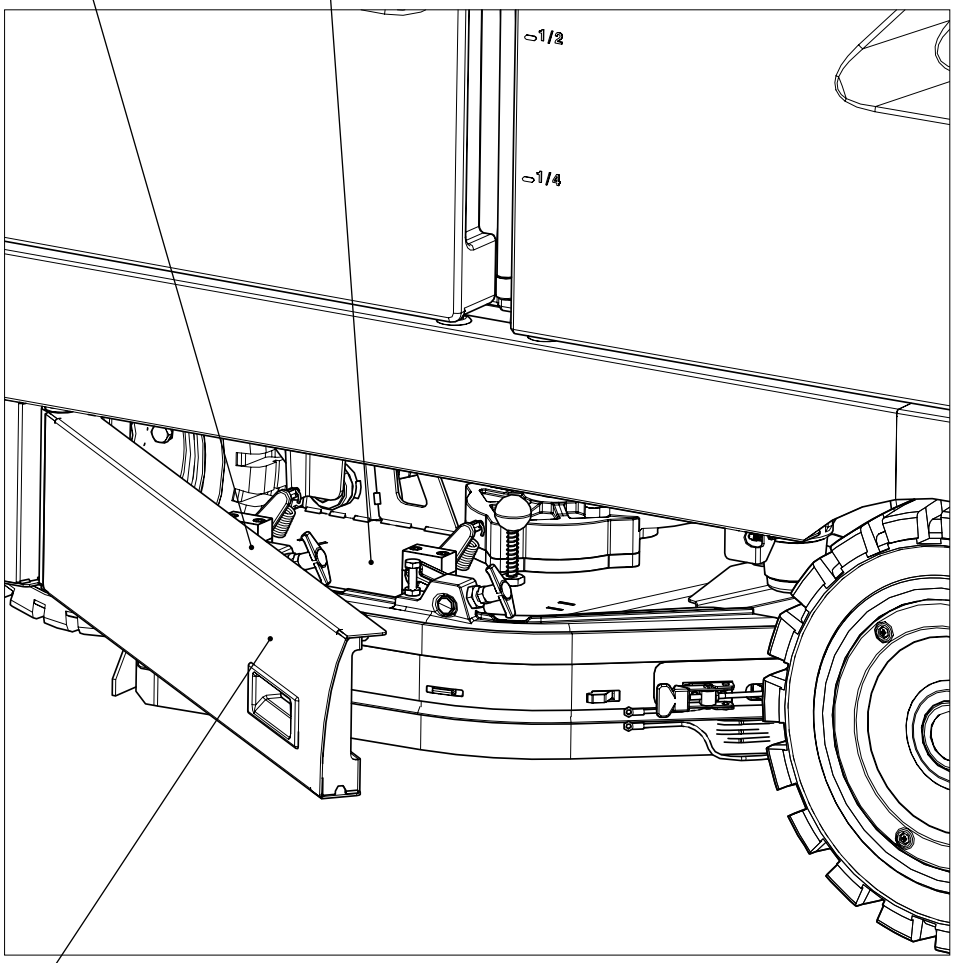



Water system filter maintenance warning label:
Applied to the left inspection panel to remind the operator of the need to perform maintenance upon the water system filter each time the machine is utilised.

	**Inspection footboard-recovery tank maintenance label:** Applied to the rear of the machine to indicate the footboard used to inspect and service the recovery tank.

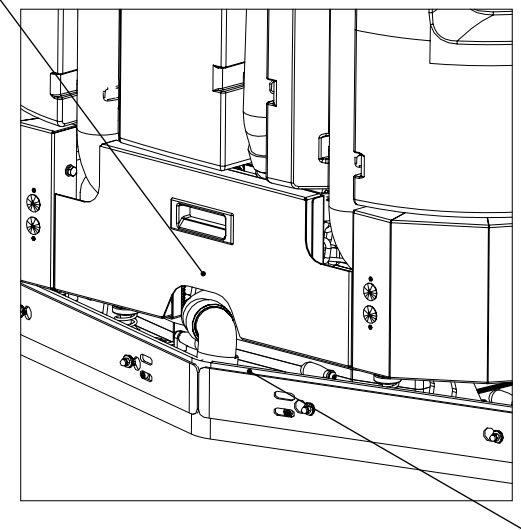

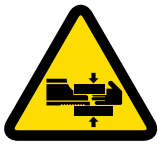	**Lower limb and hand crushing hazard label:** Applied at the rear of the machine to warn the user that there is a risk of crushing the lower limbs and hands when the squeegee is in motion.

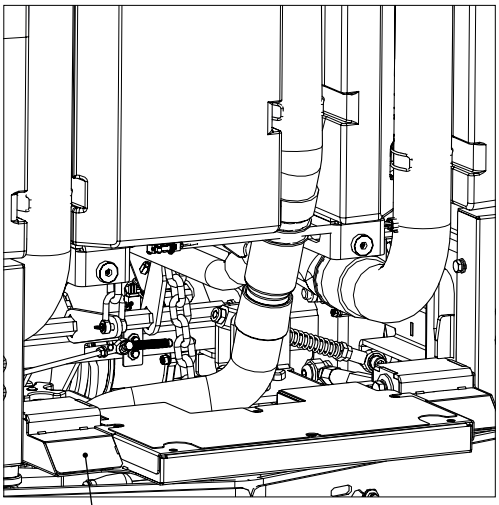

	**Label forbidding the use of the machine as a means of transport:** Applied to the rear of the machine to indicate that the recovery tank inspection footboard should not be used to transport people.

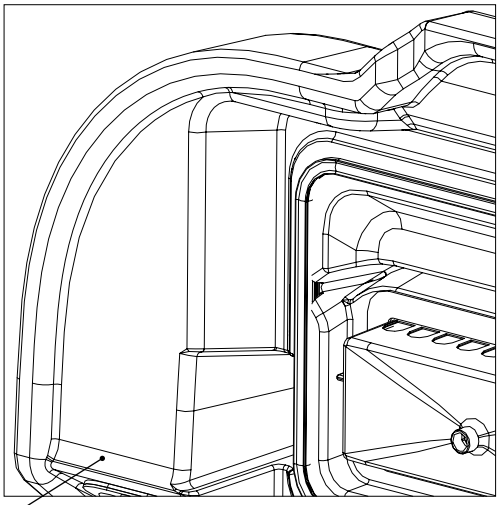

	**Suction motor filter maintenance label:** Applied to the inside of the recovery tank lid to remind the user to perform maintenance on the suction motor filter after every machine use, see “DAILY MAINTENANCE” on page 105.

	**Recovery tank drainage tube label:** Used on the rear of the machine, to identify the recovery tank emptying tube, see “DRAINING THE RECOVERY TANK” on page 116.

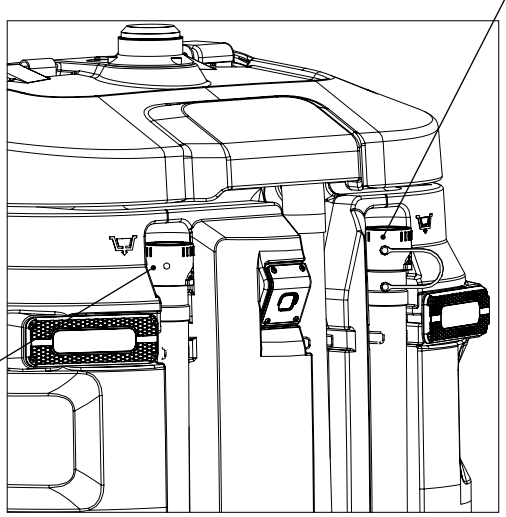

	**Solution tank drainage tube label:** Used on the rear of the machine, to identify the solution tank emptying tube, see “EMPTYING THE SOLUTION TANK” on page 118.

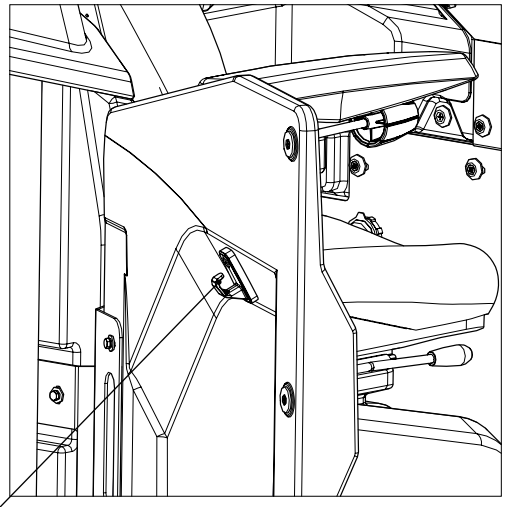



recovery tank spray cleaning gun label (optional):
Applied inside the right rear cover to indicate the support hook for the recovery tank cleaning gun, see “RECOVERY TANK SPRAY CLEANING GUN” on page 99.



Safety label on debris hopper lifting arms (combined version):
Used on the front right-hand side, adjacent to the debris hopper rotation fulcrum, to indicate the safety pin that must be used during maintenance.

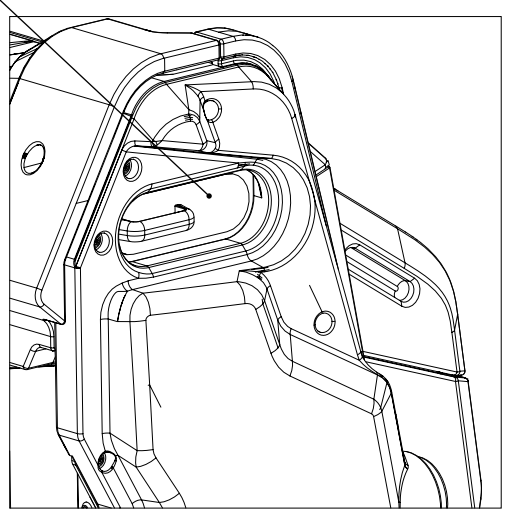

CONTROL STATION

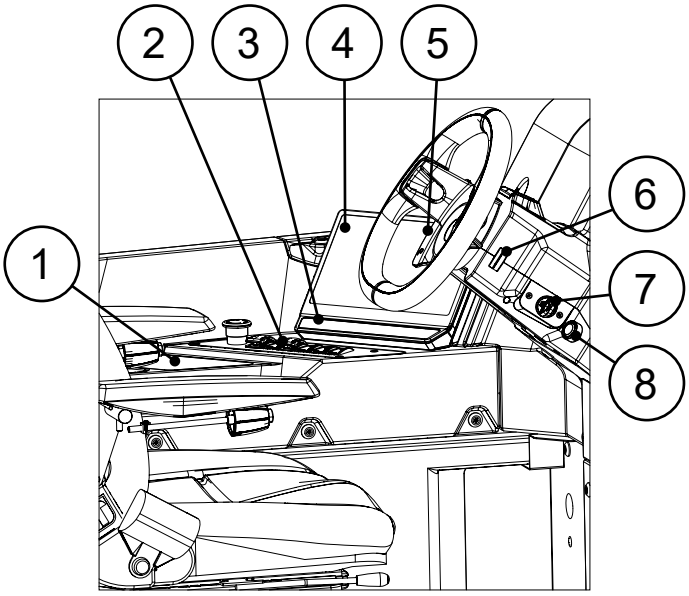

The machine has an easy and user-friendly control station, comprised of mainly the following:

1. Membrane panel for moving the debris hopper present on the combined machine version, see "MEMBRANE PUSH-BUTTON PANEL FOR MOVING THE DEBRIS HOPPER (COMBINED VERSION)" ON PAGE 29.
2. Push-button control panel, see "CONTROL PUSH-BUTTON PANEL" ON PAGE 30.
3. Membrane push-button panel for controlling sweeping unit, see "MEMBRANE PUSH-BUTTON PANEL FOR CONTROLLING BRUSHES (COMBINED VERSION)" ON PAGE 30.
4. Control display, see "CONTROL DISPLAY" ON PAGE 31.
5. Power mode work program control pad lever, see "POWER MODE WORKING PROGRAM" on page 64.
6. Reverse control pad lever, see "REVERSE GEAR" on page 89.
7. Machine main switch.
8. Operator presence button for moving the debris hopper.

MEMBRANE PUSH-BUTTON PANEL FOR MOVING THE DEBRIS HOPPER (COMBINED VERSION)

The membrane push-button panel on the left-hand side of the control station can be used to control the movement of the debris hopper and the filter-shaker in the suction system.

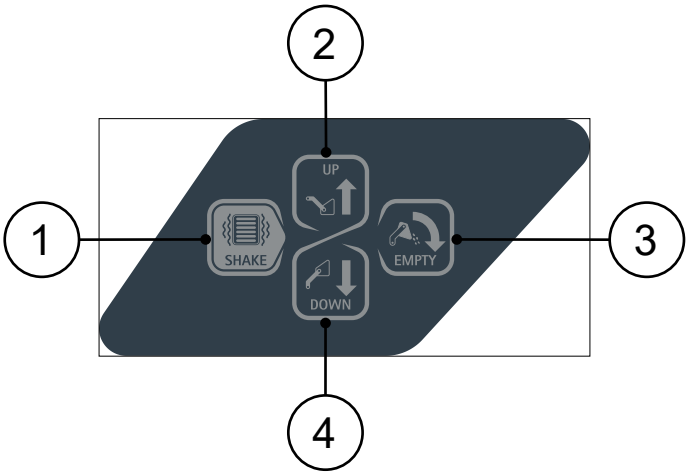

The membrane push-button panel is divided as follows:

1. Filter-shaker activation button.
2. Debris hopper (upwards) movement activation button.
3. Debris hopper rotation activation button.
4. Debris hopper (downwards) movement activation button.

CONTROL PUSH-BUTTON PANEL

With the control panel, located on the left of the control station, it is possible to activate the optional machine functions, thereby increasing productivity and reducing costs.

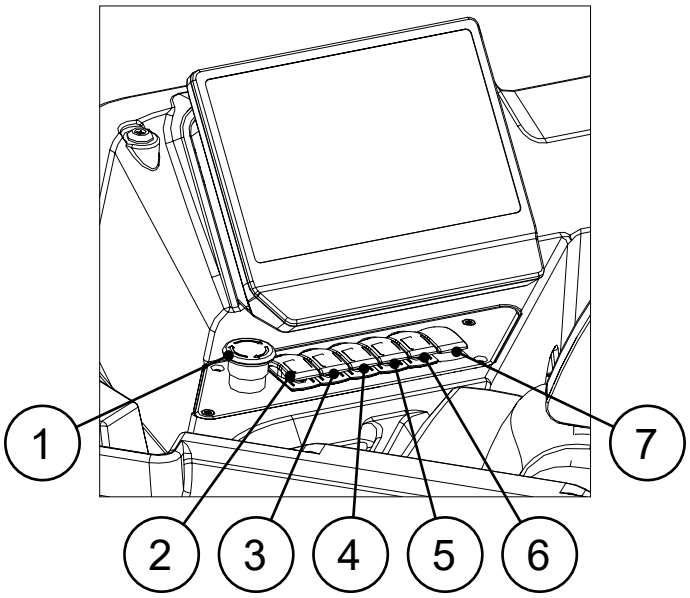

The control panel is divided as follows:

1. Emergency switch, see “EMERGENCY BUTTON” on page 88.
2. MAINTENANCE function control switch - see “MAINTENANCE POSITION FUNCTION” on page 85 or commands the BRUSH UNCOUPLING function - see “BRUSH UNCOUPLING FUNCTION (DISCOID SCRUBBING VERSION)” on page 86.
3. Working headlights activation switch, see “WORKING HEADLIGHTS” on page 91.
4. For the discoid scrubbing versions, corresponds to the control switch of the side scrubbing brush, see “SIDE BRUSH (DISCOID SCRUBBING VERSION)” on page 95, while for the cylindrical scrubbing versions, corresponds to the control switch of the side brush, see “SIDE BRUSH (CYLINDRICAL SCRUBBING VERSION)” on page 96.
5. Detergent automatic dosing system command switch, see “AUTOMATIC DETERGENT DOSING SYSTEM” on page 98, or in the case of the detergent solution continuous recycling system control switch, see “CONTINUOUS RECYCLING SYSTEM” on page 97.
6. Recovery tank cleaning system control switch, see “RECOVERY TANK SPRAY CLEANING GUN” on page 99.
7. Liquid vacuum wand system control switch, see “LIQUID VACUUM WAND” on page 101.

MEMBRANE PUSH-BUTTON PANEL FOR CONTROLLING BRUSHES (COMBINED VERSION)

The membrane push-button panel at the bottom of the control display (scrubbing version) can be used to control the sweeping system and the vacuum system.

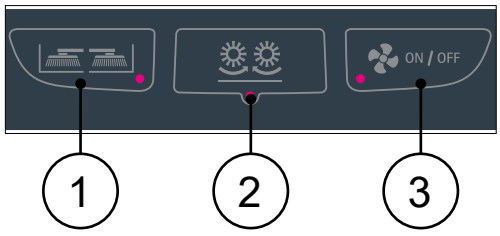

The membrane push-button panel is divided as follows:

1. Side brush control button, see “SIDE BRUSH (COMBINED VERSION)” on page 90.
2. Central brush control button, see “SWEEPING WORKING MODE (COMBINED VERSION)” on page 73.
3. Suction control button, see “SWEEPING WORKING MODE (COMBINED VERSION)” on page 73.

CONTROL DISPLAY

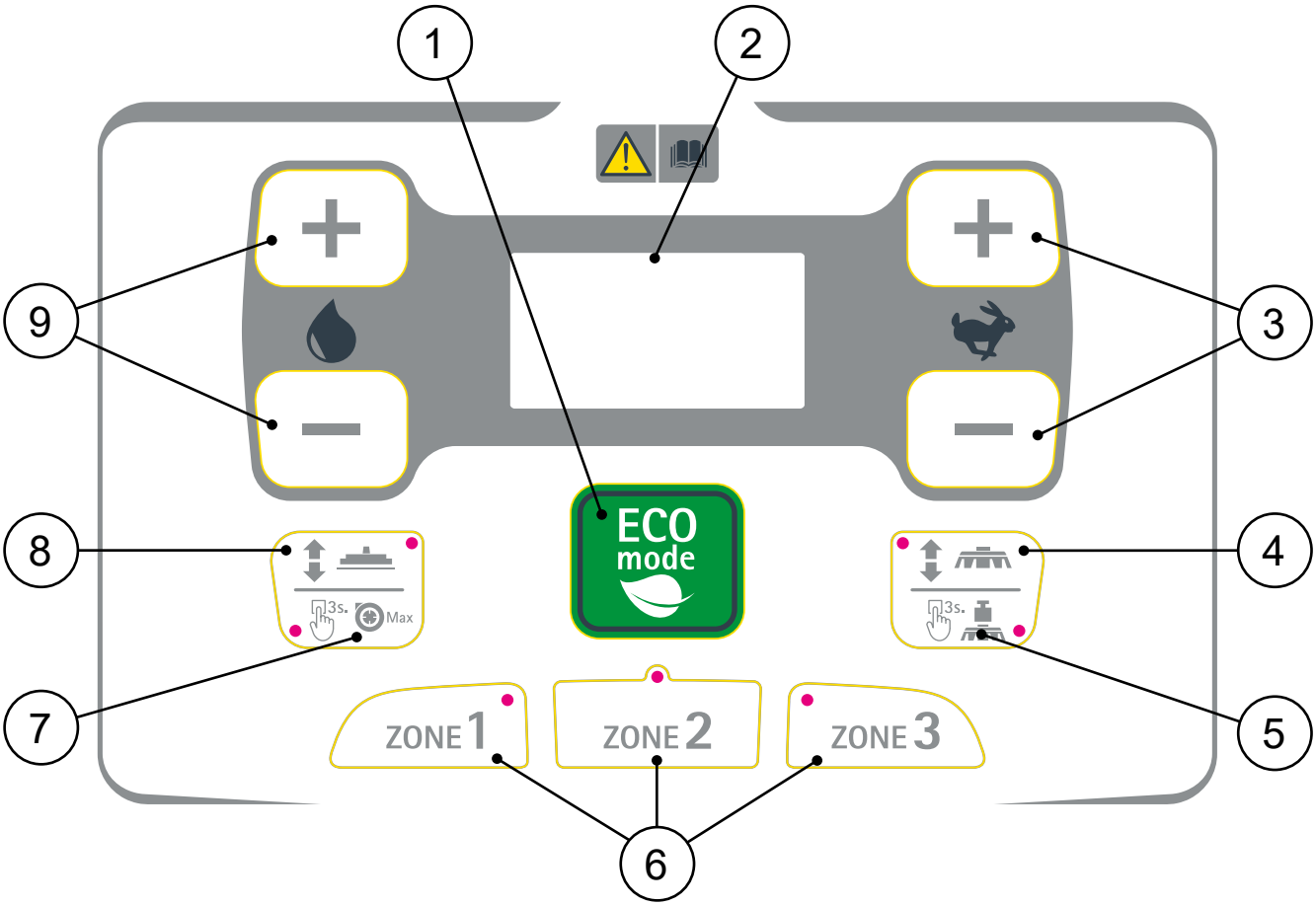

The control display consists of the following:

1. ECO MODE working program control button, see “ECO MODE WORKING PROGRAM” on page 63.
2. Control display.
3. Forward speed performance adjustment buttons, see “REGULATING THE FORWARD SPEED” on page 83.
4. Brush head control button.
5. Scrubbing brush head extra-pressure function control button, see “EXTRA BRUSH HEAD PRESSURE” on page 84.
6. Work zone control buttons, see “PROGRAM ZONE WORKING PROGRAM” on page 65.
7. Squeegee noiseless suction function control button, see “NOISELESS SUCTION” on page 85.
8. Squeegee control button.
9. Detergent solution performance adjustment buttons, see “ADJUSTMENT OF THE DETERGENT SOLUTION FLOW” on page 83.

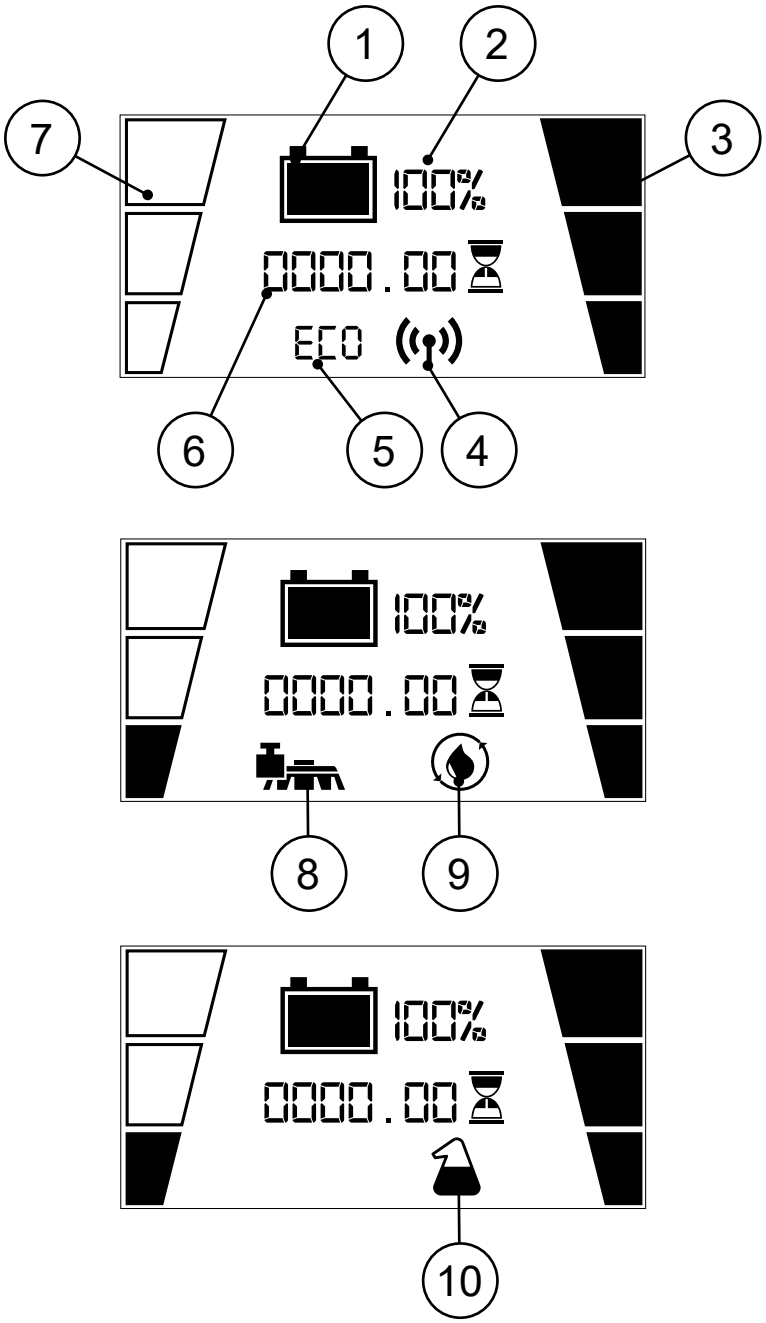

The control display consists of the following:

1. Graphic symbol used to identify the residual battery charge, see "BATTERY BOX CHARGE LEVEL INDICATOR" on page 79.
2. Numeric symbol that identifies the percentage of remaining battery charge, see "BATTERY BOX CHARGE LEVEL INDICATOR" on page 79.
3. Graphic symbol used to identify the forward speed performance level, see "REGULATING THE FORWARD SPEED" on page 83.
4. Graphic symbol used to identify that the automatic fleet management system is connected to the data exchange network, see "TAG INSERTION" on page 93.
5. Graphic symbol used to indicate that the "ECO" working program is active, see "ECO MODE WORKING PROGRAM" on page 63.
6. Numeric symbol used to identify the machine hour meter, see "HOUR METER" on page 79.
7. Graphic symbol used to indicate the detergent solution performance level, see "ADJUSTMENT OF THE DETERGENT SOLUTION FLOW" on page 83.
8. Graphic symbol used to indicate that the "POWER MODE" working program is active, see "POWER MODE WORKING PROGRAM" on page 64.
9. Graphic symbol used to indicate that the detergent solution recirculation system is active, see "CONTINUOUS RECYCLING SYSTEM" on page 97.
10. Graphic symbol used to indicate that the automatic detergent dosing system is active, see "AUTOMATIC DETERGENT DOSING SYSTEM" on page 98.

PREPARATION OF MACHINE

HANDLING THE PACKAGED MACHINE

The overall dimensions of the entire package are:

DIMENSIONS	GMG B	GMG BS	GMG BC
Length (cm)	240	240	310
Width (cm)	150	150	165
Height (cm)	190	190	190
Weight (kg/l)	1110	1170	1690

N.B.: it is recommended that all the packaging components be kept for any future machine transportation.

DANGER: Move the packaged product with handling trolleys that comply with legal requirements regarding size and mass of the packaging.

HOW TO UNPACK THE MACHINE

The machine is shipped in specific packaging. To remove it, proceed as follows:

1. Place the lower part of the outer packaging in contact with the floor.

N.B.: use the pictograms printed on the box as a reference.

2. Remove the outer package.

WARNING: the machine is contained in specific packaging materials, whose elements (plastic bags, staples, etc.) can pose potential hazards, and must not be left within reach of children, disabled persons, etc.

3. Remove the boxes containing the disc brushes and squeegee body from the machine.

CAUTION: it is recommended to wear the appropriate PPE (Personal Protective Equipment), suitable for the work to be carried out.

4. Place a descent ramp at the rear of the machine.

WARNING: the descent ramp must have an inclination and a capacity such as not to damage the machine or be damaged during the transit of the machine, contact the FIMAP service centre technician to obtain the net weight of the machine.

5. The machine is secured to the footboard with wedges that lock the wheels; remove these wedges.
6. Check the main switch is on “0". If it isn't, make a quarter turn anti-clockwise with the key (1) (**Fig.1**).
7. Remove the key from the instrument panel.
8. Position yourself to the side of the machine, grasp the handle (2) and turn the battery compartment lid (3) to its maintenance position (**Fig.2**).

ATTENTION: to prevent the lid from turning, insert the retainer (4) into the slot (5) (**Fig.3**).

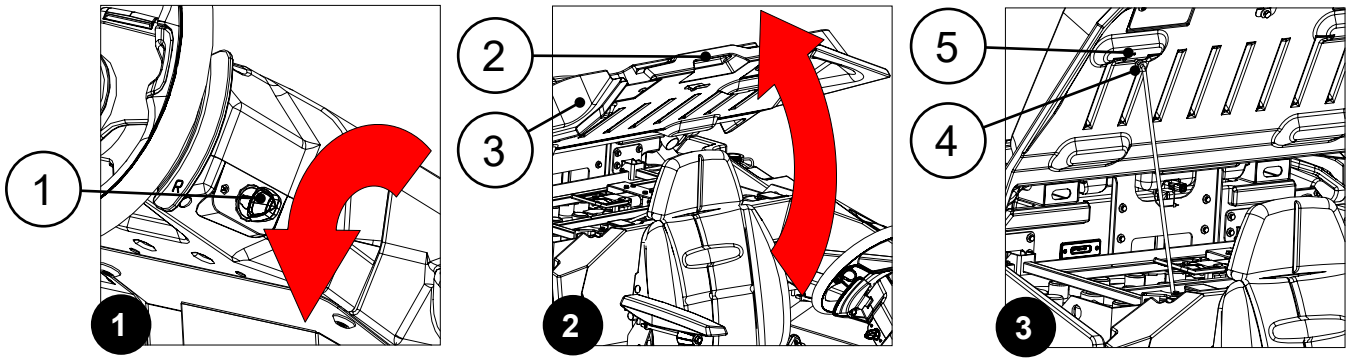

ATTENTION: the following operations must be carried out by qualified personnel. An incorrect connection of the connector may cause a malfunction of the device.

9. Connect the connector of the battery pad trolley to the machine's main system connector.
10. Grasp the battery compartment lid and turn it to its working position.

N.B.: release the retainer before turning the lid.

11. Sit on the driver's seat.
12. Insert the key (1) in the main switch (2) on the instrument panel (**Fig.4**).
13. Bring the main switch to position "I" by turning the key (1) a quarter turn clockwise (**Fig.5**).

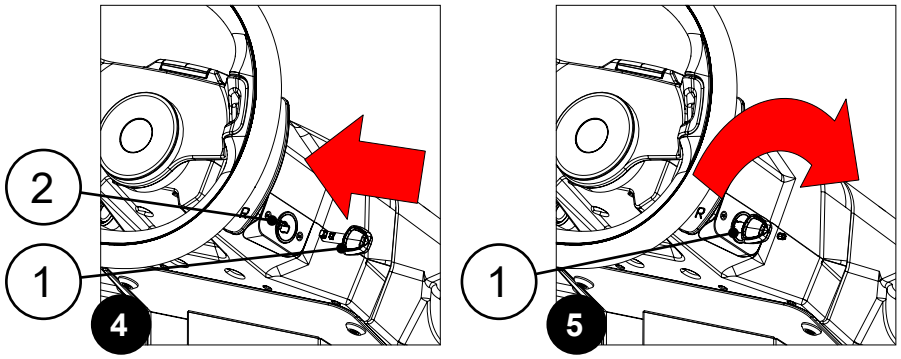

14. Make sure that the brush head is in the rest position; if this is not the case, press the button (6) on the control panel (**Fig.6**).

N.B.: when the brush head is in the rest position, the LED (7) on the button (6) is off.

15. Make sure that the squeegee is in the rest position; if this is not the case, press the button (8) on the control panel (**Fig.7**).

N.B.: when the squeegee is in the rest position, the LED (9) on the button (8) is off.

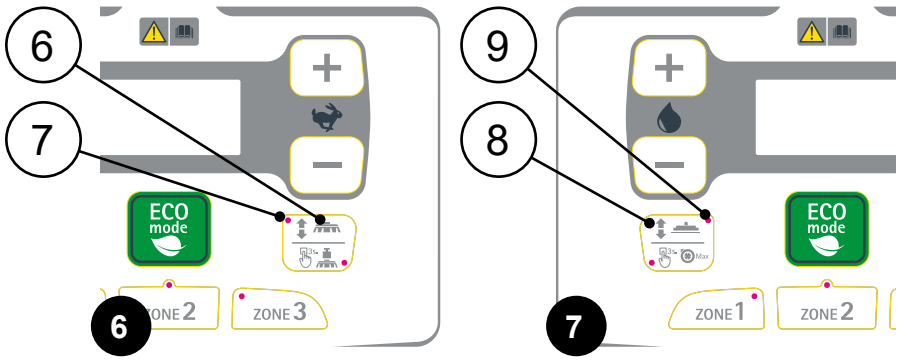

14. Engage the “REVERSE GEAR ACTIVATION/DEACTIVATION” lever (10) underneath the steering wheel (**Fig.8**).
15. Press the drive pedal (11) (**Fig.9**) to start the machine moving in reverse.

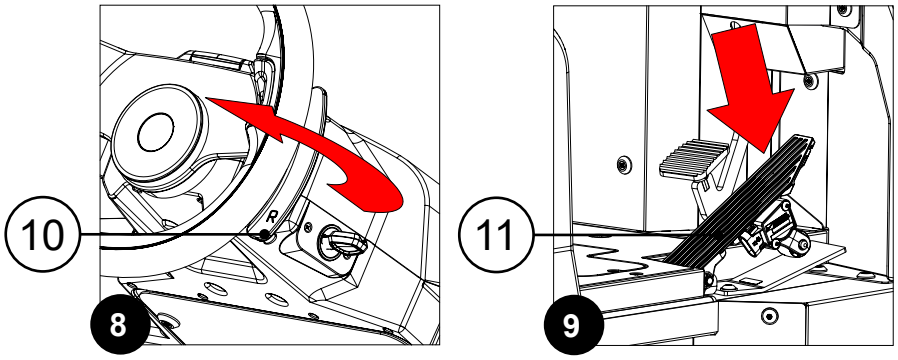

16. Drive the machine down the ramp.

ATTENTION: during this operation, check there are no people or objects near the machine.

17. Set the main switch to its “0" position, and turn the key (1) a quarter turn anti-clockwise (**Fig. 1**).
18. Remove the key from the instrument panel.
19. Position yourself to the side of the machine, grasp the handle (2) and turn the battery compartment lid (3) to its maintenance position (**Fig.2**).

ATTENTION: to prevent the lid from turning, insert the retainer (4) into the slot (5) (**Fig.3**).

ATTENTION: the following operations must be carried out by qualified personnel. An incorrect connection of the connector may cause a malfunction of the device.

20. Disconnect the backup battery trolley connector from the main machine system connector.
21. Grasp the battery compartment lid and turn it to its working position.

N.B.: release the retainer before turning the lid.

MACHINE SAFETY

To ensure that work is carried out in the best safety conditions, proceed as follows:

CAUTION: it is recommended to wear the appropriate PPE (Personal Protective Equipment), suitable for the work to be carried out.

1. Open the right inspection door (1) (**Fig.1**).
2. Check that the right gearmotor electric brake is activated. The lever (2) must not be in its locked position, otherwise, unlock it by pulling it towards you and moving it downwards (**Fig.2**).

DANGER: the electric brake is considered to be engaged when the hexagonal column (3) is free to move within the hole in the bracket (4) located in the frame (**Fig.3**).

DANGER: the electric brake is considered to be disengaged when the hexagonal column (3) is resting on the bracket (4) located in the frame (**Fig.3**).

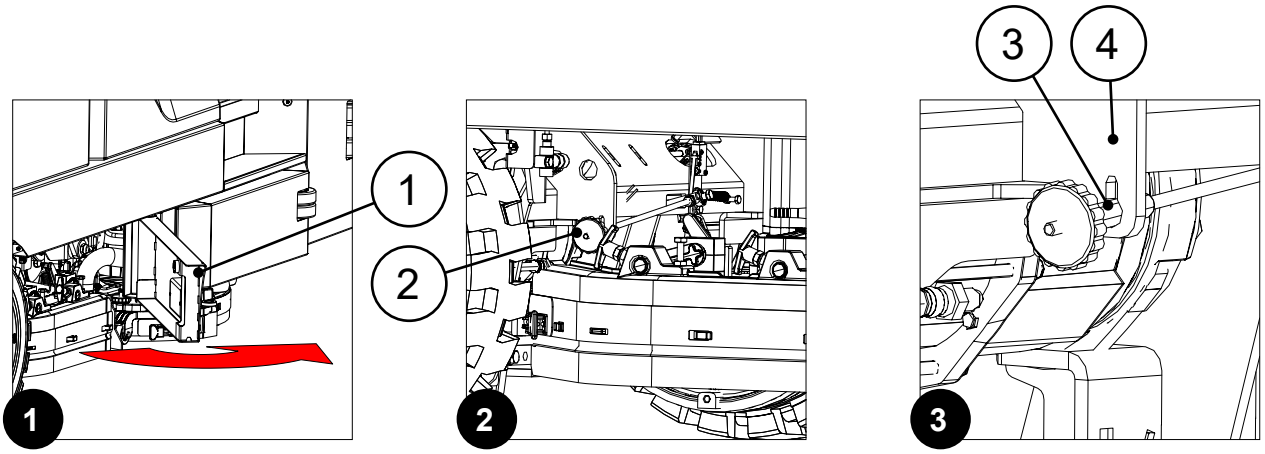

3. Check that also the right gearmotor electric brake is activated. The lever (2) must not be in its locked position, otherwise, unlock it by pulling it towards you and moving it downwards (**Fig.4**).
4. Make sure the solution tank is empty. If this is not the case, empty it. See "EMPTYING THE SOLUTION TANK" on page 118.
5. Make sure the recovery tank is empty. If this is not the case, empty it. See "DRAINING THE RECOVERY TANK" on page 116.
6. Sit on the driver's seat.
7. Insert the key (5) into the main switch on the right side of the steering column (**Fig.5**).
8. Set the main switch to "I" by turning the key a quarter turn clockwise (**Fig.5**).

ATTENTION: If the electric brake is not properly engaged, the alarm symbol will appear on the control display (**Fig. 6**) and will remain visible until all the electric brakes have been properly engaged.

N.B.: when the electric brake is deactivated, traction is inhibited.

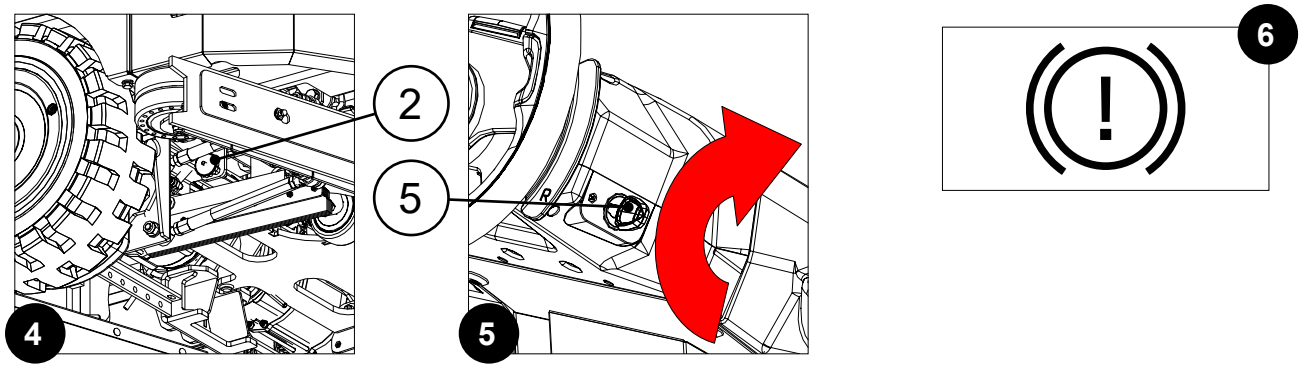

9. Make sure that the scrubbing head is in the rest position; if this is not the case, press the button (6) on the control panel (**Fig.7**).

N.B.: when the brush head is in the rest position, the LED (8) on the button (6) is off.

10. Make sure that the squeegee is in the rest position; if this is not the case, press the button (8) on the control panel (**Fig.8**).

N.B.: when the squeegee is in the rest position, the LED (9) on the button (8) is off.

11. If the machine is equipped with a scrubbing side brush, check that it is in the rest position; if this is not the case, press the SIDE BRUSH COMMAND switch (10); the switch is located on the control panel (**Fig.9**).

N.B.: when the brush head is in the rest position, the LED on the switch (10) is off.

12. If the machine is equipped with a sweeping side brush, check that it is in the rest position; if this is not the case, press the SIDE BRUSH COMMAND switch (10); the switch is located on the control panel (**Fig.9**), valid for cylindrical scrubbing versions.

N.B.: when the two side brush supports are in the rest position, the LED on the switch (10) is off.

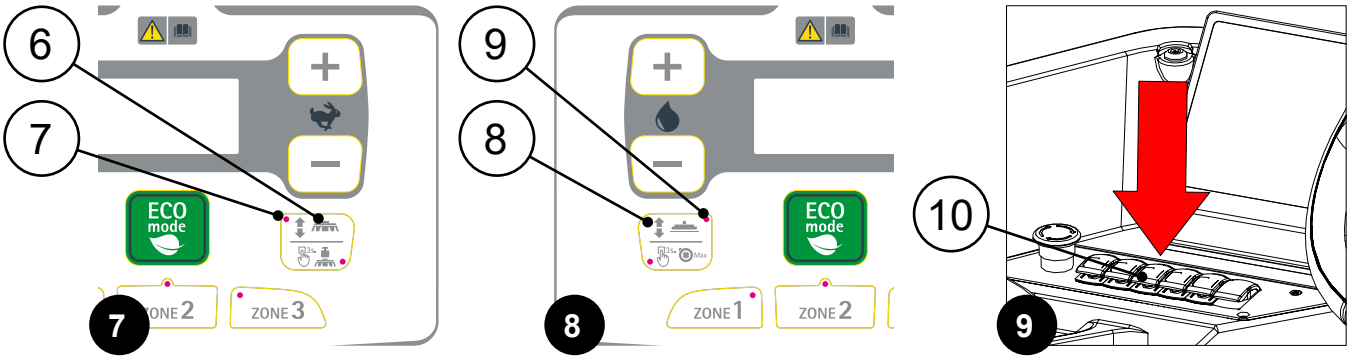

13. For combined machine versions, check that the sweeping brush head is in the rest position; if this is not the case, press the SWEEPING WORKING MODE button (11); the button is located on the brush control membrane push-button panel (**Fig.10**).

N.B.: when the two side brush supports are in the rest position, the LED on the button (11) is off.

14. Bring the main switch to the "0" position by making a quarter turn anti-clockwise with the key (5) (**Fig.11**).
15. Get off the machine.
16. Remove the key from the instrument panel.
17. Get off the machine.

CAUTION: do not position your foot above the side brush head carter while the machine is descending.

18. Grasp the handle (12) and turn the battery compartment cover (13) to its maintenance position (**Fig.12**).

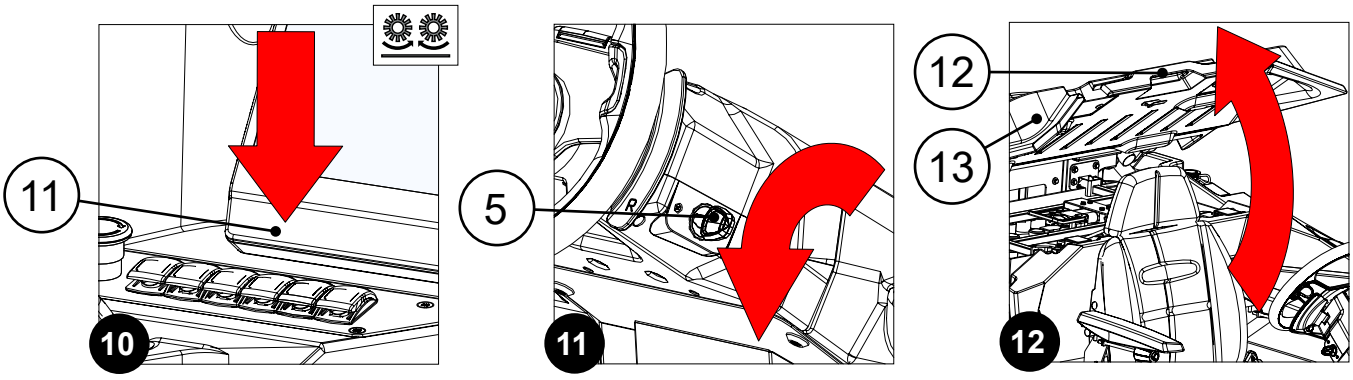

ATTENTION: to prevent the cover from turning, insert the retainer (14) into the slot (15) (**Fig.13**).

ATTENTION: the following operations must be carried out by qualified personnel. Incorrect operations could result in machine malfunctions.

19. Disconnect the machine's electrical system wiring connector (16) from the connector on the power cable coming from the battery box (**Fig. 14**).

20. Grasp the battery compartment lid and turn it to its working position.

N.B.: release the retainer before turning the lid.

21. Set the detergent solution flow to its OFF position by turning the lever (17) under the operator's seat clockwise (**Fig. 15**).

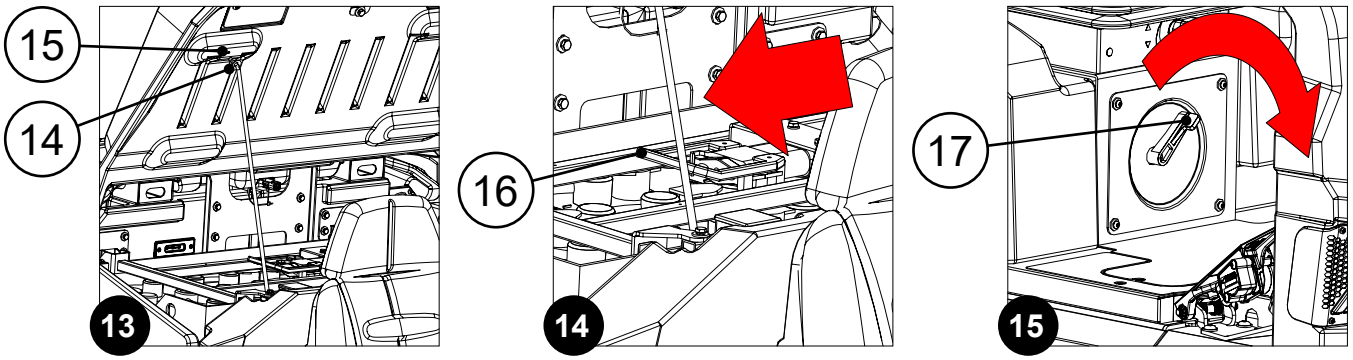

HOW TO MOVE THE MACHINE

The procedure for transporting the machine full safely is as follows:

CAUTION: it is recommended to wear the appropriate PPE (Personal Protective Equipment), suitable for the work to be carried out.

1. Open the right inspection door (1) (**Fig.1**).
2. Check that the right gearmotor electric brake is activated. The lever (2) must not be in its locked position, otherwise, unlock it by pulling it towards you and moving it downwards (**Fig.2**).

DANGER: the electric brake is considered to be engaged when the hexagonal column (3) is free to move within the hole in the bracket (4) located in the frame (**Fig.3**).

DANGER: the electric brake is considered to be disengaged when the hexagonal column (3) is resting on the bracket (4) located in the frame (**Fig.3**).

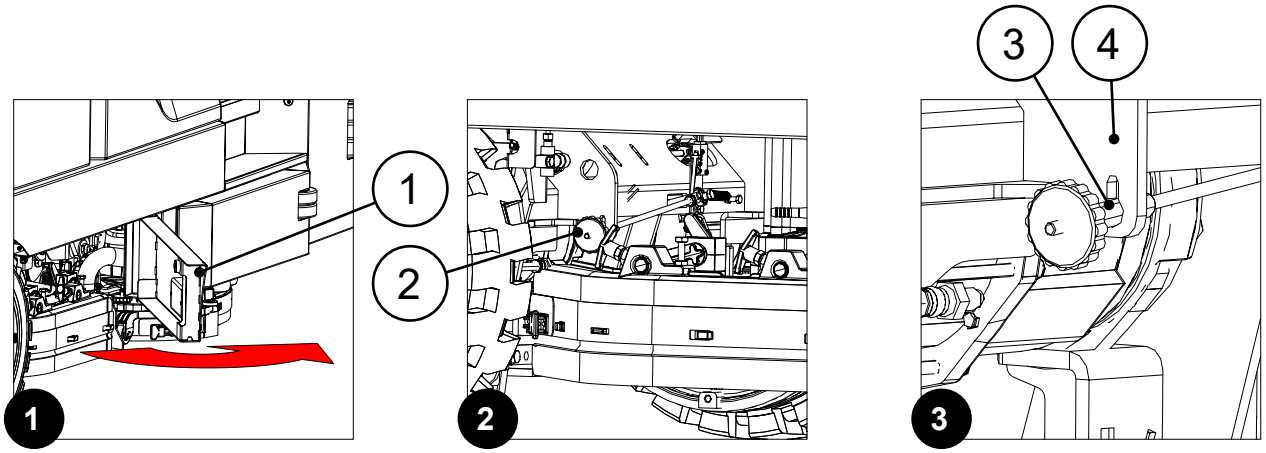

3. Check that also the right gearmotor electric brake is activated. The lever (2) must not be in its locked position, otherwise, unlock it by pulling it towards you and moving it downwards (**Fig.4**).
4. Make sure the solution tank is empty. If this is not the case, empty it. See “EMPTYING THE SOLUTION TANK” on page 118.
5. Make sure the recovery tank is empty. If this is not the case, empty it. See “DRAINING THE RECOVERY TANK” on page 116.

6. Sit on the driver's seat.
7. Insert the key (5) into the main switch on the right side of the steering column.
8. Set the main switch to "I" by turning the key a quarter turn clockwise (**Fig.5**).

ATTENTION: If the electric brake is not properly engaged, the alarm symbol will appear on the control display (**Fig. 6**) and will remain visible until all the electric brakes have been properly activated.

N.B.: when the electric brake is deactivated, traction is inhibited.

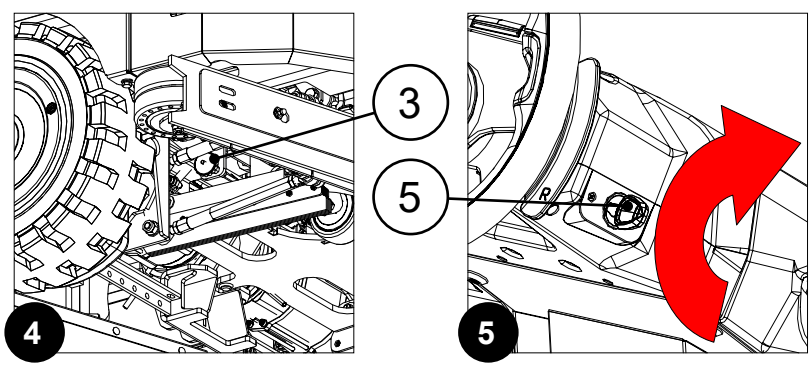

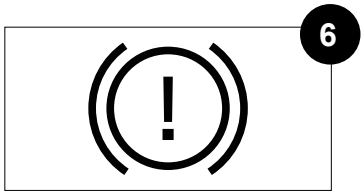

9. Make sure that the brush head is in the rest position; if this is not the case, press the button (6) on the control panel (**Fig.7**).

N.B.: when the brush head is in the rest position, the LED (7) on the button (6) is off.

10. Make sure that the squeegee is in the rest position; if this is not the case, press the button (8) on the control panel (**Fig.8**).

N.B.: when the squeegee is in the rest position, the LED (9) on the button (8) is off.

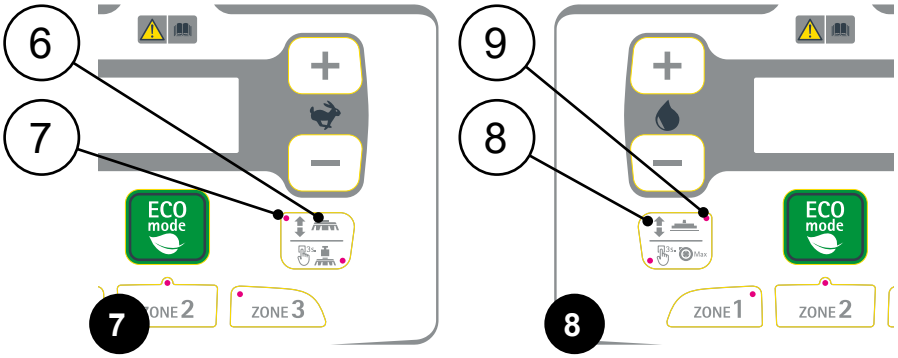

DANGER: before starting any activities, make sure that all the current transport safety regulations in the machine's country of use have been scrupulously respected.

1. Press the drive pedal (10) to begin moving the machine (**Fig.9**).
2. Use a ramp to move the machine up onto the transport vehicle.

CAUTION: during this operation, check there are no people or objects near the machine.

N.B.: the ramp gradient must not be such as to cause damage to the machine.

3. Position the machine on the means of transport. Set the main switch to position "0" by turning the key (5) a quarter turn anti-clockwise (**Fig.10**).
4. Remove the key from the main switch.

5. Get off the machine.

CAUTION: do not position your foot above the side brush head carter while the machine is descending.

6. Grasp the handle (11) and turn the battery compartment lid (12) to its maintenance position (**Fig.11**).

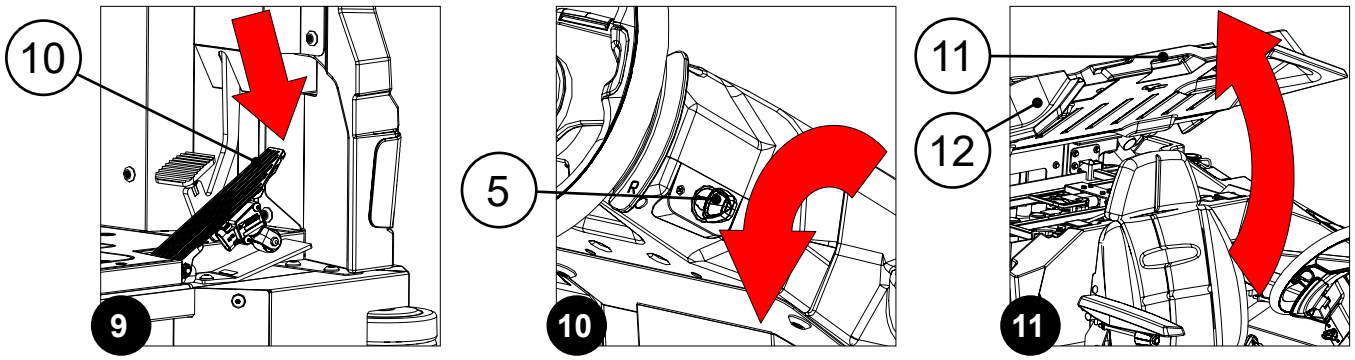

ATTENTION: to prevent the lid from turning, insert the retainer (13) into the slot (14) (**Fig.12**).

ATTENTION: the following operations must be carried out by qualified personnel. Incorrect operations could result in machine malfunctions.

7. Disconnect the machine's electrical system wiring connector (15) from the connector on the power cable coming from the battery box (**Fig. 13**).

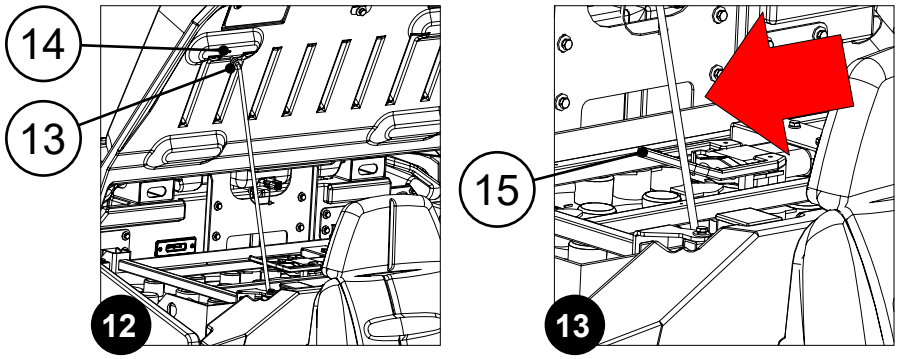

8. Grasp the battery compartment lid and turn it to its working position.

N.B.: release the retainer before turning the lid.

9. Secure the machine to the means of transport using an appropriate number and type of fastening elements, based on its weight and size.

CAUTION: secure the machine according to the directives in force in the country of use, so that it cannot slide or tip over.

N.B.: the anchor points to be used to safely secure the machine are indicated on the machine itself.

HOW TO MOVE THE MACHINE WITH THE TRACTION IN NEUTRAL

The phases for moving the machine with the traction system in neutral are as follows:

1. Perform all the operations required to secure the machine. See “MACHINE SAFETY” on page 35.
2. Open the right inspection door (1) (**Fig.1**).
3. Deactivate the right gearmotor electric brake, the lever (2) must be in its locked position, otherwise, lock it by pulling it towards you and moving it up (**Fig.2**).

DANGER: the electric brake is considered to be disengaged when the hexagonal column (3) is resting on the bracket (4) located in the frame (**Fig.3**).

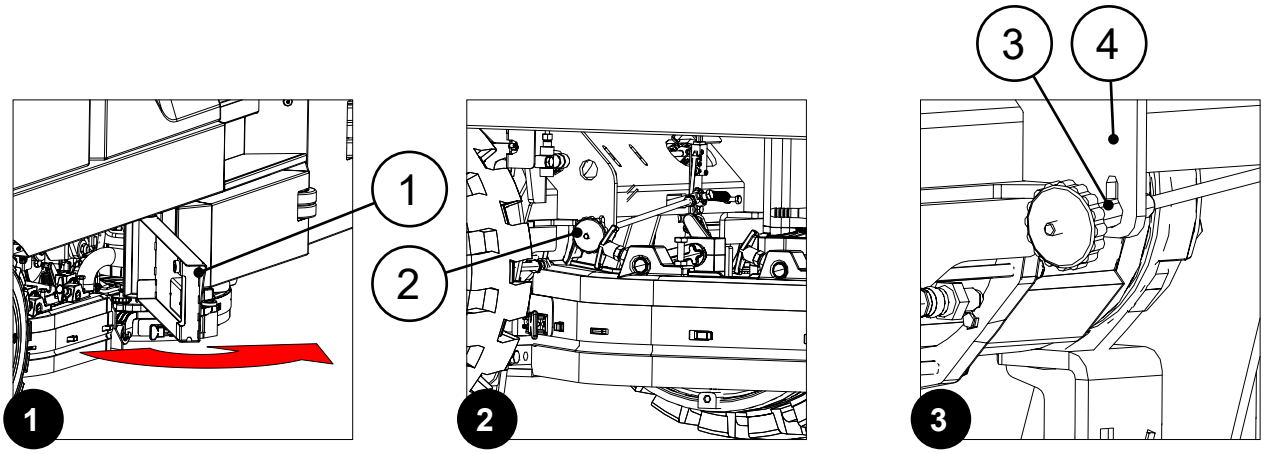

4. Deactivate the left gearmotor electric brake, the lever (2) must be in its locked position; otherwise, lock it by pulling it towards you and moving it up.

DANGER: the electric brake is considered to be disengaged when the hexagonal column (3) is resting on the bracket located in the frame (**Fig.3**).

5. Fix the machine to the drive elements.

CAUTION: Use the type of drive element most suitable for the machine weight, see the transport weight parameter in the TECHNICAL DATA table, see “TECHNICAL DATA” on page 15.

N.B.: the anchor points to be used to safely secure the machine are indicated on the machine itself.

TRACTION ELECTRIC BRAKE ACTIVATION

The phases for activating the traction electric brake are as follows:

CAUTION: it is recommended to wear the appropriate PPE (Personal Protective Equipment), suitable for the work to be carried out.

1. Open the right inspection door (1) (**Fig.1**).
2. Activate the right gearmotor electric brake, the lever (2) must not be in its locked position, otherwise, release it by pulling it towards you and moving it down (**Fig.2**).

DANGER: the electric brake is considered to be engaged when the hexagonal column (3) is free to move within the hole in the bracket (4) located in the frame (**Fig.3**).

DANGER: the electric brake is considered to be disengaged when the hexagonal column (3) is resting on the bracket (4) located in the frame (**Fig.3**).

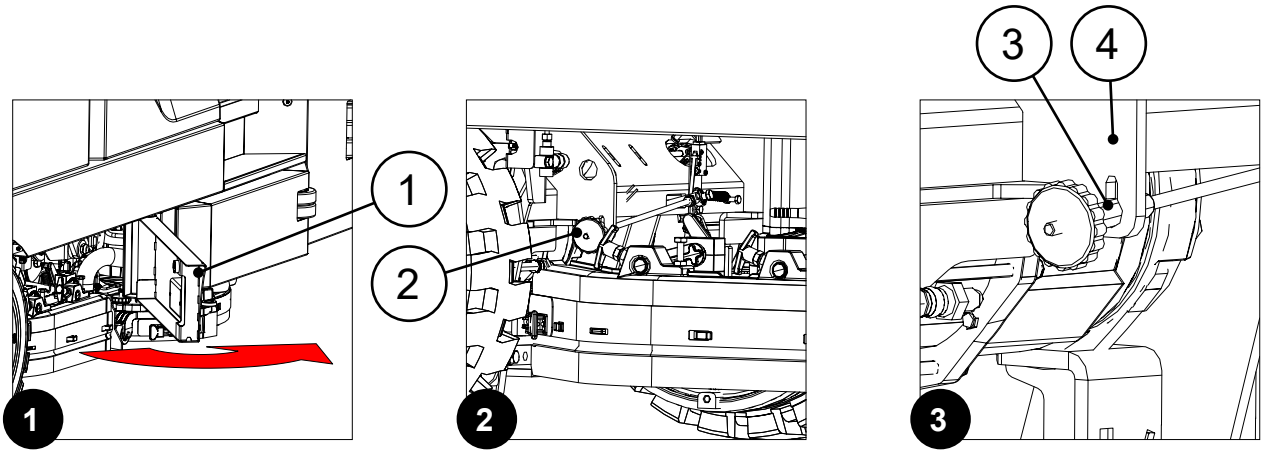

3. Close the left inspection door (1).
4. Activate the left gearmotor electric brake, the lever (2) must not be in its locked position, otherwise, release it by pulling it towards you and moving it down (**Fig.4**).

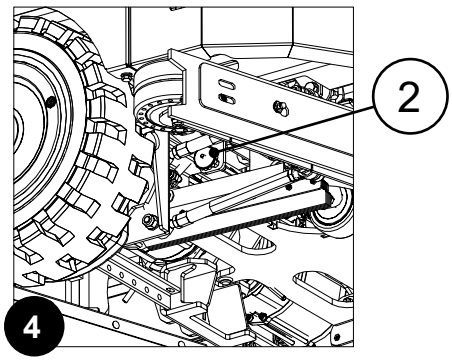

TYPE OF BATTERY PACK TO BE USED

Type	Voltage (V)	Work (Ah_{C5})
traditional lead	36	775
pure lead	36	500
lithium	36	720

To ensure good working performance, the machine must receive 36V of power via a dedicated box; the three types of power supply boxes that FIMAP offers its customers are shown here to the side. FIMAP recommends the use of conventional lead-acid box batteries, 36V 775 Ah_{C5}.

The dimensions of the battery holder compartment are: 930x800x430 mm (length x height x width).

N.B.: the function board in the machine is programmed by the factory to work with the following type of battery: 36Pb80. To change this, see "MODIFICARE LA TIPOLOGIA DI BATTERIA DI ALIMENTAZIONE MACCHINA" on page 11 in the "OPERATOR INTERFACE CONFIGURATION MANUAL" delivered with the machine documentation.

BATTERY BOX MAINTENANCE AND DISPOSAL

For battery box maintenance and recharging, follow the instructions contained in the document provided by the battery manufacturer.
When the battery box is dead, it must be disconnected by a technician from a FIMAP service centre; using a suitable lifting device, remove the battery box from the machine and take it to a suitable disposal centre.

N.B.: used batteries, which are classified as hazardous waste, must be returned to a legally authorised waste disposal authority.

INSERTING THE BATTERY BOX IN THE MACHINE

To insert the battery box in the machine, contact a FIMAP service centre technician.

WARNING: FIMAP declines all responsibility for any damage to property or injury persons in the event that the batteries are replaced by an unauthorized technician.

RECHARGING THE BATTERY BOX

The battery box must be charged prior to first use and whenever it no longer provides sufficient power to perform the desired work activities.

WARNING: by default the function board present in the machine is set for a Pb80 type battery, contact a FIMAP service centre to make the change.

N.B.: Carefully read the User and Maintenance Manual for the battery box you wish to use before charging.

1. Bring the machine to the battery recharging area.

ATTENTION: Park the machine in an enclosed place, on a flat and level surface; near the machine there must be no objects that could either damage it, or be damaged through contact with it.

ATTENTION: the room where the batteries are recharged must be adequately ventilated to prevent the accumulation of gases that leak from batteries.

WARNING: the place designated for this operation must comply with current regulations concerning safety at work and current environmental protection regulations.

CAUTION: it is recommended to wear the appropriate PPE (Personal Protective Equipment), suitable for the work to be carried out.

2. Perform all the operations required to secure the machine. See “MACHINE SAFETY” on page 35.
3. Position yourself to the side of the machine, grasp the handle (1) and turn the battery compartment lid (2) to its service position (**Fig.1**).

ATTENTION: to prevent the lid from turning, insert the retainer (3) into the slot (4) (**Fig.2**).

ATTENTION: the following operations must be carried out by qualified personnel. An incorrect connection of the connector may cause a malfunction of the device.

4. Connect the battery charger cable connector (5) to the connector on the power cable coming from the battery box (**Fig.3**).

N.B.: The battery charger coupling connector comes inside the bag containing this instruction booklet, and must be assembled on the battery charger cables as indicated in the instructions.

WARNING: before connecting the battery box to the battery charger, make sure it is suitable for the battery box you want to charge.

N.B.: carefully read the user and maintenance instructions for the battery charger to be used for charging.

CAUTION: keep the battery compartment lid open for the entire duration of the battery box recharging cycle in order to allow any fumes to escape.

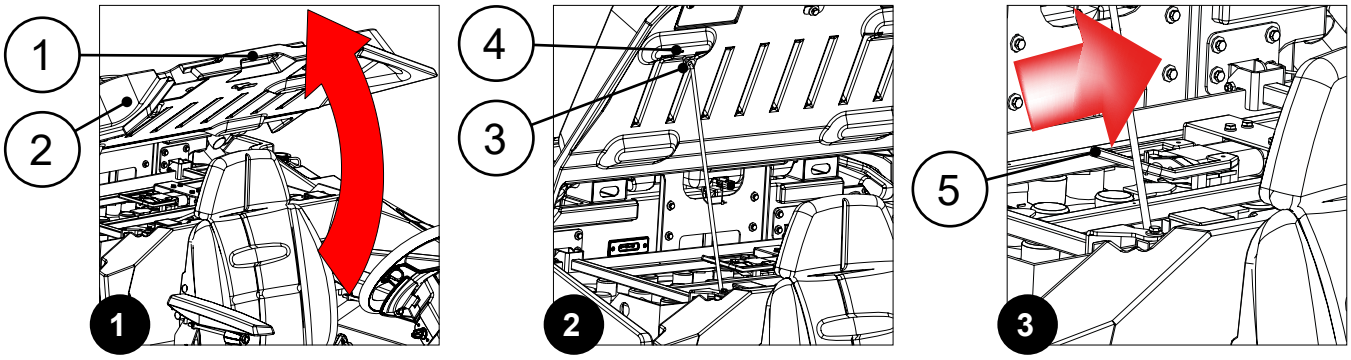

5. Connect the battery charger cable to the power supply socket.
6. Once the charging cycle has been completed, disconnect the battery charger cable connector (5) from the connector on the power cable coming from the battery box.
7. Connect the connector on the machine's electrical system wiring to the connector on the power cable coming from the battery box.
8. Grasp the battery compartment lid and turn it to its working position.

N.B.: release the retainer before turning the lid.

ADJUSTMENT OF THE DRIVER'S SEAT (STANDARD SEAT)

The proper adjustment of the driving position provides a greater sense of comfort when using the machine.

CORRECT POSITION ON THE SEAT: make sure you sit upright and that your back and that your lower back and spine are at 90°.

LONGITUDINAL SEAT ADJUSTMENT: The seat should always be positioned using the pedals as a reference. To adjust the seat, use the lever located under it.

N.B.: the distance should be adjusted so that the knees are slightly bent (about 120°) when the pedals are fully pressed to the floor.

N.B.: adjust the distance of the seat so that the brake pedal reaches the end of its stroke when pressed.

N.B.: your feet should be positioned keeping your heels on the footboard; the pedals should be pressed using the part of the foot directly behind your toes.

N.B.: the ideal position is that which allows you to grip the steering wheel correctly with the palms of your hands slightly below shoulder level. With a good grip on the steering wheel, the elbows should be bent by about 120°. They should be at least 30 cm between the middle of the steering wheel and our breastbone. In any case, this distance should be no more than 45 cm.

ADJUSTING THE ARMRESTS (OPTIONAL): the armrests should be inclined to make using the machine comfortable.

N.B.: to adjust the armrest, use the runner located under it.

N.B.: taking the right armrest as a reference, if the wheel is turned outwards the inclination of the armrest is increased. Taking the left armrest as a reference, if the wheel is turned inwards the inclination of the armrest is increased.

WEARING THE SAFETY BELT (OPTIONAL) CORRECTLY: the machine comes equipped with a sub-abdominal safety device, which allows the operator to remain anchored to the driver's seat. To secure the safety belt, you must first be sitting in the driver's seat; take the mobile part of the belt, wrap it round the abdomen and insert the mobile part in the slit in the fixed part.

N.B.: adjust the horizontal part of the belt so it is as tight as possible around the pelvis. The belt should be pulled and put as low as possible on the pelvis bone, and not on the belly.

ADJUSTMENT OF THE DRIVER'S SEAT (COMFORT SEAT)

When adjusting the driver's seat with the comfort seat, follow the instructions in the document provided by the seat manufacturer.

INSERTING WATER SYSTEM FILTER

Before using the machine for the first time the water system filter needs to be reset, for shipping reasons the filter cartridge and the cap have been removed.
To insert the filter cartridge in the water system filter cap proceed as follows:

1. Take the machine to the maintenance area.
2. Perform all the operations required to secure the machine. See “MACHINE SAFETY” on page 35.

CAUTION: it is recommended to wear the appropriate PPE (Personal Protective Equipment), suitable for the work to be carried out.

3. Close the tap's outlet flow, and turn the lever (1) on the front of the driver's seat clockwise (**Fig.1**).
4. Stand on the left side of the machine.
5. Open the left lateral inspection door (2) (**Fig.2**).
6. Insert the filter cartridge (3) in the housing on the cap (4) (**Fig.3**).

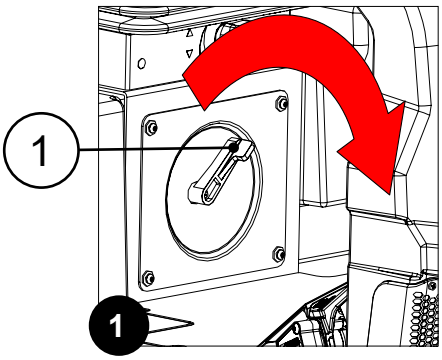

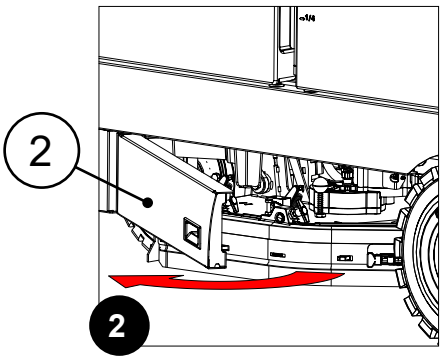

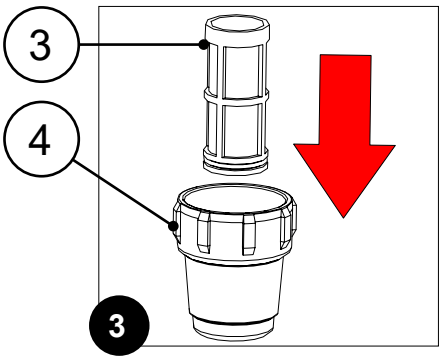

N.B.: The O-ring gasket in the filter cartridge should be inserted into its seat in the cap.

7. Screw the cap (4) onto the body of the detergent solution filter (**Fig.4**).

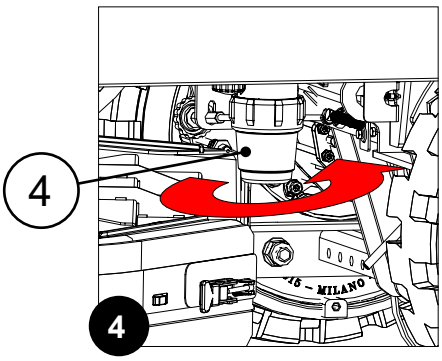

DETERGENT SOLUTION

Proceed as follows to fill the solution tank with water:

1. Take the machine to the usual place for filling the solution tank.
2. Perform all the operations required to secure the machine. See “MACHINE SAFETY” on page 35.

CAUTION: it is recommended to wear the appropriate PPE (Personal Protective Equipment), suitable for the work to be carried out.

3. Close the tap's outlet flow, and turn the lever (1) on the front of the driver's seat clockwise (**Fig.1**).
4. Open the left lateral inspection door (2) (**Fig.2**).
5. Make sure that the cap (3) on the water system filter body (4) is closed. If not, close it (**Fig.3**).

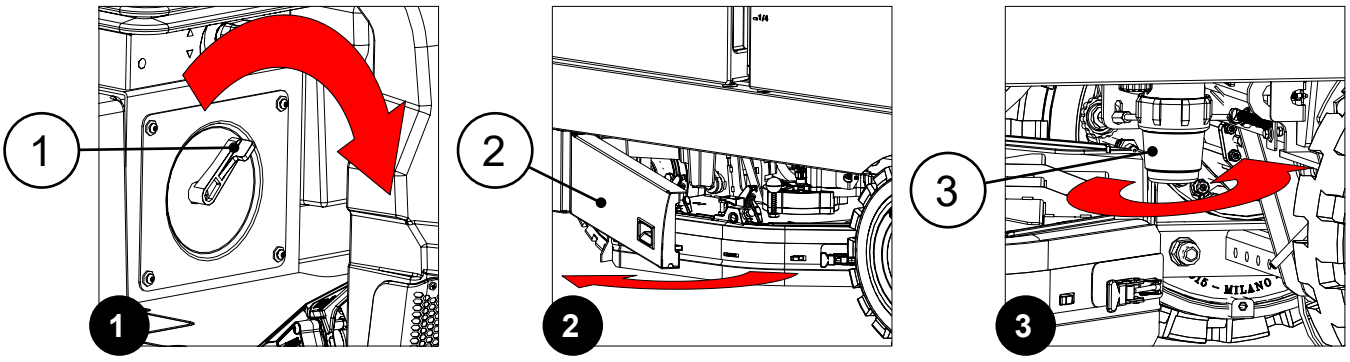

6. Close the left inspection door.
7. Remove the solution tank filler cap (5) (**Fig.4**).
8. Check that the filter (6) under the cap is positioned correctly (**Fig.5**) in order to prevent impurities and dirt from getting inside, which can cause the machine's water system to malfunction.
9. Fill the solution tank.

N.B.: the amount of solution inside the tank is indicated by the coloured ball inside the level tube (7) on the left-hand side of the machine (**Fig.6**).

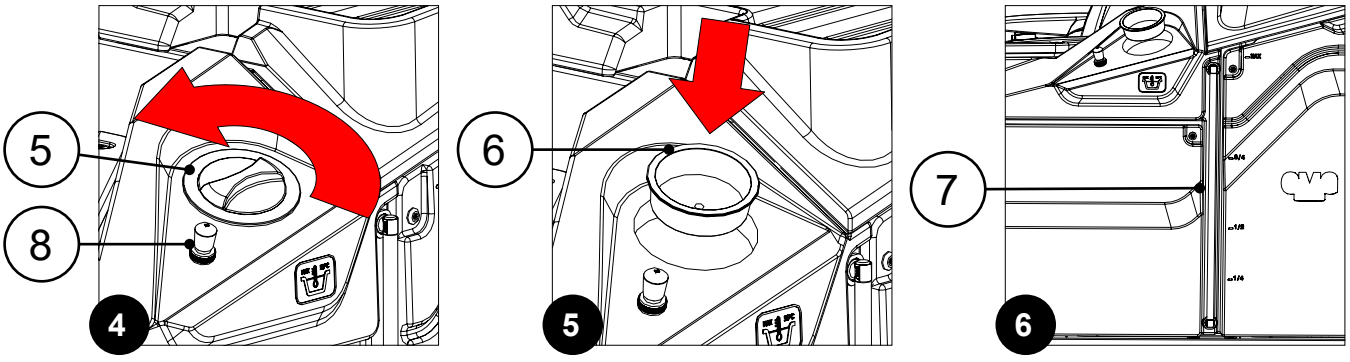

N.B.: the solution tank can also be filled with the quick-fill system (FFF). Simply connect the water hose to the quick-fit hose connector (8) on the machine (**Fig. 4**), and remember to remove the cap (5) to vent the air.

N.B.: fill with clean water, at a temperature no higher than 50°C (122°F) and no lower than 10°C (50°F).

For the versions without the automatic detergent dosing system (versions without FSS), after filling the solution tank with clean water, add the liquid detergent to the tank in the concentration and manner indicated on the detergent manufacturer's label.

N.B.: to prevent an excessive amount of foam from forming, which could damage the suction motor, use the minimum percentage of detergent required.

CAUTION: protective gloves should always be worn when handling detergents or acidic or alkaline solutions, to avoid serious hand injuries.

ATTENTION: always use detergents which have a manufacturer's label that indicates that they are suitable for use with floor scrubbing machines. Do not use acid or alkaline products or solvents without this indication.

ATTENTION: in order to avoid damaging the machine's water system, acidic or alkaline maintenance detergents can be used, as long as they have pH values between 4 and 10, and do not contain: oxidising agents, chlorine or bromine, formaldehyde, mineral solvents.

ATTENTION: Always use low-foam detergent. To avoid the production of foam, put a minimum quantity of antifoam liquid in the recovery tank before starting to clean. Do not use pure acids.

For versions with the automatic detergent dosing system (versions with the FSS system), fill the solution tank with clean water and then proceed as follows:

1. Perform all the operations required to secure the machine. See “MACHINE SAFETY” on page 35.

CAUTION: protective gloves should always be worn when handling detergents or acidic or alkaline solutions, to avoid serious hand injuries.

2. Grasp the handle (1) and turn the battery compartment cover (2) to the service position (**Fig.1**).

ATTENTION: to prevent the lid from turning, insert the retainer (3) into the slot (4) (**Fig.2**).

3. Remove the detergent tank cap (5) (**Fig.3**).
4. Fill the tank with the desired detergent. The amount present in the detergent tank is indicated by the two level bulbs (6) (**Fig.3**).

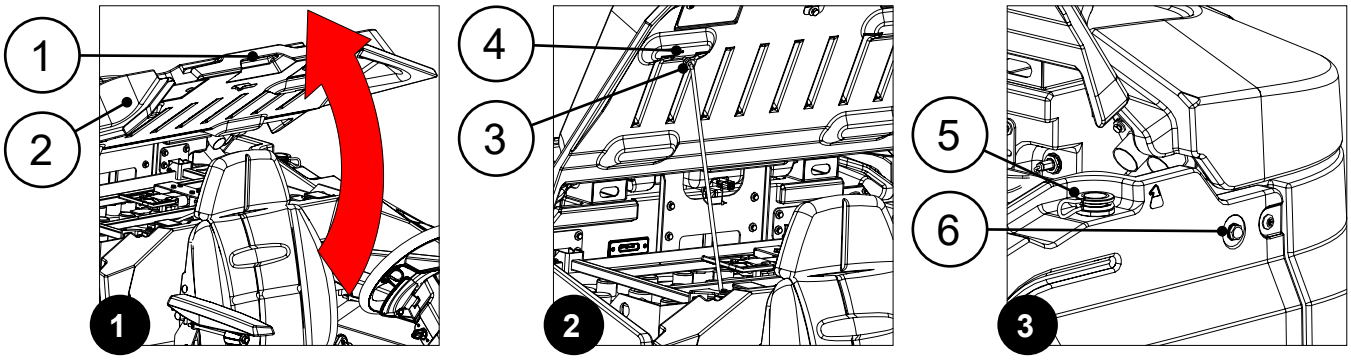

N.B.: The upper bulb indicates the detergent tank's maximum fill level; the lower bulb indicates the minimum level, below which the automatic system will not function properly.

ATTENTION: always use detergents which have a manufacturer's label that indicates that they are suitable for use with floor scrubbing machines. Do not use acid or alkaline products or solvents without this indication.

WARNING: the dosing system is particularly suitable for frequent maintenance cleaning operations. Acidic or alkaline maintenance detergents can be used, as long as they have pH values between 4 and 10, and do not contain: oxidising agents, chlorine or bromine, formaldehyde, mineral solvents.

N.B.: the detergents used must be suitable for use with scrubbing machines.

N.B.: wash the circuit with water after use if the system is not used daily. The system can be excluded.

N.B.: In case of sporadic use of detergents with pH between 1-3 or 11-14, use the floor scrubbing machine in the traditional way by adding the detergent in the clean water tank and excluding the dosing circuit.

ATTENTION: Always use low-foam detergent. To avoid the production of foam, put a minimum quantity of antifoam liquid in the recovery tank before starting to clean. Do not use pure acids.

5. Close the cap (5) correctly to prevent liquid coming out when working.

ASSEMBLY OF BRUSHES OR DRIVE DISCS (DISCOID SCRUBBING VERSION)

WITHOUT RAPID-CENTERING KIT

To mount the brushes or drive discs on the brush head without using the brush centering kit, proceed as follows:

1. Take the machine to the maintenance area.
2. Activate the “SERVICE” function, see “MAINTENANCE POSITION FUNCTION” on page 85.
3. Perform all the operations required to secure the machine. See “MACHINE SAFETY” on page 35.

CAUTION: it is recommended to wear the appropriate PPE (Personal Protective Equipment), suitable for the work to be carried out.

4. Open the left inspection door (1) (**Fig.1**).
5. Set the fastening anchors (2) on the side splash guard support to the service position, move them upwards, and turn them a quarter turn clockwise (**Fig.2**).
6. Extract the left side splash guard support (3) from the brush head (**Fig.3**).

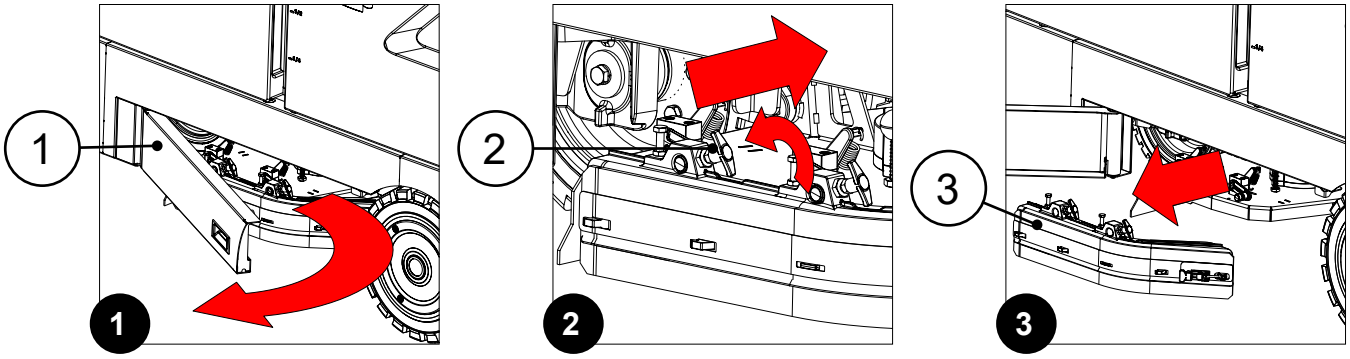

7. Insert the brush (4) in the brush holder plate (5) (**Fig.4**).
8. Turn the brush anti-clockwise until the three buttons (6) on the brush enter the notches (7) on the brush holder plate (**Fig.5**).
9. Turn the brush quickly and firmly in order to push the button towards the coupling spring (8) and lock it in place (**Fig.5**).

N.B.: The image in **Fig.6** indicates the direction of rotation for coupling the left brush; the right brush must be turned in the opposite direction.

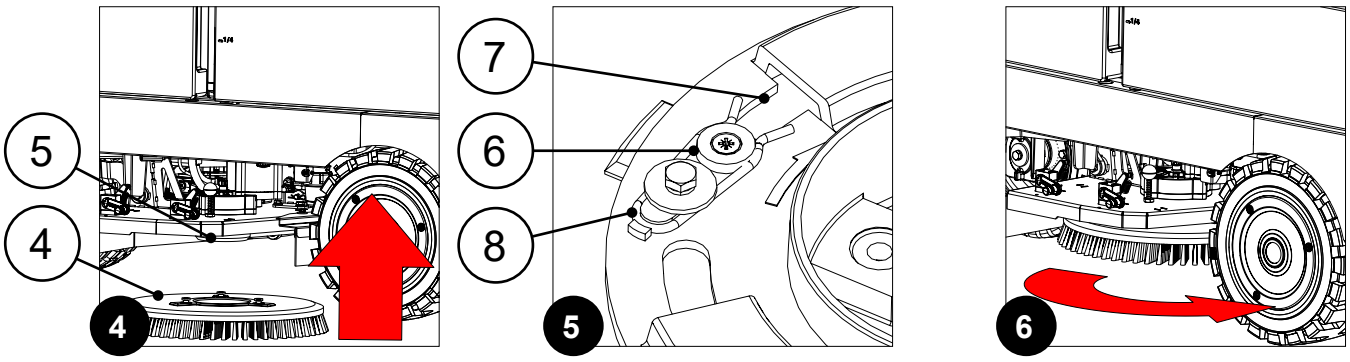

10. Insert the left side splash guard support (3) in the brush head (**Fig.7**).

N.B.: Insert the pin (9) in the hole (10 of the side splash guard support (**Fig.8**).

11. Set the fastening anchors (2) to their working position, turn them a quarter turn anti-clockwise, and move them downwards (**Fig.9**).

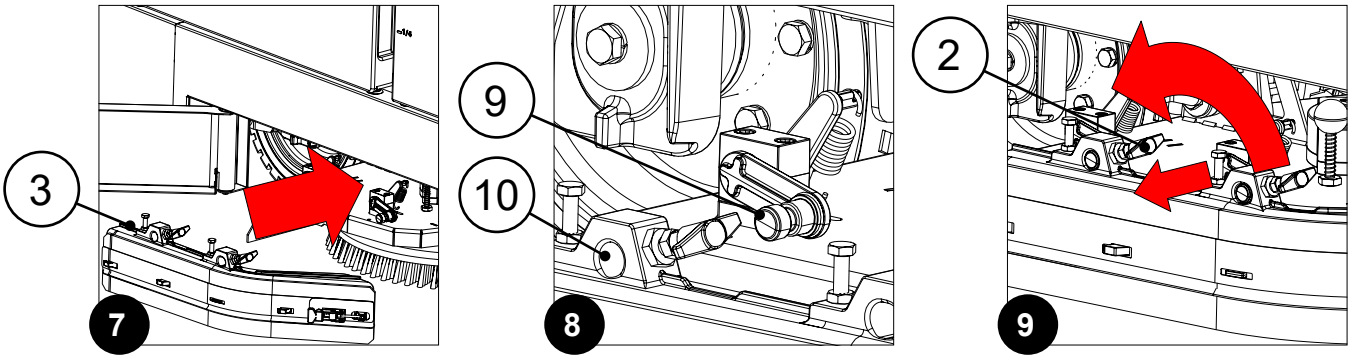

12. Close the left inspection door.
13. Repeat the operations carried out for the right-hand brush too.

N.B.: The side splash guard supports come pre-adjusted. However, if they should need to be adjusted, see "ADJUSTMENT OF BRUSH HEAD SIDE SPLASH GUARD (DISCOID SCRUBBING VERSION)" on page 151.

WITH RAPID-CENTERING KIT

To mount the brushes or drive discs on the brush head using the brush centering kit, proceed as follows:

1. Take the machine to the maintenance area.
2. Activate the service function, press the BRUSH UNCOUPLING button (1) on the control panel (**Fig.1**).

N.B.: with the service function, both the brush head and the squeegee are automatically moved to the intermediate position (referred to as the extra position) by the machine.

N.B.: once the service sequence has been activated, it is not possible to activate other functions or move the machine.

CAUTION: make sure that no people or objects are in the machine's vicinity during this operation. Take the machine to the maintenance area.

CAUTION: it is recommended to wear the appropriate PPE (Personal Protective Equipment), suitable for the work to be carried out.

3. Get off the machine.
4. Open the left-hand inspection door (2) (**Fig.2**).
5. Set the fastening anchors (3) on the side splash guard support to the service position, move them upwards, and turn them a quarter turn clockwise (**Fig.3**).

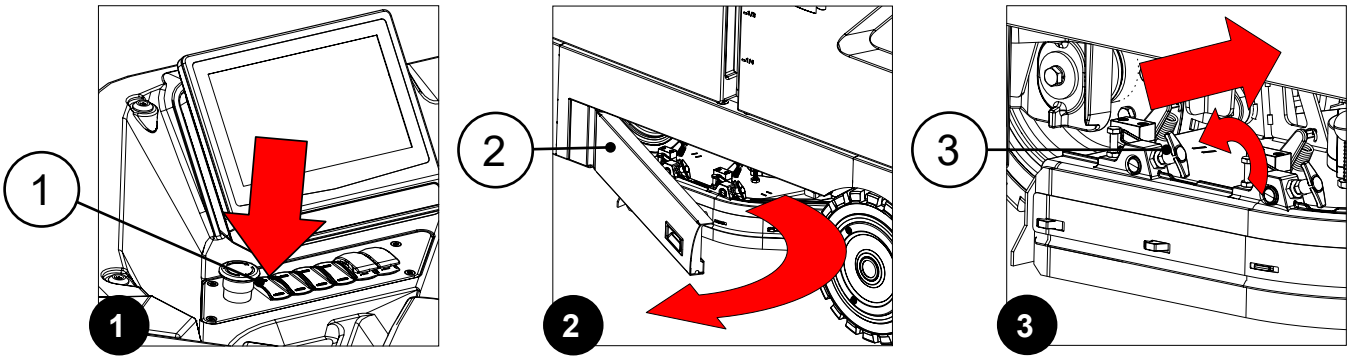

6. Extract the left side splash guard support (4) from the brush head (**Fig.4**).
7. Position the brush that you wish to use on the floor.
8. Activate the brush centering kit, moving the lever (5) present in the brush head body (**Fig.5**).
9. Move the brush into the working position and push it into the machine until it touches the centering kit.
10. Release the lever (5).
11. Repeat steps number three to nine for the right-hand brush.
12. Sit on the driver's seat.
13. Activate the brush coupling function, pressing the button (1) on the control panel for more than 3 seconds (**Fig.1**)

N.B.: in the brush assembly function, the brush head will be automatically brought into the working position; the jacks in the brush head will be activated by impulses to allow the brush to move into position and engage with the brush head itself.

N.B.: once the service sequence has been activated, it is not possible to activate other functions or move the machine.

CAUTION: make sure that no people or objects are in the machine's vicinity during this operation. Take the machine to the maintenance area.

14. Once the brushes are attached, insert the left side splash guard support (4) into the brush head (**Fig.6**).

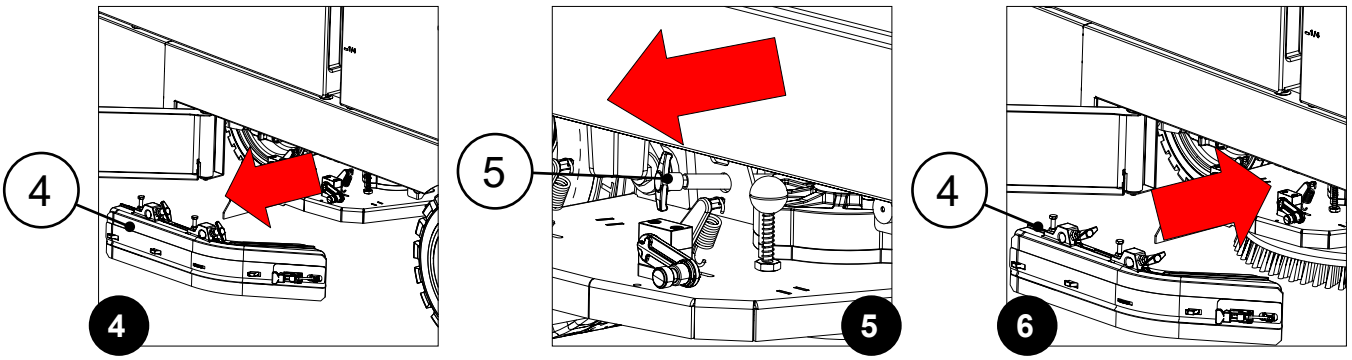

N.B.: Insert the pin (6) in the hole (7) of the side splash guard support (**Fig.7**).

15. Set the fastening anchors (3) to their working position, turn them a quarter turn anti-clockwise, and move them downwards (**Fig.8**).

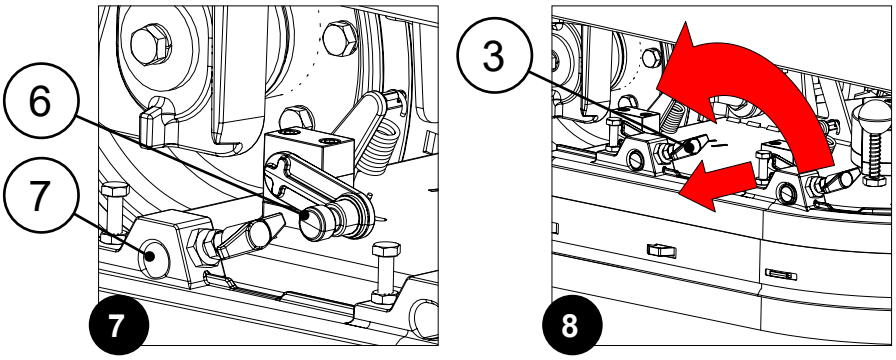

16. Close the left inspection door.
17. Repeat steps thirteen to fifteen for the right-hand splash guard.

N.B.: The side splash guard supports come pre-adjusted. However, if they should need to be adjusted, see "ADJUSTMENT OF BRUSH HEAD SIDE SPLASH GUARD (DISCOID SCRUBBING VERSION)" on page 151.

ASSEMBLING THE ABRASIVE PAD (DISCOID SCRUBBING VERSION)

To mount the abrasive pad on the drive discs on the brush head, do the following:

1. Take the machine to the maintenance area.
2. Activate the “SERVICE” function, see “MAINTENANCE POSITION FUNCTION” on page 85.
3. Perform all the operations required to secure the machine. See “MACHINE SAFETY” on page 35.

CAUTION: it is recommended to wear the appropriate PPE (Personal Protective Equipment), suitable for the work to be carried out.

4. Open the left inspection door (1) (**Fig.1**).
5. Set the fastening anchors (2) on the side splash guard support to the service position, move them upwards, and turn them a quarter turn clockwise (**Fig.2**).
6. Extract the left side splash guard support (3) from the brush head (**Fig.3**).

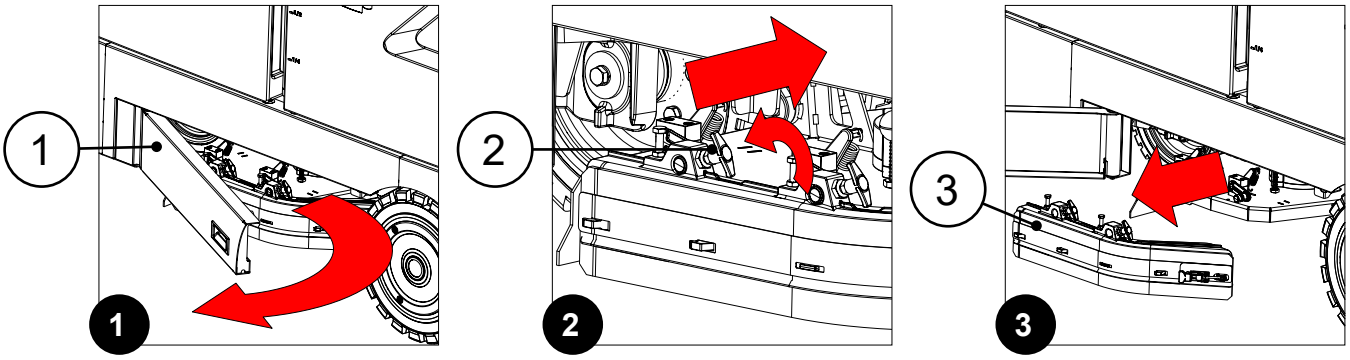

7. Keeping the pin (4) pressed, turn the drive disc (5) clockwise until it is locked in place (**Fig.4**).

N.B.: turn the drive disc quickly and firmly so as to push the button towards the outside of the coupling spring until it releases (**Fig.4**).

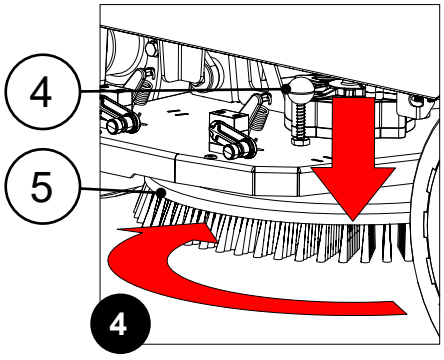

8. With the pad holder removed, insert the abrasive pad you want to use into the bottom of the pad holder.
9. Refit the drive disc in the brush head.
10. Close the left inspection door.
11. Repeat the operation just performed on the right side as well.

ASSEMBLY OF THE SIDE BRUSH HEAD BRUSH OR DRIVE DISCS (DISCOID SCRUBBING VERSION)

To assemble the side brush on the machine, do the following:

1. Take the machine to the maintenance area.
2. Perform all the operations required to secure the machine. See “MACHINE SAFETY” on page 35.

CAUTION: it is recommended to wear the appropriate PPE (Personal Protective Equipment), suitable for the work to be carried out.

3. Stand on the right side of the machine.
4. Insert the brush (1) into the brush holder plate (2) on the side brush head (**Fig.1**).
5. Turn the brush clockwise until the brush is secured onto the brush holder plate (**Fig.2**).

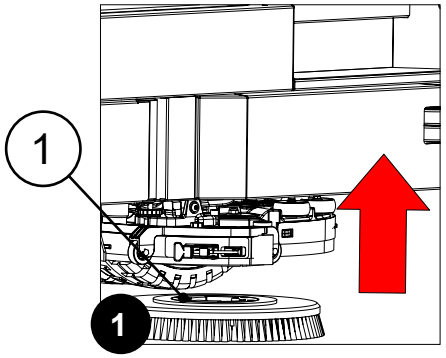

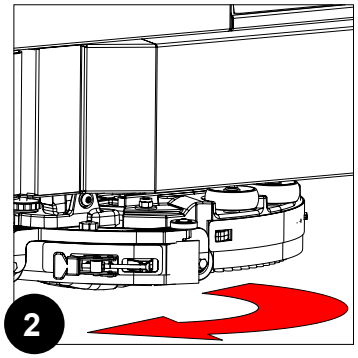

ASSEMBLING THE SIDE BRUSH HEAD ABRASIVE PAD (DISCOID SCRUBBING VERSION)

To mount the abrasive pad on the drive disc of the side brush head, do the following.

1. Take the machine to the maintenance area.
2. Perform all the operations required to secure the machine. See “MACHINE SAFETY” on page 35.

CAUTION: it is recommended to wear the appropriate PPE (Personal Protective Equipment), suitable for the work to be carried out.

3. Stand on the right side of the machine.
4. Moving the brush uncoupling lever (1), rotate the drive disc anti-clockwise until it stops (**Fig.1**).

N.B.: turn the drive disc quickly and firmly so as to push the button towards the outside of the coupling spring until it releases (**Fig.2**).

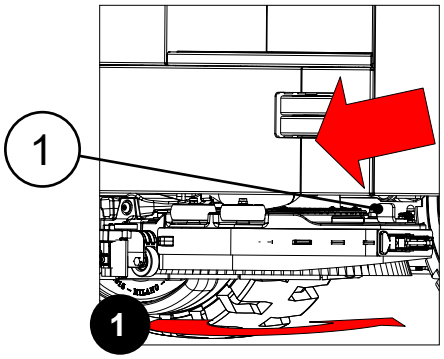

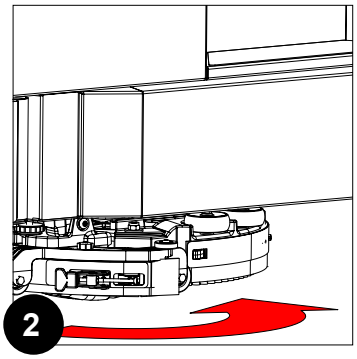

5. With the pad holder removed, insert the abrasive pad you want to use into the bottom of the pad holder.
6. Refit the drive disc in the side brush head.

FITTING OF BRUSHES (CYLINDRICAL SCRUBBING VERSION)

To assemble the brushes on the brush head, proceed as follows:

1. Take the machine to the maintenance area.
2. Activate the “SERVICE” function, see “MAINTENANCE POSITION FUNCTION” on page 85.
3. Perform all the operations required to secure the machine. See “MACHINE SAFETY” on page 35.

CAUTION: it is recommended to wear the appropriate PPE (Personal Protective Equipment), suitable for the work to be carried out.

4. Open the left inspection door (1) (**Fig.1**).
5. Set the fastening anchors (2) on the side splash guard support to the service position, move them upwards, and turn them a quarter turn clockwise (**Fig.2**).
6. Remove the left side splash guard (3) from the brush head (**Fig.3**).

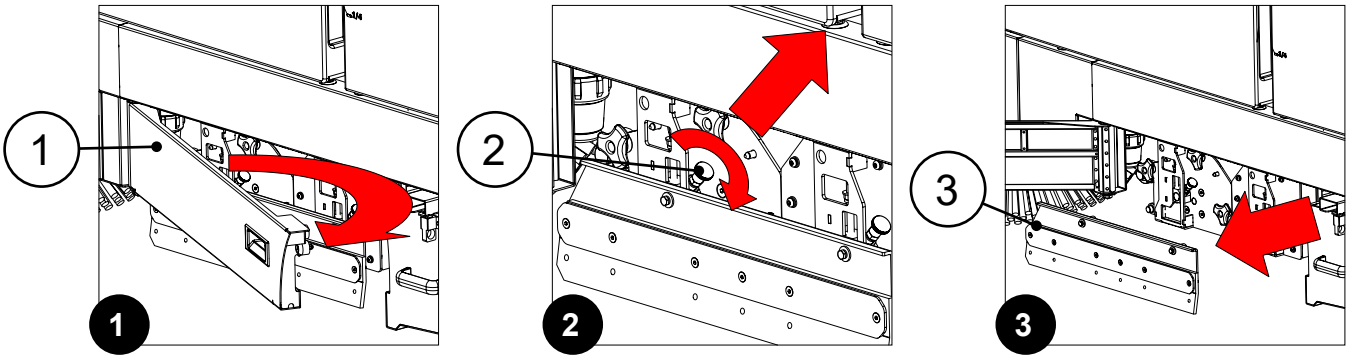

7. Remove the knobs (4) that secure the front brush support (5) (**Fig.4**).
8. Extract the front brush support (5) from the brush head (**Fig.5**).
9. Insert the brush (6) into the tow hook (7) on the brush head body (**Fig.6**).

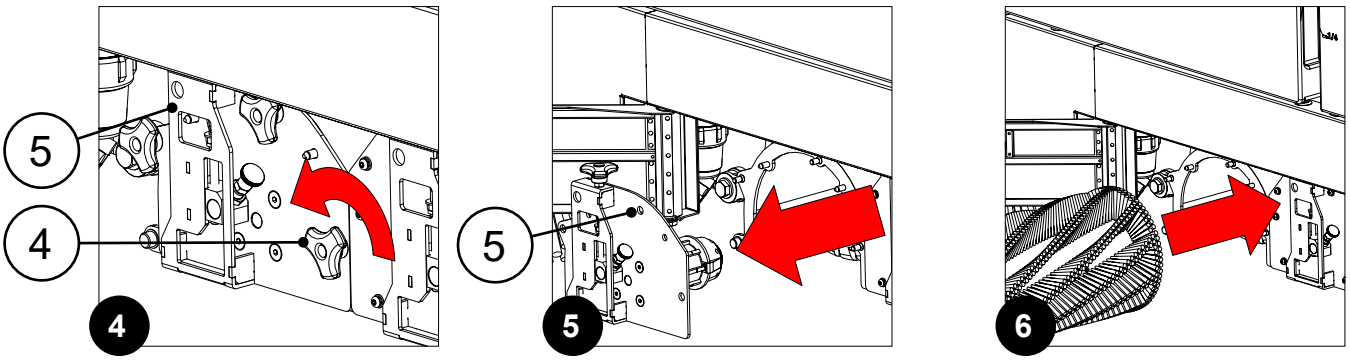

10. Rotate the brush until the fastening hooks (8), present in the tow hook (9) fixed to the idle shaft (10) (**Fig. 7**), correctly enter the slots (11) in the brush (**Fig.8**).
11. Insert the front brush support (5) (**Fig.9**).

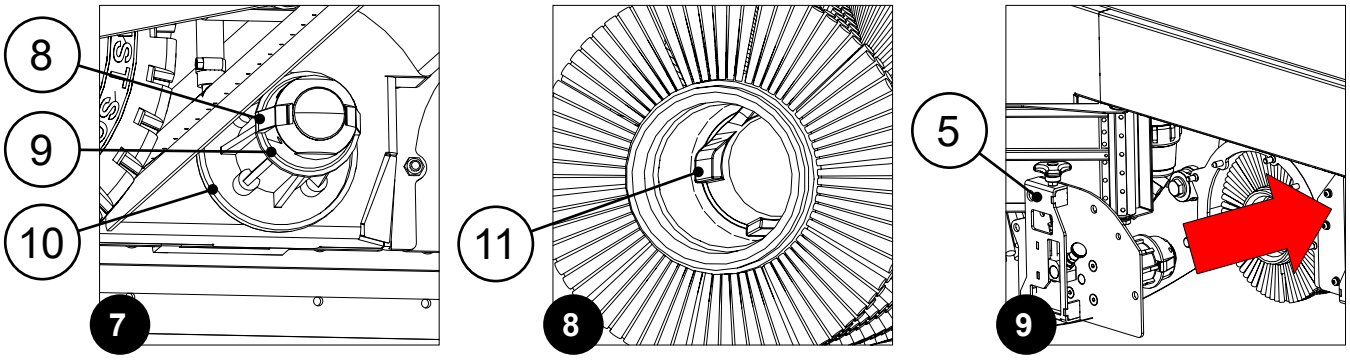

ATTENTION: pay particular attention that the fastening hooks (12), present in the tow hook (13) of the inspection hatch (5) (**Fig. 10**), correctly enter the slots (14) in the brush (**Fig.11**).

ATTENTION: pay particular attention that the fixing pins (15), present in the brush head body, are correctly positioned in the holes in the front brush support (**Fig.12**).

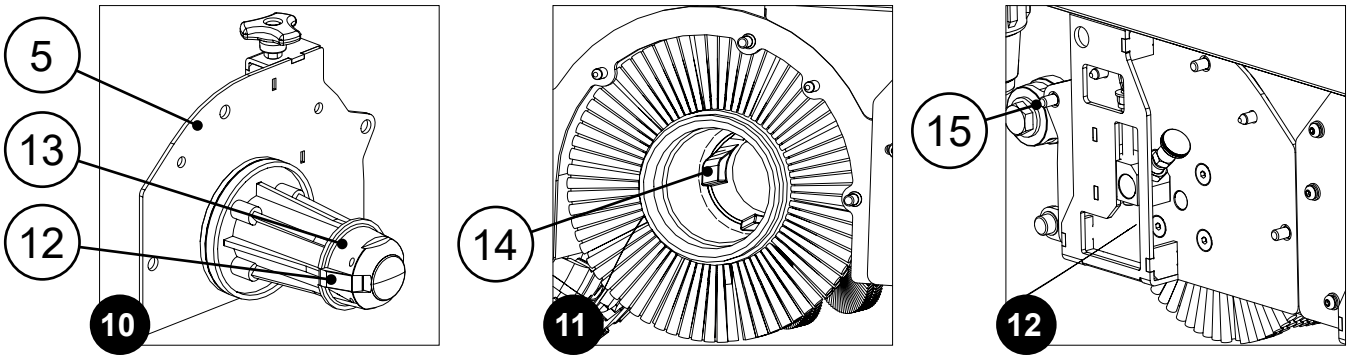

12. Fix the front brush support (5) to the brush head body using the knobs (4) previously removed (**Fig.13**).
13. Position the left side splash guard (3) to the brush head (**Fig.14**).

ATTENTION: pay particular attention that the fixing pins (16), are correctly positioned in the holes (17) in the support (18) (**Fig.15**).

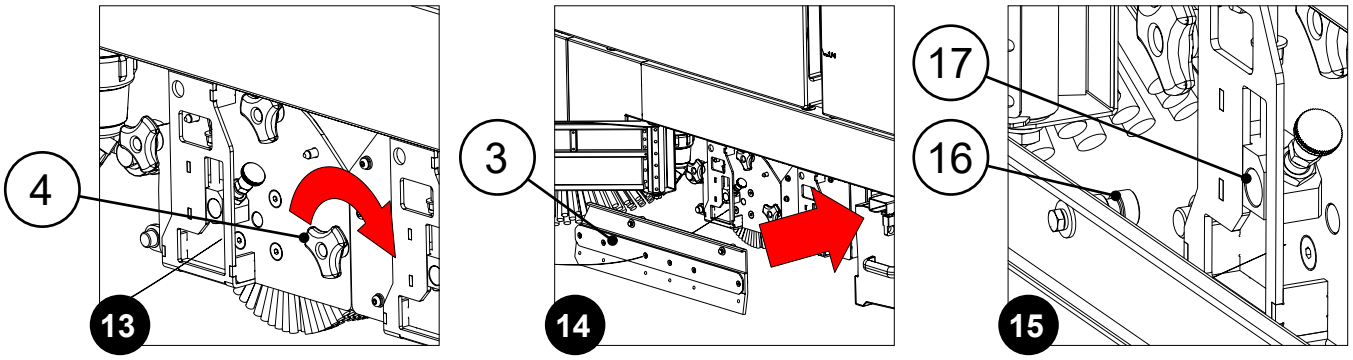

14. Set the fastening anchors (2) to their working position, turn them a quarter turn anti-clockwise, and move them downwards (**Fig.16**).
15. Close the left inspection door (1) (**Fig.17**).
16. Repeat the operations just carried out for the right lateral splash guard support as well.

N.B.: in order to be installed correctly, the brushes must form an X when viewed from above in the forward direction of movement.

N.B.: The side splash guard supports come pre-adjusted. However, if they should need to be adjusted, see “ADJUSTMENT OF BRUSH HEAD SIDE SPLASH GUARD (CYLINDRICAL SCRUBBING VERSION)” on page 152.

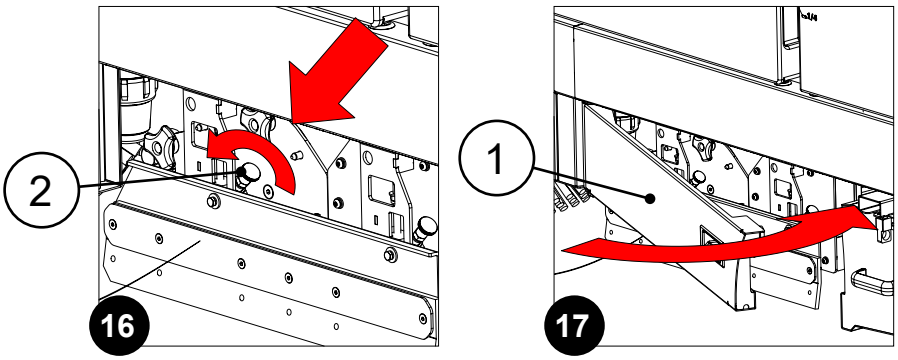

ASSEMBLY OF THE SIDE BRUSHES (CYLINDRICAL - COMBINED SCRUBBING VERSION)

To assemble the brushes on the brush head, proceed as follows:

1. Take the machine to the maintenance area.
2. Activate the “SERVICE” function, see “MAINTENANCE POSITION FUNCTION” on page 85.
3. Perform all the operations required to secure the machine. See “MACHINE SAFETY” on page 35.

CAUTION: it is recommended to wear the appropriate PPE (Personal Protective Equipment), suitable for the work to be carried out.

4. Stand on the left side of the machine.
5. Remove the knob (1) fixing the side brush to the gear motor by rotating the right brush clockwise and the left brush anti-clockwise (**Fig.1**)..
6. Remove the washer (2) holding the side brush in place (**Fig.2**).
7. Insert the side brush, making sure to correctly position the pins (3), present in the brush support, in the holes (4), present in the brush (**Fig.3**).

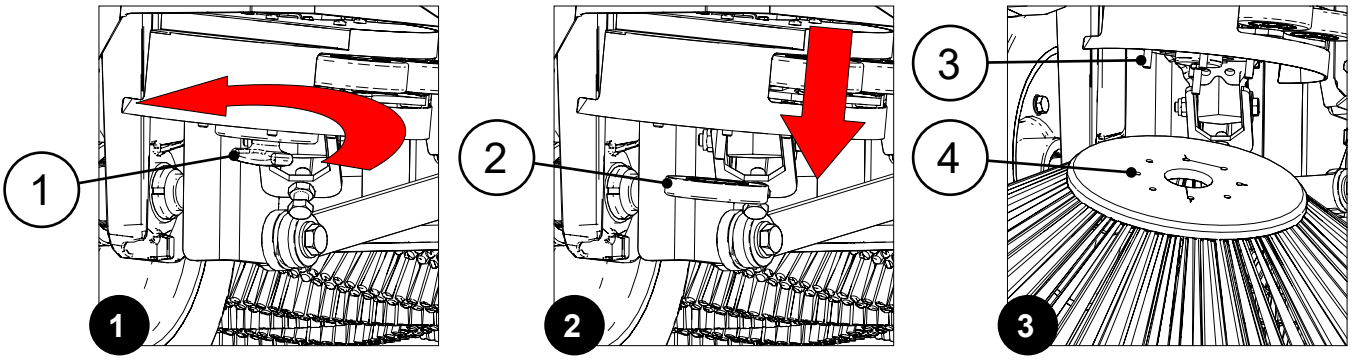

8. Fix the brush to the flange using the knob (1), remembering to put the washer (2) in between the knob and the brush.
9. Once the brush has been fitted, move on to the one on the right.

ASSEMBLY OF BRUSHES (COMBINED VERSION)

To assemble the brushes on the brush head, proceed as follows:

1. Take the machine to the maintenance area.
2. Activate the “SERVICE” function, see “MAINTENANCE POSITION FUNCTION” on page 85.
3. Perform all the operations required to secure the machine. See “MACHINE SAFETY” on page 35.

CAUTION: it is recommended to wear the appropriate PPE (Personal Protective Equipment), suitable for the work to be carried out.

4. Open the left inspection door (1) (**Fig.1**).
5. Remove the knobs (2) that secure the front brush support (**Fig.2**).
6. Extract the front brush support (3) from the brush head (**Fig.3**).

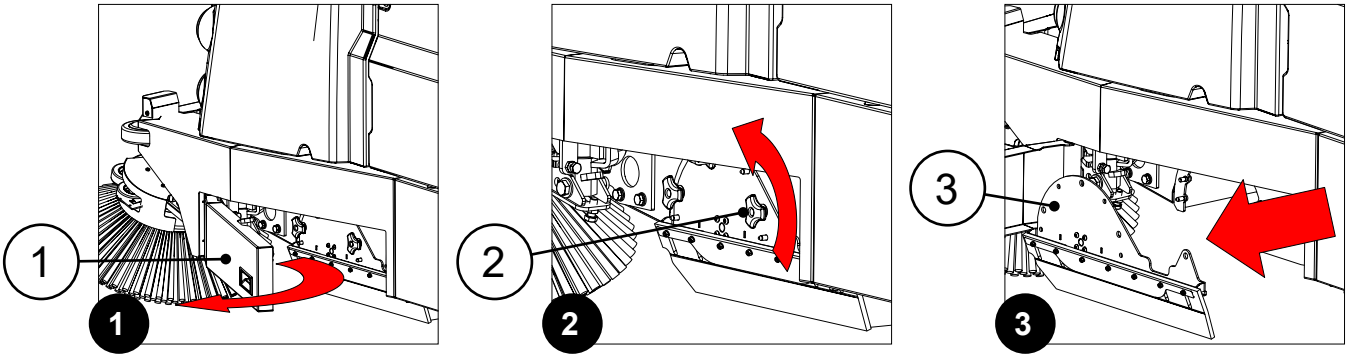

7. Insert the brush into the tow hook on the brush head body (**Fig.4**).
8. Rotate the brush until the fastening hooks (4) present in the tow hook (5) (**Fig. 5**) correctly enter the slots (6) in the brush (**Fig.6**).

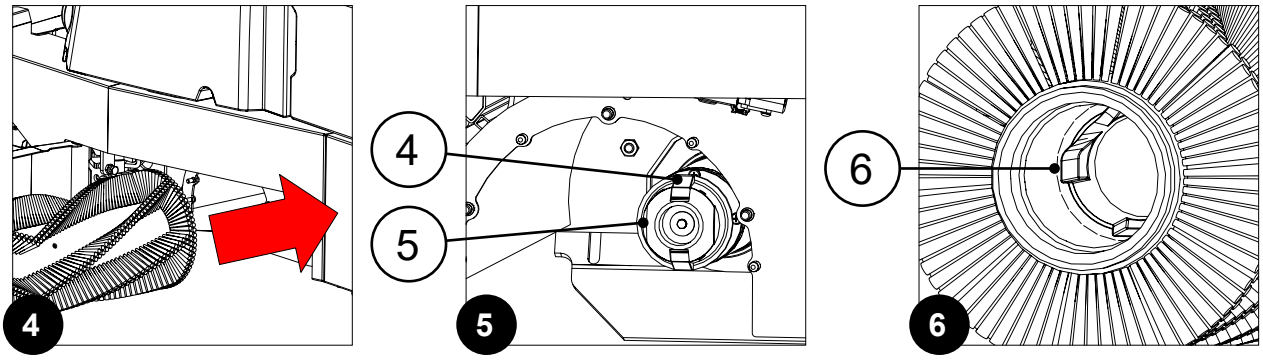

9. Insert the front brush support (3) (**Fig.7**).
10. Rotate the brush until the fastening hooks (7), present in the tow hook (8) fixed to the idle shaft (**Fig. 8**), correctly enter the slots (10) on the brush (**Fig.9**).

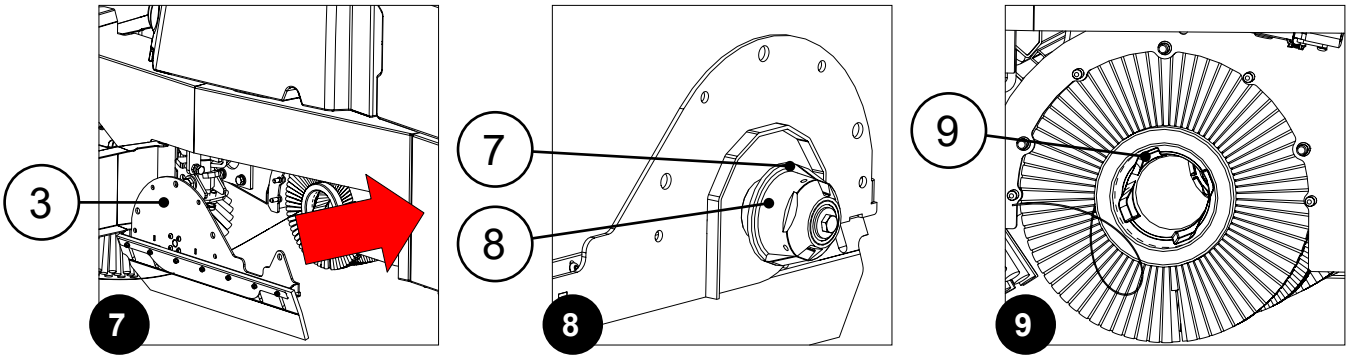

ATTENTION: pay particular attention that the fixing pins (10), present in the brush head body, are correctly positioned in the holes (11) in the front brush support (**Fig.10**).

11. Fix the front brush support (3) to the brush head body using the knobs (2) previously removed (**Fig.11**).
12. Close the left inspection door (1) (**Fig.12**).
13. Repeat the operations just carried out for the right lateral splash guard support as well.

N.B.: in order to be installed correctly, the brushes must form an X when viewed from above in the forward direction of movement.

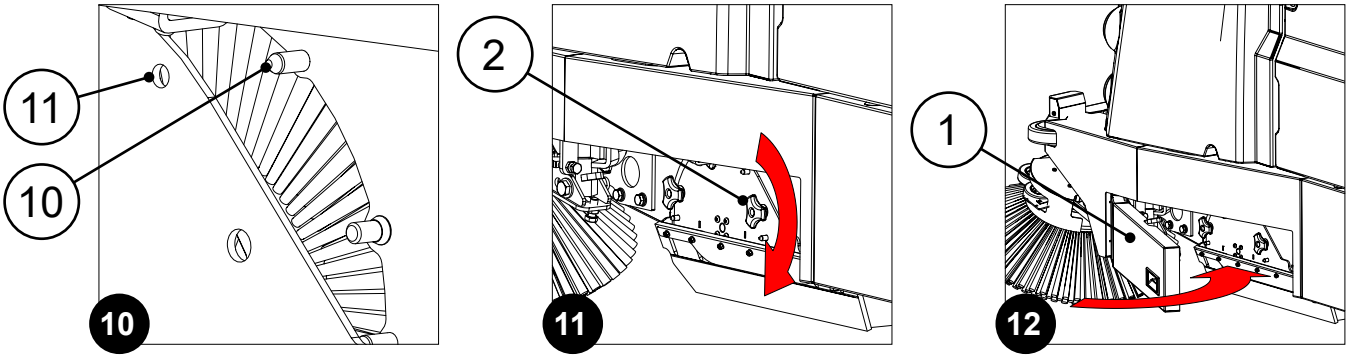

WORK PREPARATION CHECKLIST

Check for any fluid leaks.	If any fluid leaks are encountered, contact your FIMAP service centre of reference, or the centre nearest to you.
Check the fluid level of the brake system.	If alarm indicator 15 appears on the control display, contact your FIMAP service centre of reference, or the centre nearest to you.
Check the horn; the front and rear lights; the safety lights and the alarm (if installed).	If there is a fault, contact your FIMAP service centre of reference, or the centre nearest to you.
Check that the service brakes and steering are functioning properly.	If there is a fault, contact your FIMAP service centre of reference, or the centre nearest to you.
Check that the electric brake is correctly engaged.	If the electric brake off symbol appears on the control display when turning on the machine, see “TRACTION ELECTRIC BRAKE ACTIVATION” on page 41.
Check the tyres to make sure they are not damaged.	If there is a fault, contact your FIMAP service centre of reference, or the centre nearest to you.
Check the charge level of the battery box.	Check the charge level of the battery box on the control display, and recharge it if necessary. See the “RECHARGING THE BATTERY BOX” on page 43.
For machine versions equipped with the standard seat, adjust the driver's seat.	Adjust the driver's seat before starting the work activities. See “ADJUSTMENT OF THE DRIVER’S SEAT (STANDARD SEAT)” on page 44.
For machine versions equipped with the comfort seat, adjust the driver's seat.	Adjust the driver's seat before starting the work activities. See “ADJUSTMENT OF THE DRIVER’S SEAT (COMFORT SEAT)” on page 45.
Check whether the solution tank is full.	If the solution tank is empty, refill it, see “DETERGENT SOLUTION” on page 47.
Check whether the recovery tank is full.	If the recovery tank is full, empty it. See “DRAINING THE RECOVERY TANK” on page 116.
For scrubbing machine versions with cylindrical brushes, check whether the debris hopper in the brush head body is full.	If the debris hopper is full, empty it. See “EMPTYING THE DEBRIS HOPPER (CYLINDRICAL VERSION)” on page 80.
For sweeping machine versions, check whether the debris hopper the front of the machine is full.	If the debris hopper is full, empty it. See “EMPTYING THE DEBRIS HOPPER (COMBINED VERSION)” on page 81.
Check the condition of the collection filter tray on the recovery tank.	If the tray is dirty, clean it. See “CLEANING THE COLLECTION FILTER TRAY” on page 114.
Check the condition of the wave protection tray on the recovery tank.	If the tray is dirty, clean it. See “CLEANING THE WAVE PROTECTION TRAY” on page 115.
Check the condition of the water system filter.	If the cartridge in the filter body is dirty, clean it. See “CLEANING THE WATER SYSTEM FILTER” on page 118.
For machine versions equipped with the automatic detergent dosing system, check the condition of the chemical detergent filter.	If the cartridge in the filter body is dirty, clean it. See the “CLEANING THE FILTER ON THE AUTOMATIC CHEMICAL DETERGENT MANAGEMENT SYSTEM (FSS VERSION)” on page 119.
For machine versions equipped with the detergent solution recycling system, check the conditions of the detergent solution recycling system filter in the recovery tank.	If the detergent solution recycling system filter in the recovery tank is dirty, clean it. See “CLEANING THE FILTER ON THE DETERGENT SOLUTION RECYCLING SYSTEM (FLR VERSION)” on page 120.

Check the condition of the side splash guards in the scrubbing head.	If the side splash guards on the brush head are dirty, see “CLEANING OF BRUSH HEAD SIDE SPLASH GUARD (DISCOID SCRUBBING VERSION)” on page 123.
	If the side splash guards on the brush head are worn or damaged, replace them. See “REPLACEMENT OF BRUSH HEAD SIDE SPLASH GUARD (DISCOID SCRUBBING VERSION)” on page 139.
	If the side splash guards on the brush head are dirty, see “CLEANING OF BRUSH HEAD SIDE SPLASH GUARD (CYLINDRICAL SCRUBBING VERSION)” on page 127.
	If the side splash guards on the brush head are worn or damaged, replace them. See “REPLACEMENT OF BRUSH HEAD SIDE SPLASH GUARD (CYLINDRICAL SCRUBBING VERSION)” on page 143.
Check the condition of the brushes in the scrubbing head.	If the brushes in the brush head are dirty, clean them, see “CLEANING OF SIDE BRUSH HEAD DRIVE BRUSH - DISC (DISCOID SCRUBBING VERSION)” on page 123.
	If the brushes in the brush head are worn or damaged, replace them. See “REPLACEMENT OF SIDE BRUSH HEAD DRIVE BRUSH OR DISCS (DISCOID SCRUBBING VERSION)” on page 140.
	If the brushes in the brush head are dirty, clean them, see “CLEANING OF BRUSH HEAD BRUSH (CYLINDRICAL SCRUBBING VERSIONS)” on page 126.
	If the brushes in the brush head are worn or damaged, replace them. See “REPLACING THE BRUSH HEAD BRUSHES (CYLINDRICAL SCRUBBING VERSION)” on page 143.
Check the condition of the brushes in the combined machine version.	If the brushes in the brush head are dirty, clean them. See “CLEANING THE BRUSH HEAD BRUSHES (COMBINED VERSION)” on page 130.
	If the brushes in the brush head are worn or damaged, replace them. See “REPLACING THE SWEEPING BRUSH HEAD BRUSHES (COMBINED VERSION)” on page 146.
For machine versions equipped with side scrubbing brush, check the condition of the splash guard.	If the splash guard is dirty, clean it. See “CLEANING OF SIDE BRUSH HEAD SPLASH GUARD (DISCOID SCRUBBING VERSION)” on page 124.
	If the side splash guards on the brush head are worn or damaged, replace them. See “REPLACEMENT OF SIDE BRUSH HEAD SPLASH-GUARD RUBBER BLADE (DISCOID SCRUBBING VERSION)” on page 141.
For machine versions equipped with the side brush, check the condition of the brush on the side brush head.	If the brush in the side brush head is dirty, clean it. See “CLEANING OF SIDE BRUSH HEAD DRIVE BRUSH - DISC (DISCOID SCRUBBING VERSION)” on page 123.
	If the brush in the side scrubbing brush head is worn on damaged, replace it. See “REPLACEMENT OF SIDE BRUSH HEAD DRIVE BRUSH OR DISCS (DISCOID SCRUBBING VERSION)” on page 140.
For machine versions with sweeping side brushes, check the condition of the brushes in the side brush heads.	If the brush in the side brush head is dirty, clean it. See “CLEANING THE SIDE BRUSH (CYLINDRICAL - COMBINED SCRUBBING VERSION)” on page 129.
	If the brush in the side brush head is worn or damaged, replace it. See “REPLACEMENT OF THE SIDE BRUSH (CYLINDRICAL-COMBINED SCRUBBING VERSION)” on page 145.
Check the condition of the squeegee.	If the squeegee is dirty, clean it, see “CLEANING THE SQUEEGEE” on page 111.

Check the state of wear of the rubber blades in the squeegee.	If the wear of the squeegee rubber blades is unsuitable for the job to be carried out, replace them. See “REPLACING THE SQUEEGEE RUBBER BLADES” on page 136.
For machine versions equipped with the lateral scrubbing brush head, check the condition of the lateral squeegee body.	If the side squeegee is dirty, clean it, see “CLEANING OF SIDE BRUSH HEAD SQUEEGEE (DISCOID SCRUBBING VERSION)” on page 125.
For machine versions equipped with the lateral scrubbing brush head, check the wear status of the lateral squeegee body's rubber blades.	If the wear of the squeegee rubber blades is unsuitable for the job to be carried out, replace them. See “REPLACEMENT OF SIDE BRUSH HEAD SQUEEGEE RUBBER BLADES (DISCOID SCRUBBING VERSION)” on page 141.
Check the condition of the squeegee vacuum tube.	If the squeegee vacuum pipe is dirty, clean it, see “CLEANING THE SQUEEGEE VACUUM HOSE” on page 112.
For scrubbing machine versions with cylindrical brushes, check the state of the debris hopper suction filter.	If the collection filter is blocked or dirty, clean it. See “CLEANING THE DEBRIS HOPPER (CYLINDRICAL SCRUBBING VERSION)” on page 128.
For sweeping machine versions, check the state of the debris hopper suction filter.	If the collection filter is blocked or dirty, clean it. See “CLEANING THE DEBRIS HOPPER VACUUM FILTER (COMBINED VERSION)” on page 131.
Check that the gasket on the recovery tank's lid is not damaged or worn.	If the gasket is damaged, contact the FIMAP service centre to have it replaced.
For machine versions with the continuous detergent solution recycling system, check the dirty detergent solution filters inside the recovery tank.	If the dirty detergent solution filters in the recovery tank are dirty, clean them. See “CLEANING THE FILTER ON THE DETERGENT SOLUTION RECYCLING SYSTEM (FLR VERSION)” on page 120.

WORKING PROGRAMS

The machine can be used with the following working programs:

1. ECO MODE: for light maintenance cleaning tasks, using fewer resources and operating at a low noise level, see “ECO MODE WORKING PROGRAM” on page 63).
2. POWER MODE: for operations where maximum washing power is required to clean particularly dirty environments, see “POWER MODE WORKING PROGRAM” on page 64.
3. MANUAL MODE: the operator freely evaluates and chooses the parameters based on the cleaning requirements that arise during the course of the intervention (see paragraph “MANUAL MODE WORKING PROGRAM” on page 65).
4. PROGRAM ZONE: for recurring interventions at work sites, there are three working programs stored in the machine's memory that can be easily selected in order to help the operator carry out the intervention correctly, see paragraph “PROGRAM ZONE WORKING PROGRAM” on page 65).

ECO MODE WORKING PROGRAM

The ECO MODE working program can be used for light maintenance work.
The ECO MODE program is a program which guarantees the best possible performance in terms of consumption and cleaning.

The ECO MODE working program can be enabled:

1. By pressing the button (1) on the control panel.
2. With the transfer working mode enabled, by pressing the brush head control button (2) or the squeegee control button (3).

N.B.: As soon as the button (1) is pressed, the ECO MODE working program symbol (4) will appear on the control display.

N.B.: to deactivate the ECO MODE working program, simply:

- Press the button (1) on the control panel.
- Activate the POWER MODE program, see “POWER MODE WORKING PROGRAM” on page 64.
- Activate the MANUAL MODE program, see “MANUAL MODE WORKING PROGRAM” on page 65.
- Activate the PROGRAM ZONE, see “PROGRAM ZONE WORKING PROGRAM” on page 65.

N.B.: When the ECO MODE program is not enabled, the relative symbol (4) will not be present in the control display.

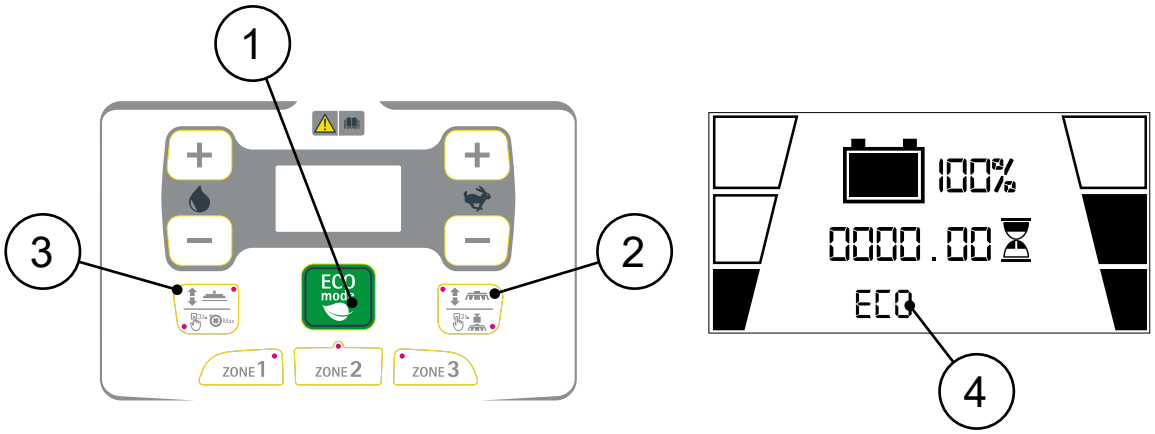

N.B.: By selecting the ECO MODE working program, the working parameters (machine speed; the force exerted on the brushes; the performance of the suction motor; the detergent solution flow) are automatically changed.

The parameters pre-set on a scale of 1 to 3 are as follows:

Speed	Brush	Vacuuming	Detergent Solution
2	1	1	1

POWER MODE WORKING PROGRAM

The POWER MODE working program can be used for work in extremely dirty environments, and guarantees maximum machine performance.

The POWER MODE working program can be activated by moving the lever (1) underneath the steering wheel.

N.B.: to deactivate the POWER MODE working program, simply:

- Move the lever (1) underneath the steering wheel to the end of its stroke.
- Activate the ECO MODE program, see “ECO MODE WORKING PROGRAM” on page 63.
- Activate the MANUAL MODE program, see “MANUAL MODE WORKING PROGRAM” on page 65.
- Activate the PROGRAM ZONE, see “PROGRAM ZONE WORKING PROGRAM” on page 65.

N.B.: when the POWER MODE program is not enabled, the relative symbol (2) will not be present in the control display.

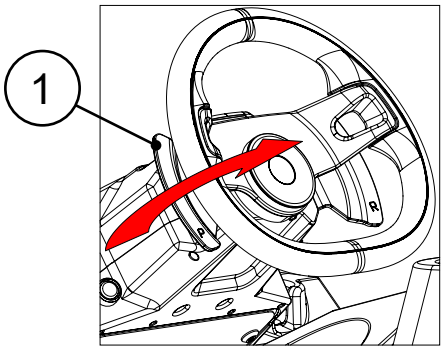

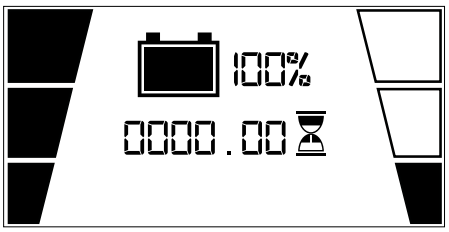

N.B.: by selecting the POWER MODE working program, the working parameters (machine speed; the force exerted on the brushes; the performance of the suction motor; the detergent solution flow) are automatically changed.

The parameters pre-set on a scale of 1 to 3 are as follows:

Speed	Brush	Vacuuming	Detergent Solution
1	3	3	3

MANUAL MODE WORKING PROGRAM

With the MANUAL MODE working program, it is the operator who evaluates and chooses the parameters based on the cleaning requirements that arise during the course of the work activities.
To switch from the ECO MODE or POWER MODE or PROGRAM ZONE program to the MANUAL ZONE program, simply change one of the performance levels.

There are two performance levels:

- Forward speed level, see """REGULATING THE FORWARD SPEED" on page 83.
- Detergent solution dosing level, see "ADJUSTMENT OF THE DETERGENT SOLUTION FLOW" on page 83.

PROGRAM ZONE WORKING PROGRAM

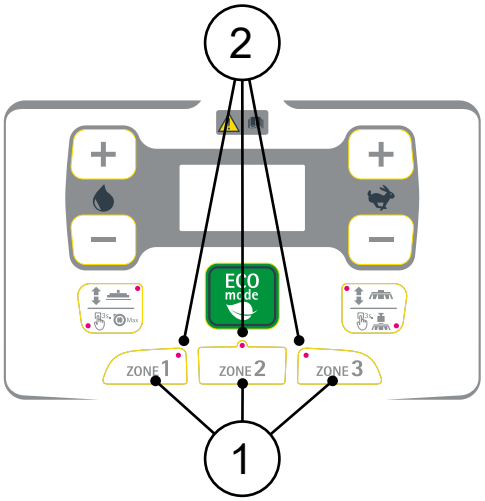

In order to facilitate the operator's work activities for recurring interventions at work sites, the decision was made to equip the machine with three stored working programs, so that the most appropriate performance levels for each work area are already set.

To select a zone working program, simply press one of the three buttons (1) at the bottom of the control panel.

N.B.: When the WORK ZONE program is active, the corresponding LED (2) will be illuminated.

N.B.: to deactivate the WORK ZONE working program, simply:

- Activate the ECO MODE program, see "ECO MODE WORKING PROGRAM" on page 63.
- Activate the MANUAL MODE program, see "MANUAL MODE WORKING PROGRAM" on page 65.

N.B.: If a value for of one of the ZONE programs' performance levels needs to be changed, simply make the desired change, and then hold down the button for the program to be modified for about three seconds. The change will be saved when the corresponding LED flashes.

N.B.: by selecting one of the three ZONE programs, the working parameters (machine speed; the force exerted on the brushes; the performance of the suction motor; the detergent solution flow) are automatically changed.

The parameters pre-set on a scale of 1 to 3 are as follows:

	Speed	Brush	Vacuuming	Detergent Solution
Zone 1	2	1	1	1
Zone 2	3	2	3	2
Zone 3	2	3	3	3

WORKING MODE

TRANSFER WORKING MODE

In the TRANSFER working mode, both the brush head and the squeegee are in their resting positions. This working mode is used to transfer the machine from the work site to the maintenance site.
To use the machine in transfer mode, do the following:

1. Carry out all the checks listed in the "WORK PREPARATION CHECKLIST" on page 60.
2. Sit on the driver's seat.
3. Insert the key (1) into the slot (2) on the right side of the column (**Fig.1**).
4. Turn on the machine and turn the key (1) a quarter turn clockwise (**Fig.2**).
5. When the control display is turned on, screens appear in sequence, the last of which contains the machine programming characteristics.

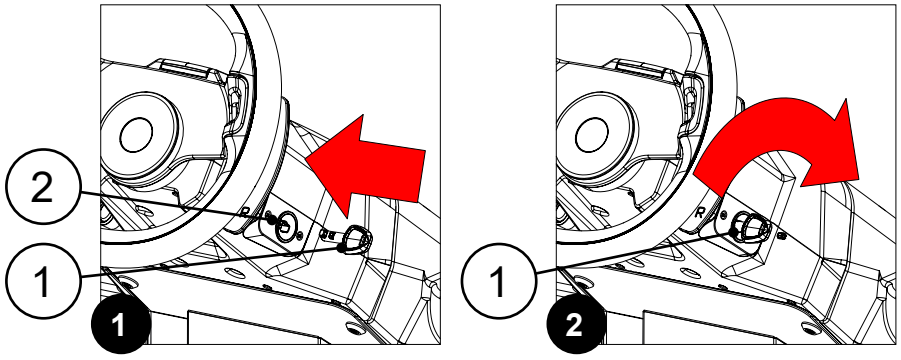

N.B.: when the machine is turned on, the TRANSFER working mode is enabled.

N.B.: the detergent solution performance levels is reset automatically.

6. The machine is now in the transfer working mode.
7. Press the drive pedal (3) (**Fig.3**) to begin moving the machine.

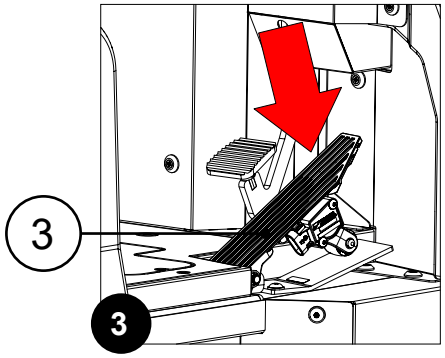

SCRUBBER WORKING MODE

In the SCRUBBING MACHINE working mode, the brush head and squeegee are in their working positions. This working mode is used to scrub and dry the floor at the same time.
To use the machine in scrubbing machine working mode, do the following:

1. Carry out all the checks listed in the "WORK PREPARATION CHECKLIST" on page 60.
2. Sit on the driver's seat.
3. Insert the key (1) into the slot (2) on the right side of the column (**Fig.1**).
4. Turn on the machine and turn the key (1) a quarter turn clockwise (**Fig.2**).
5. When the control display is turned on, screens appear in sequence, the last of which contains the machine programming characteristics.

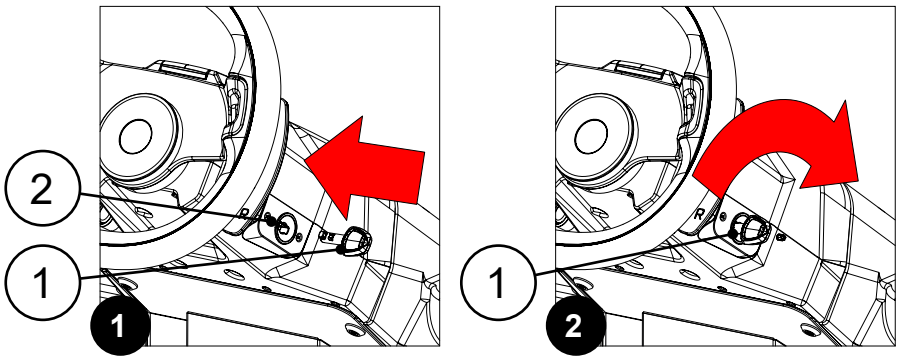

N.B.: when the machine is turned on, the TRANSFER working mode is enabled.

N.B.: the detergent solution performance levels is reset automatically.

6. The machine is now in the transfer working mode.
7. By selecting one of the working programs like ECO MODE; POWER MODE; or PROGRAM ZONE, the SCRUBBING MACHINE working mode will be enabled.

N.B.: for more information on the working program types, see "WORKING PROGRAMS" on page 63.

8. Let's take the ECO MODE working program as an example: press the button (3) on the control panel (**Fig. 3**).

N.B.: by selecting the ECO MODE working program on the control display (**Fig. 4**), the relative symbol (4) will appear at the bottom of the screen.

N.B.: by selecting the ECO MODE working program, the pre-set performance levels are automatically loaded, based on those selected on the function board parameters list.

9. Press the drive pedal (5) (**Fig.5**) to begin moving the machine.

N.B.: as soon as the drive pedal is pressed, the brush head is automatically moved to the working position.

N.B.: as soon as the brush head reaches its working position, the brush head positioning LED (6) will light up on the control panel (**Fig. 3**).

N.B.: as soon as the drive pedal is pressed, the squeegee is automatically moved to the working position.

N.B.: as soon as the squeegee reaches its working position, the squeegee positioning LED (7) will light up on the control panel (**Fig. 3**).

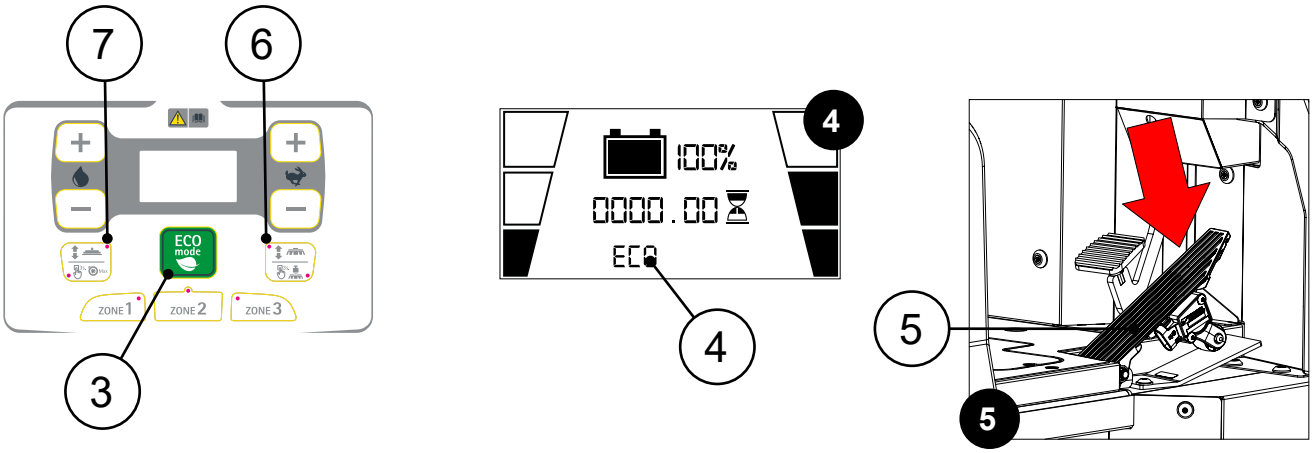

N.B.: the brush motors; the solenoid valve, and the detergent solution pump only begin functioning once the brush head is in its working position.

N.B.: the suction motors are only activated once the squeegee is in its working position.

N.B.: if the machine is stopped and the drive pedal (5) released while working, the brush head will automatically move to the intermediate position (raised off the floor) after the RESET DELAY (BRUSHES BRUSH MOT) time. To change this parameter, contact a FIMAP service centre or refer to “MENÙ RESET DELAY (BRUSHES BRUSH MOT)” on page 35 in the "OPERATOR INTERFACE CONFIGURATION MANUAL" delivered with the machine documentation.

N.B.: if the machine is stopped and the drive pedal (5) released while working, the side brush head will automatically move to the raised position (raised off the floor) after the RESET DELAY (OPTIONAL OPT. BRUSH) time. To change this parameter, contact a FIMAP service centre or refer to “MENÙ RESET DELAY (OPTIONAL OPT. BRUSH)” on page 51 in the "OPERATOR INTERFACE CONFIGURATION MANUAL" delivered with the machine documentation.

N.B.: if the machine is stopped and the drive pedal (5) released while working, the squeegee will automatically move to the intermediate position (raised off the floor) after the RESET DELAY (VACUUM VAC. MOT) time. To change this parameter, contact a FIMAP service centre or refer to “MENÙ RESET DELAY (VACUUM VAC. MOT)” on page 47 in the "OPERATOR INTERFACE CONFIGURATION MANUAL" delivered with the machine documentation.

N.B.: if the machine is stopped and the drive pedal (5) released while working, after a certain period of time, the suction motors will stop working; this operating delay is designed to allow the dirty solution present in the machine's vacuum system to be completely vacuumed up. To change this parameter, contact your nearest FIMAP service centre or send an email to service@fimap.com, or visit the website at www.fimap.com.

PRE-SCRUB WORKING MODE

In the PRE-SCRUBBING working mode, only the brush head is in its working position, with the squeegee remaining in its resting position. This working mode is used to thoroughly scrub the floor without drying it.
To use the machine in pre-scrub working mode, do the following:

1. Carry out all the checks listed in the "WORK PREPARATION CHECKLIST" on page 60.
2. Sit on the driver's seat.
3. Insert the key (1) into the slot (2) on the right side of the column (**Fig.1**).
4. Turn on the machine and turn the key (1) a quarter turn clockwise (**Fig.2**).
5. When the control display is turned on, screens appear in sequence, the last of which contains the machine programming characteristics.

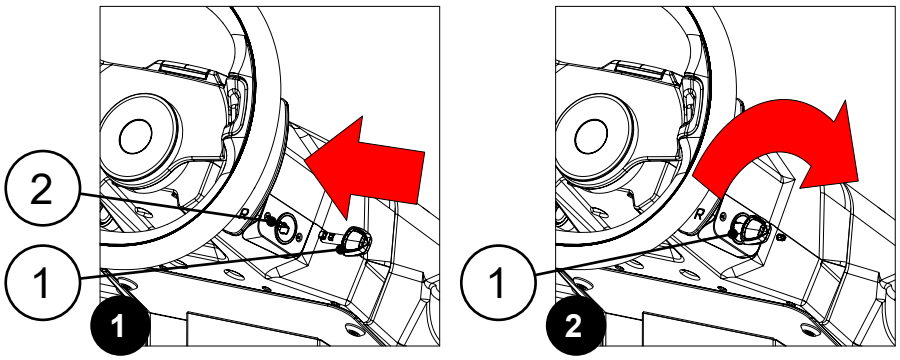

N.B.: when the machine is turned on, the TRANSFER working mode is enabled.

N.B.: the detergent solution performance levels is reset automatically.

6. The machine is now in the transfer working mode.
7. By selecting one of the working programs like ECO MODE; POWER MODE; or PROGRAM ZONE, the SCRUBBING MACHINE working mode will be enabled.

N.B.: for more information on the working program types, see "WORKING PROGRAMS" on page 76.

8. Let's take the ECO MODE working program as an example: press the button (3) on the control panel (**Fig. 3**).

N.B.: by selecting the ECO MODE working program on the control display (**Fig. 4**), the relative symbol (4) will appear at the bottom of the screen.

N.B.: by selecting the ECO MODE working program, the pre-set performance levels are automatically loaded, based on those selected on the function board parameters list.

9. Press the drive pedal (5) (**Fig.5**) to begin moving the machine.

N.B.: as soon as the drive pedal is pressed, the brush head is automatically moved to the working position.

N.B.: as soon as the brush head reaches its working position, the brush head positioning LED (6) will light up on the control panel (**Fig. 3**).

N.B.: as soon as the drive pedal is pressed, the squeegee is automatically moved to the working position.

N.B.: as soon as the squeegee reaches its working position, the squeegee positioning LED (7) will light up on the control panel (**Fig. 3**).

N.B.: the brush motors; the solenoid valve, and the detergent solution pump only begin functioning once the brush head is in its working position.

10. Press the SQUEEGEE CONTROL button (8) on the control panel (**Fig.3**).

N.B.: as soon as the button (8) is pressed, the squeegee control jack is engaged, causing the squeegee to be automatically brought to it rest position.

N.B.: as soon as the squeegee arrives to the rest position, the LED (7) on the control panel related to squeegee positioning (**Fig.3**) turns off.

N.B.: as soon as the button (8) at the bottom of the control display (**Fig. 4**) is pressed, the ECO MODE working program symbol (4) will disappear.

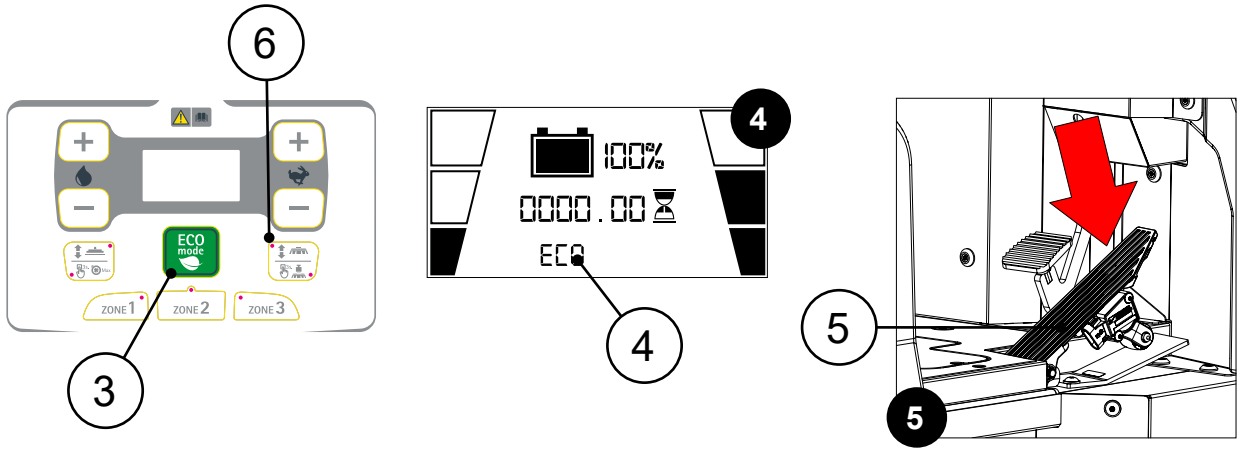

N.B.: if the machine is stopped and the drive pedal (5) released while working, the brush head will automatically move to the intermediate position (raised off the floor) after the RESET DELAY (BRUSHES BRUSH MOT) time. To change this parameter, contact a FIMAP service centre or refer to “MENÙ RESET DELAY (BRUSHES BRUSH MOT)” on page 35 in the "OPERATOR INTERFACE CONFIGURATION MANUAL" delivered with the machine documentation.

N.B.: if the machine is stopped and the drive pedal (5) released while working, the side brush head will automatically move to the raised position (raised off the floor) after the RESET DELAY (OPTIONAL OPT. BRUSH) time. To change this parameter, contact a FIMAP service centre or refer to “MENÙ RESET DELAY (OPTIONAL OPT. BRUSH)” on page 51 in the "OPERATOR INTERFACE CONFIGURATION MANUAL" delivered with the machine documentation.

DRYING WORKING MODE

In the DRYING working mode, only the squeegee is in its working position, with the brush head remaining in its resting position. This working mode is used to dry the floor after having performed a pre-scrub.

ATTENTION: The drying without scrubbing operation (drying) should only be carried out if the machine was used beforehand to carry out a scrubbing without drying operation (pre-scrub).

To use the machine in drying working mode, do the following:

1. Carry out all the checks listed in the "WORK PREPARATION CHECKLIST" on page 60.
2. Sit on the driver's seat.
3. Insert the key (1) into the slot (2) on the right side of the column (**Fig.1**).
4. Turn on the machine and turn the key (1) a quarter turn clockwise (**Fig.2**).
5. When the control display is turned on, screens appear in sequence, the last of which contains the machine programming characteristics.

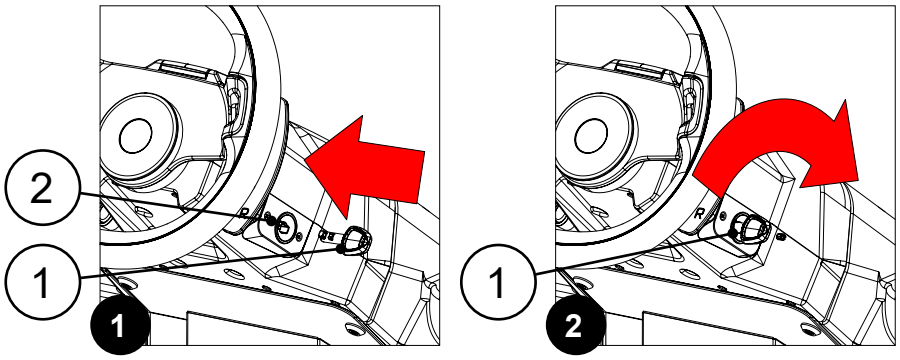

N.B.: when the machine is turned on, the TRANSFER working mode is enabled.

N.B.: the detergent solution performance levels is reset automatically.

6. The machine is now in the transfer working mode.
7. By selecting one of the working programs like ECO MODE; POWER MODE; or PROGRAM ZONE, the SCRUBBING MACHINE working mode will be enabled.

N.B.: for more information on the working program types, see "WORKING PROGRAMS" on page 63.

8. Let's take the ECO MODE working program as an example: press the button (3) on the control panel (**Fig. 3**).

N.B.: by selecting the ECO MODE working program on the control display (**Fig. 4**), the relative symbol (4) will appear at the bottom of the screen.

N.B.: by selecting the ECO MODE working program, the pre-set performance levels are automatically loaded, based on those selected on the function board parameters list.

9. Press the drive pedal (5) (**Fig.5**) to begin moving the machine.

N.B.: as soon as it is pressed, the brush head is automatically moved to the working position.

N.B.: as soon as the brush head reaches its working position, the brush head positioning LED (6) will light up on the control panel (**Fig. 3**).

N.B.: as soon as the drive pedal is pressed, the squeegee is automatically moved to the working position.

N.B.: as soon as the squeegee reaches its working position, the squeegee positioning LED (7) will light up on the control panel (**Fig. 3**).

N.B.: the brush motors; the solenoid valve, and the detergent solution pump only begin functioning once the brush head is in its working position.

N.B.: the suction motors are only activated once the squeegee is in its working position.

10. Press the BRUSH HEAD CONTROL button (8) on the control panel (**Fig.3**).

N.B.: as soon as the button (14) is pressed, the brush head is automatically moved to the working position.

N.B.: as soon as the brush head reaches its rest position, the brush head positioning LED (6) will turn off on the control panel (**Fig. 3**).

N.B.: as soon as the button (8) at the bottom of the control display (**Fig. 4**) is pressed, the ECO MODE working program symbol (4) will disappear.

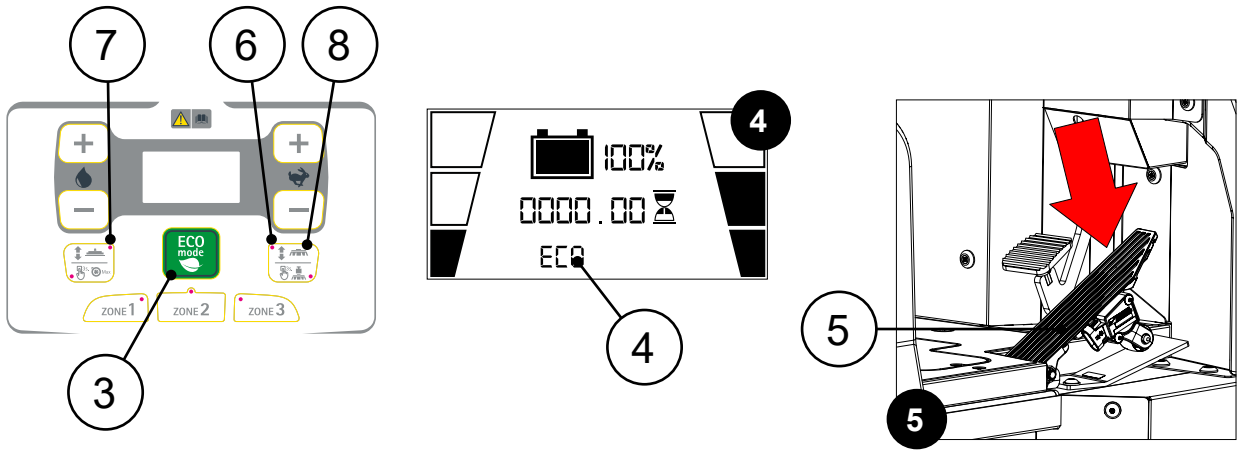

N.B.: if the machine is stopped and the drive pedal (5) released while working, the squeegee will automatically move to the intermediate position (raised off the floor) after the RESET DELAY (VACUUM VAC. MOT) time. To change this parameter, contact a FIMAP service centre or refer to “MENÙ RESET DELAY (VACUUM VAC. MOT)” on page 47 in the "OPERATOR INTERFACE CONFIGURATION MANUAL" delivered with the machine documentation.

N.B.: if the machine is stopped and the drive pedal (5) released while working, after a certain period of time, the suction motors will stop working; this operating delay is designed to allow the dirty solution present in the machine's vacuum system to be completely vacuumed up. To change this parameter, contact your nearest FIMAP service centre or send an email to service@fimap.com, or visit the website at www.fimap.com.

SWEEPING WORKING MODE (COMBINED VERSION)

The combined version is equipped with a sweeping brush head at the front of the machine.
The combined version enables waste collection operations to be performed at the same time as floor scrubbing operations, thus halving working time and costs.

N.B.: It is now no longer necessary to waste time sweeping before scrubbing, and to invest in two separate machines to perform the two actions separately.

N.B.: the combined version performs the work of a sweeping machine and a scrubbing machine in a single pass.

the sweeping brush head ensures efficient waste collection, keeping dust completely under control.

If it is necessary to use the side sweeping brush head during the work, press the SIDE BRUSH CONTROL switch (1), which is located in the membrane push-button panel (**Fig.1**).

N.B.: when the sweeping brush head is in its working position, the LED in the switch (1) will turn on.

N.B.: on pressing the switch (1), the sweeping brush head will start to move towards the floor.

N.B.: the gearmotors in the sweeping brush head will start to work at the same time.

N.B.: the suction motor in the debris hopper unit will start working when the sweeping brush head is in the working position.

N.B.: the front side brushes will move into the working position and will start working when the sweeping brush head is in the working position.

N.B.: if you want to bring the sweeping brush head back to its resting position, press the switch (1). When the side brush head is in its resting position, the LED in the switch (1) will turn off.

N.B.: if the drive pedal (2) is released when working (**Fig.2**), after a few seconds the sweeping brush head is automatically positioned in the rest position.

N.B.: if the drive pedal (2) is released when working (**Fig.2**), after a few seconds the vacuum motor in the debris hopper unit will switch off automatically.

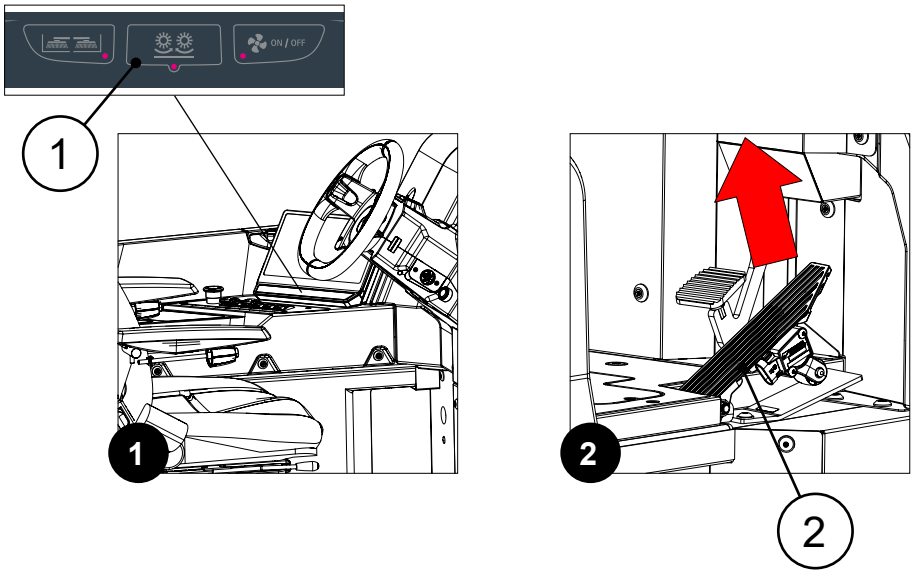

N.B.: for combined machine versions, if the machine is stopped and the drive pedal (5) released while working, the brush head will automatically move to the intermediate position (raised off the floor) after the RESET DELAY (BRUSHES SWEEP MOT) time. To change this parameter, contact a FIMAP service centre or refer to “MENÙ RESET DELAY (BRUSHES SWEEP MOT)” on page 39 in the "OPERATOR INTERFACE CONFIGURATION MANUAL" delivered with the machine documentation.

If you need to use the side brushes while working in scrubbing machine mode, press the SIDE BRUSHES CONTROL switch (1). The switch is on the membrane push-button panel (**Fig.1**).

N.B.: the side brushes are an indispensable accessory for conveying waste towards the centre of the machine, enabling the sweeping brush head to collect it.

N.B.: when the side brushes are in its working position, the LED in the switch (1) will turn on.

N.B.: by pressing the switch (1) the side brush holders will begin to move towards the floor.

N.B.: if you want to bring the side brushes back to their rest position, press the switch (1). When the side brushes are in its resting position, the LED in the switch (1) will turn off.

N.B.: if the drive pedal (2) is released when working (**Fig.2**), after a few seconds the side brush holders will be automatically positioned in the rest position.

N.B.: if the sweeping brush head is raised with the side brush holders in the working position, the side brush holders will also move into the rest position.

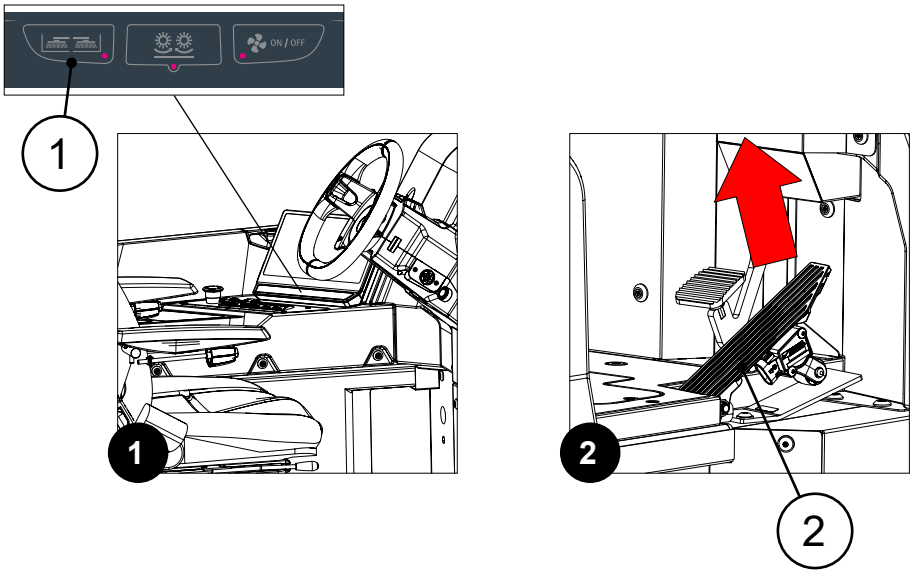

N.B.: if the machine is stopped and the drive pedal (5) released while working, the side brush head will automatically move to the raised position (raised off the floor) after the RESET DELAY (OPTIONAL OPT. SWEEP) time. To change this parameter, contact a FIMAP service centre or refer to “MENÙ RESET DELAY (OPTIONAL OPT. SWEEP)” on page 52 in the "OPERATOR INTERFACE CONFIGURATION MANUAL" delivered with the machine documentation.

STARTING WORK

By way of example, let's say we want to use the scrubbing machine working mode (i.e. scrubbing and drying the floor) with the ECO MODE working program. To begin the work activities, do the following:

1. Carry out all the checks listed in the “WORK PREPARATION CHECKLIST” on page 60.
2. Sit on the driver’s seat.
3. Insert the key (1) into the slot (2) on the right side of the column (**Fig.1**).
4. Turn on the machine and turn the key (1) a quarter turn clockwise (**Fig.2**).
5. After ignition, the display will show a series of screens in sequence. **Fig.3** shows the screen with the machine programming characteristics.

N.B.: the type of battery programmed for the battery control board is shown at the top of the screen (3) (**Fig.3**).
The total machine hours and partial machine hours meters are shown at the centre of the screen (4), on the upper and lower rows respectively (**Fig.3**).
The software version of the function board (SwF) and the software version of the display (SwD) are shown at the bottom of the screen (5), on the left and right hand sides respectively (**Fig. 3**).

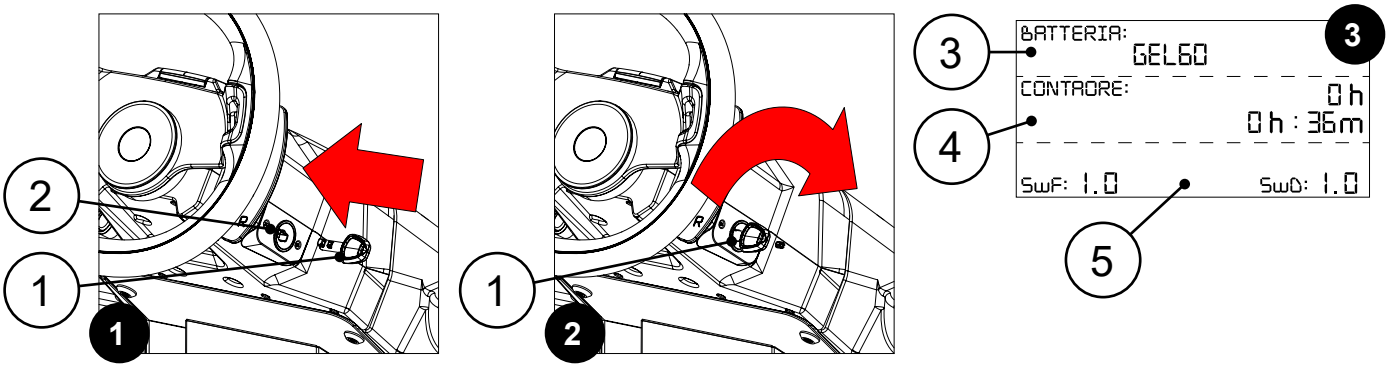

N.B.: the type of battery displayed (3) is the one selected in the list of function board parameters. To change the type of battery, contact a FIMAP service centre or refer to “MODIFICARE LA TIPOLOGIA DI BATTERIA DI ALIMENTAZIONE MACCHINA” on page 11 of the "OPERATOR INTERFACE CONFIGURATION MANUAL" delivered with the machine documentation.

N.B.: the hour meter shown in the control display (4) (**Fig.3**) is the one selected in the list of function board parameters. To change it, contact a FIMAP service centre or refer to “MENÙ VISUALIZED HMT (GENERAL HOURMETER)” on page 24 of the "OPERATOR INTERFACE CONFIGURATION MANUAL" delivered with the machine documentation.

N.B.: the work screen **Fig. 4** will appear after the screen containing the machine's programming characteristics. The detergent solution level is shown on the left side of the screen (6) (see “ADJUSTMENT OF THE DETERGENT SOLUTION FLOW” on page 83). The battery charge percentage and the hour meter are shown at the centre of the screen (7), on the upper and lower rows respectively (for more information, see “BATTERY BOX CHARGE LEVEL INDICATOR” on page 79). The machine's forward speed is shown on the right side of the screen (8) (see “REGULATING THE FORWARD SPEED” on page 83).

N.B.: when the machine is turned on, the TRANSFER working mode is enabled.

N.B.: the detergent solution performance levels is reset automatically.

6. The machine is now in the transfer working mode.
7. Press the button (9) on the control panel (**Fig. 5**) to activate the ECO MODE working program.

N.B.: by selecting the ECO MODE working program on the control display (**Fig. 6**), the relative symbol (10) will appear at the bottom of the screen.

N.B.: selecting the ECO MODE working programme automatically loads the performance levels that have been previously defined in accordance with those selected in the parameters list under the functions tab. To change the parameters of the working programme, contact your nearest FIMAP service centre or send an email to service@fimap.com or visit the website www.fimap.com

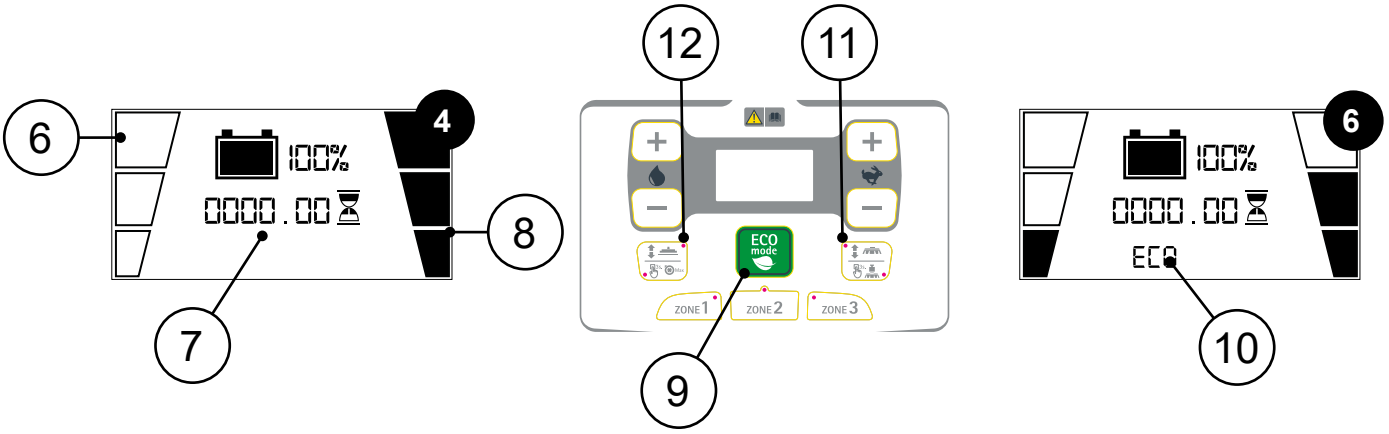

8. If the machine is equipped with the automatic detergent dosing system (FSS), press the switch (13) on the control panel (**Fig.7**), see “AUTOMATIC DETERGENT DOSING SYSTEM” on page 98.
   If the machine is equipped with the detergent solution continuous recycling system (FLR), press the switch (13) on the control panel (**Fig.7**), see “CONTINUOUS RECYCLING SYSTEM” on page 97.
9. If the work you want to perform is in a dimly lit environment, activate the working headlights by pressing the switch (14) on the control panel (**Fig.7**), see “WORKING HEADLIGHTS” on page 91.
10. If the machine is equipped with a side brush, press the switch (15) on the control panel (**Fig.7**), see “SIDE BRUSH (DISCOID SCRUBBING VERSION)” on page 95 for scrubbing versions or see “SIDE BRUSH (CYLINDRICAL SCRUBBING VERSION)” on page 96 for sweeping versions.
11. Press the drive pedal (16) (**Fig.8**) to begin moving the machine.

N.B.: as soon as the brush head and squeegee pedal is pressed, the brush head and squeegee are automatically moved to the working position.

N.B.: the brush motors; the solenoid valve, and the detergent solution pump only begin functioning once the brush head is in its working position.

N.B.: the suction motors are only activated once the squeegee is in its working position.

N.B.: if the machine is stopped and the drive pedal (16) released while working, the brush head will automatically move to the intermediate position (raised off the floor) after the RESET DELAY (BRUSHES BRUSH MOT) time. To change this parameter, contact a FIMAP service centre or refer to “MENÙ RESET DELAY (BRUSHES BRUSH MOT)” on page 35 in the "OPERATOR INTERFACE CONFIGURATION MANUAL" delivered with the machine documentation.

N.B.: if the machine is stopped and the drive pedal (16) released while working, the side brush head will automatically move to the raised position (raised off the floor) after the RESET DELAY (OPTIONAL OPT. BRUSH) time. To change this parameter, contact a FIMAP service centre or refer to “MENÙ RESET DELAY (OPTIONAL OPT. BRUSH)” on page 51 in the "OPERATOR INTERFACE CONFIGURATION MANUAL" delivered with the machine documentation.

N.B.: if the machine is stopped and the drive pedal (16) released while working, the squeegee will automatically move to the intermediate position (raised off the floor) after the RESET DELAY (VACUUM VAC. MOT) time. To change this parameter, contact a FIMAP service centre or refer to “MENÙ RESET DELAY (VACUUM VAC. MOT)” on page 47 in the "OPERATOR INTERFACE CONFIGURATION MANUAL" delivered with the machine documentation.

N.B.: if the machine is stopped and the drive pedal (5) released while working, after a certain period of time, the suction motors will stop working; this operating delay is designed to allow the dirty solution present in the machine's vacuum system to be completely vacuumed up. To change this parameter, contact your nearest FIMAP service centre or send an email to service@fimap.com, or visit the website at www.fimap.com.

12. The machine will now begin operating at maximum efficiency until the detergent solution is finished or the battery box runs flat.

N.B.: during the first metres of work, check that the quantity of solution dispensed is sufficient to wet the floor. If not, adjust the detergent solution flow, see paragraph “ADJUSTMENT OF THE DETERGENT SOLUTION FLOW” on page 83<?>.

N.B.: during the first meters of work, check that the squeegee dries the floor properly. If not, adjust it. See “ADJUSTING THE SQUEEGEE RUBBER BLADES” on page 148.

N.B.: during the first meters of work, check that the two side splash guards on the brush body properly convey the detergent solution on the floor towards the squeegee. If not, adjust them. See “ADJUSTMENT OF BRUSH HEAD SIDE SPLASH GUARD (DISCOID SCRUBBING VERSION)” on page 151.

N.B.: during the first meters of work, check that the two side splash guards on the brush body properly convey the detergent solution on the floor towards the squeegee. If not, adjust them. See “ADJUSTMENT OF BRUSH HEAD SIDE SPLASH GUARD (CYLINDRICAL SCRUBBING VERSION)” on page 152.

N.B.: pick up any large pieces of waste before performing the cleaning operations; pick up wire, tape, string, large pieces of wood, or any other types of refuse that could wrap around the brushes or become entangled.

N.B.: drive the machine along the most linear path possible. Avoid hitting any obstacles and scratching the sides of the machine. Overlap the working widths by several centimetres.

N.B.: avoid turning the steering wheel too sharply while the machine is in motion. The machine reacts quickly to the steering wheel's movements.

N.B.: adjust the machine speed, the brush pressure and the flow of the solution based on the type of cleaning to be carried out.

N.B.: The machine's service brake pedal (17), which is used to stop the machine when required (**Fig.9**), is located to the right of the footboard.

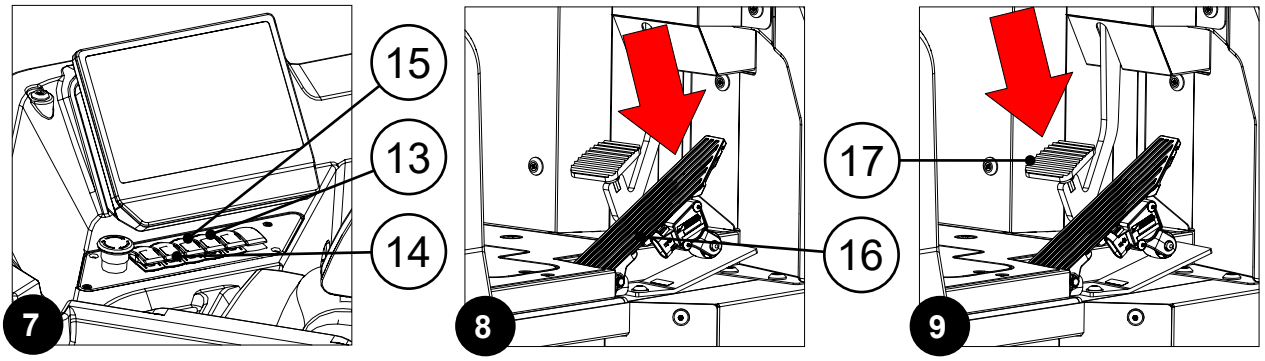

N.B.: when the service brake pedal (17) is pressed, the red rear lights become brighter to indicate that the service brake pedal has been pressed.

N.B.: the machine has an encoder to assist with braking, as well as a mechanical brake. If the machine is moving and the accelerator pedal (16) is released, the machine brakes, decelerating gently, until it stops the encoder. Only when the encoder has stopped is the electric brake engaged. If the machine is moving and the brake pedal (17) is pressed, the machine brakes according to the braking force of the mechanical system. Only when the encoder has stopped is the electric brake engaged.

N.B.: upon request, the machine is equipped with an anti-collision system which, upon detection of obstacles or other vehicles, will perform a controlled emergency braking, see “ANTI-COLLISION SYSTEM” on page 94.

ATTENTION: when the ALARM 15 appears on the main screen, it means that the oil level in the braking system is low; stop the machine and contact your nearest FIMAP service centre or send an email to service@fimap.com, or visit the website www.fimap.com

N.B.: Drive the machine slowly on inclines and descents. Use the brake pedal to control the machine speed. Where there is a slop, carry out the scrubbing by moving the machine upwards rather than downwards.

ATTENTION: slow down on ramps and slippery surfaces.

ATTENTION: do not use the machine in areas where the ambient temperature is higher than 43°C (110°F). Do not use the scrubbing functions in areas where the ambient temperature is less than freezing 0°C (32°F).

ATTENTION: in working mode, the machine can only drive on ramps not exceeding 25%; while in scrubbing machine working mode (with GVW weight), it can work on slopes not exceeding 20%.

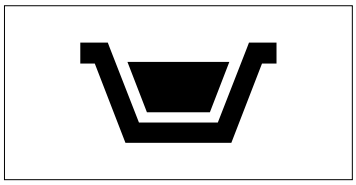

N.B.: if during work the recovery tank is filled up to the criticality threshold, the critical level symbol shown opposite will appear on the main screen, to continue working see “OVERFLOW DEVICE” on page 80, the symbol will disappear as soon as the recovery tank is emptied.

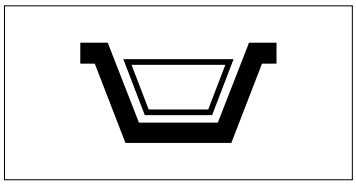

N.B.: if during the work the detergent solution present in the solution tank runs out, the critical level symbol shown opposite will appear on the main screen. To continue working, read “DETERGENT SOLUTION” on page 47, the symbol will disappear as soon as the solution tank is filled.

BATTERY BOX CHARGE LEVEL INDICATOR

The control display is located on the machine control panel. The central part of the screen displays the battery box charge percentage on the upper row (1) (**Fig.1**).
The battery box charge percentage indicator consists of two charge level symbols, the first being a graphic symbol (2), and the second being a number indicating the charge percentage (3) (**Fig.2**).

N.B.: the control display shows the batteries' charge percentage with respect to their maximum capacity, and the function board transforms the batteries' voltage value into a percentage value.

N.B.: the graphic symbol (2) consists of five charge levels, each of which represents approximately 20% of residual battery charge.

N.B.: with a residual charge of 20%, the graphic symbol starts to flash. After a few seconds, it appears larger at the centre of the screen (**Fig.3**); at this point, the machine must be taken to the designated battery box recharging station.

N.B.: a few seconds after the battery box charge level reaches 20%, the brush motor switches off automatically. The remaining charge is sufficient for completing the drying task before recharging the battery box.

N.B.: a few seconds after the battery charge level reaches 10%, the suction motor switches off automatically. With the remaining charge, it is still possible, however, to move the machine to the designated battery box recharging station.

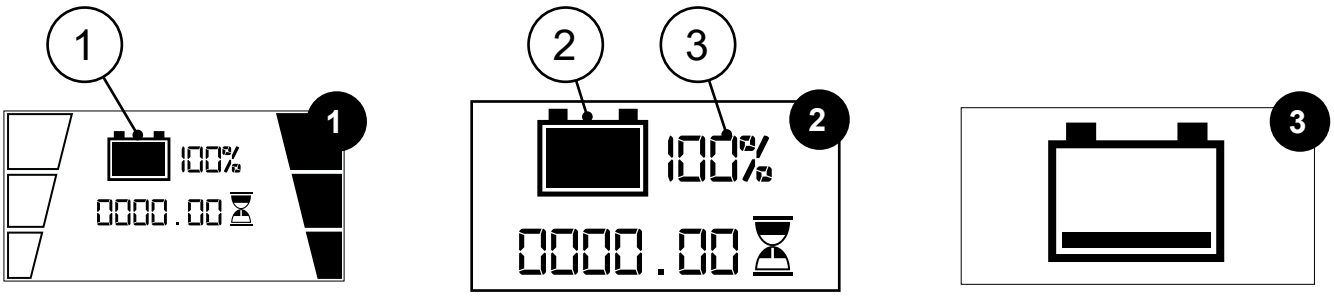

HOUR METER

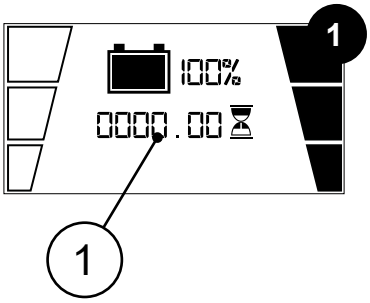

The control display is located on the machine control panel. The central part of the screen displays the hour meter on the upper row (1) (**Fig.1**).
The hour meter (1) allows the user to view the machine's total time of use via a series of numbers.

N.B.: the digits preceding the (“.”) identify the hours, while the digits that come after the “.” identify the tenths of an hour, a tenth of an hour corresponds to six minutes.

OVERFLOW DEVICE

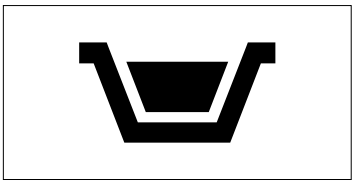

The machine is equipped with an overflow device, when the solution level inside the recovery tank reaches a critical level, the icon will appear here on the control display to the side. As soon as the alarm appears, do the following:

1. Stop the machine.
2. Set the machine to TRANSFER mode, see "TRANSFER WORKING MODE" on page 66.
3. Take the machine to the designated maintenance area.
4. Perform the recovery tank emptying procedure. See "DRAINING THE RECOVERY TANK" on page 116.

EMPTYING THE DEBRIS HOPPER (CYLINDRICAL VERSION)

When cleaning the floor, if you notice that the machine can no longer collect the dirt from the floor, this could be due to the debris hopper in the scrubbing brush head being full.
The careful cleaning of the debris hopper in the scrubbing brush head will ensure better floor cleaning, thus decreasing costs while at the same time improving environmental sustainability and performance.

To empty the debris hopper, proceed as follows:

1. Take the machine to the maintenance area.

N.B.: the place designated for this operation must comply with current regulations concerning safety at work and current environmental protection regulations.

2. Sit on the driver's seat.
3. Insert the key (1) into the slot (2) on the right side of the column (**Fig.1**).
4. Turn on the machine and turn the key (1) a quarter turn clockwise (**Fig.2**).
5. Press the button (3) on the control panel (**Fig.3**) to activate the MAINTENANCE POSITION function - see "MAINTENANCE POSITION FUNCTION" on page 85.

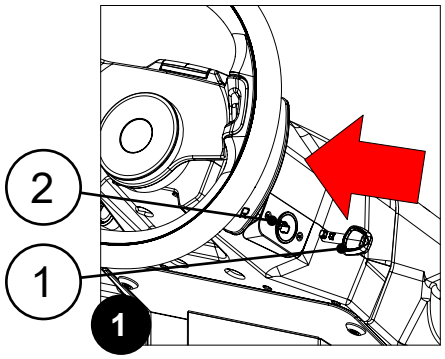

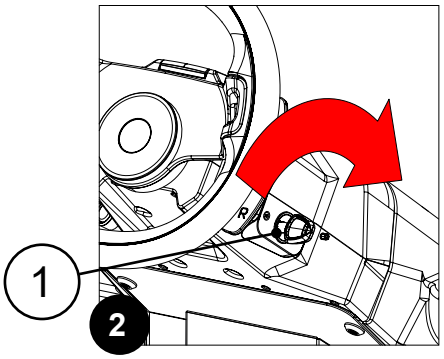

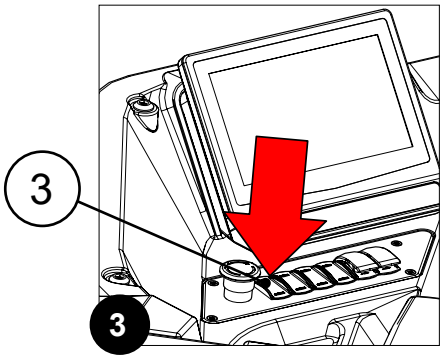

6. Open the left inspection door (4) (**Fig.4**).
7. Remove the debris hopper from the machine using the handle (5); before moving the hopper, remember to release the debris hopper latch (6) (**Fig.5**).
8. Move the debris hopper in the place used for waste disposal using the handle (5).

N.B.: the place designated for this operation must comply with current regulations concerning safety at work and current environmental protection regulations.

9. Clean the inside of the debris hopper with a stream of running water, using a brush to remove any dirt residues if necessary.
10. Take out the debris hopper vacuum filter (7) (**Fig.6**), clean it with a jet of water, and if necessary use a scraper to remove any residues of dirt.

11. Proceed in the opposite order to reassemble all the parts.

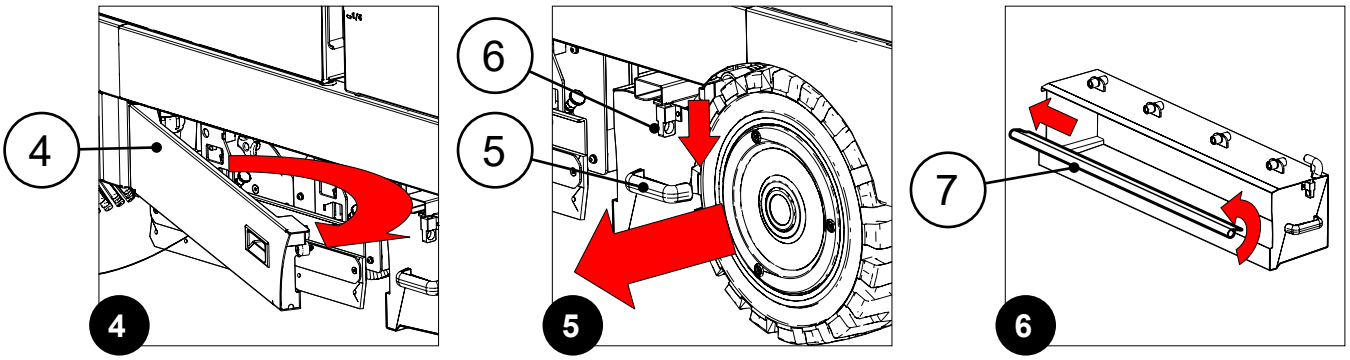

EMPTYING THE DEBRIS HOPPER (COMBINED VERSION)

When cleaning the floor, if you notice that the machine can no longer collect the dirt from the floor, this could be due to the debris hopper in the scrubbing brush head being full.

To empty the debris hopper, proceed as follows:

1. Take the machine to the designated waste disposal area.

N.B.: the place designated for this operation must comply with current regulations concerning safety at work and current environmental protection regulations.

2. Bring the front of the machine close to the waste container.

WARNING: calculate the distance between the machine and the waste container correctly, bearing in mind the rotation radius of the debris hopper when moving.

3. Activate the filter shaker by pressing the "FILTER SHAKER CONTROL" button (1) on the control panel (**Fig.1**).

ATTENTION: Do not keep the switch (1) pressed longer than ten seconds; repeat this operation two or three times.

4. Raise the debris hopper into the emptying position, press the "MOVE THE DEBRIS HOPPER UPWARDS" button (2) on the control panel (**Fig.1**).
5. Bring the machine close to the waste container, so that the debris hopper is inside the container opening, and move closer to the waste container.

WARNING: reduce the machine movement speed when the debris hopper is lifted off the ground.

WARNING: avoid moving the machine on a slope when the debris hopper is lifted off the ground.

WARNING: do not activate the filter shaker while the debris hopper is lifted off the ground.

6. Once in waste emptying position, stop the machine and rotate the debris hopper into the emptying position, press the "ROTATE DEBRIS HOPPER" button (3) on the control panel (**Fig.1**).

N.B.: as soon as the debris hopper begins to rotate, the debris will begin to come out.

7. Once the debris has been completely unloaded, rotate the debris hopper into the working position, release the button (3).

N.B.: on releasing the button (3), the machine will automatically bring the debris hopper into the loading position.

8. Move the machine away from the waste container.

WARNING: reduce the machine movement speed when the debris hopper is lifted off the ground.

WARNING: calculate the distance between the machine and the waste container correctly, bearing in mind the rotation radius of the debris hopper when moving.

9. Lower the debris hopper, whilst simultaneously pressing the “MOVING THE DEBRIS HOPPER DOWNWARDS” button (4), which is located on the control panel (**Fig.1**), and the “OPERATOR PRESENT” button (5) which is located on the left-hand side of the steering column (**Fig.2**).

N.B.: If the debris hopper is not rotated fully into the loading position before being lowered into the working position, the machine will automatically stop lowering when it reaches the safety position. The lowering of the debris hopper into the working position will only continue when the debris hopper is fully rotated into the loading position.

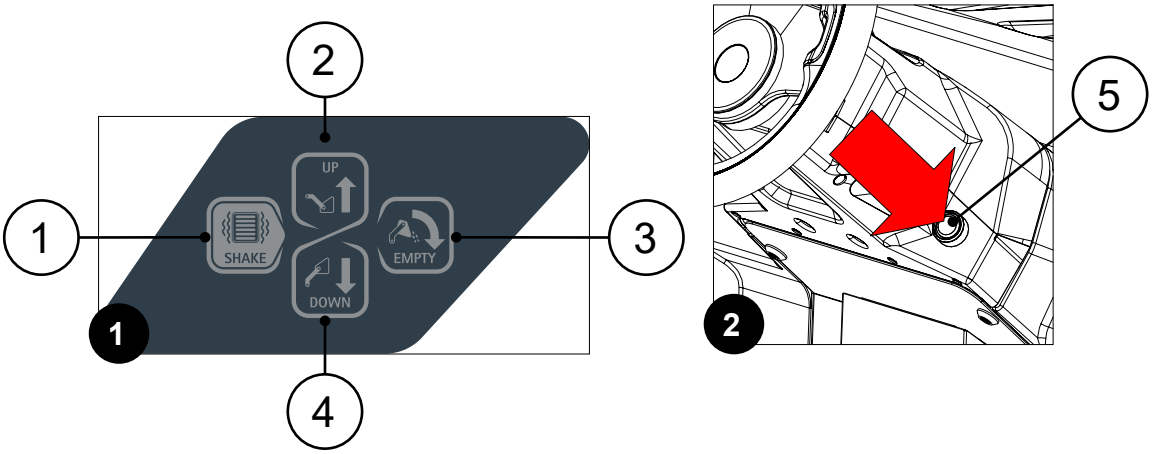

N.B.: the machine only allows rotation of the debris hopper into the unloading position at a height that is considered safe for the machine.

ADDITIONAL FUNCTIONS

ADJUSTMENT OF THE DETERGENT SOLUTION FLOW

To adjust the flow of detergent solution during work, proceed as follows:

1. During the first few working meters check that the amount of solution is sufficient to wet the floor, but not excessive to exit the splash guard.
2. To adjust the flow of the detergent solution, press the buttons “+” and “-” (1) located on the control panel (**Fig.1**).

N.B.: the flow of detergent solution on the brush can be adjusted to one of four levels, from 0 to 3. The level is shown with the symbol (2) on the control display (**Fig.2**). To change the values relating to the amount of detergent solution in the machine's water system, refer to “MENÙ PUMP LEVEL (PUMP WATER)” on page 44 of the "OPERATOR INTERFACE CONFIGURATION MANUAL" delivered with the machine documentation.

N.B.: each press of the button (1) cyclically increases the level of detergent solution in the machine's water system.

N.B.: If the flow is set to 0, there is no emission of detergent solution.

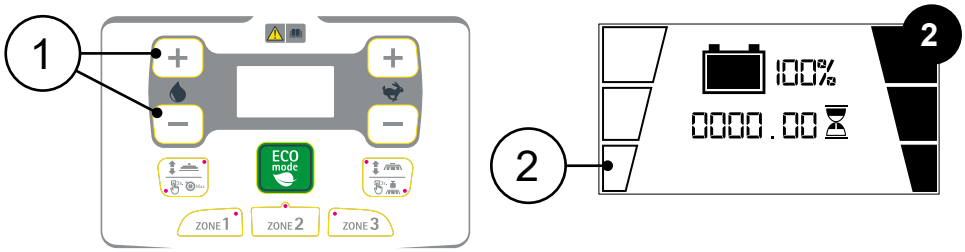

REGULATING THE FORWARD SPEED

To adjust the machine's forward speed, do the following:

1. During the first few metres, check that the forward speed is adequate to the grip conditions.
2. To adjust the forward speed, press the buttons “+” and “-” (1) on the control panel (**Fig.1**).

N.B.: the forward speed can be adjusted to three levels, from minimum 1 to maximum 3. The set level is shown by the symbol (2) on the main screen (**Fig. 2**). To change the values relating to the forward speed of the machine, refer to “MENÙ SPEED LEVEL (TRACTION SPEED SETS)” on page 60 of the "OPERATOR INTERFACE CONFIGURATION MANUAL" delivered with the machine documentation.

N.B.: each press of the button (1) cyclically increases the speed level.

N.B.: the forward speed of the machine can be adjusted by pressing the pedal (3) more or less (**Fig.3**). The more you press, the higher the speed (within the limits of the level selected beforehand).

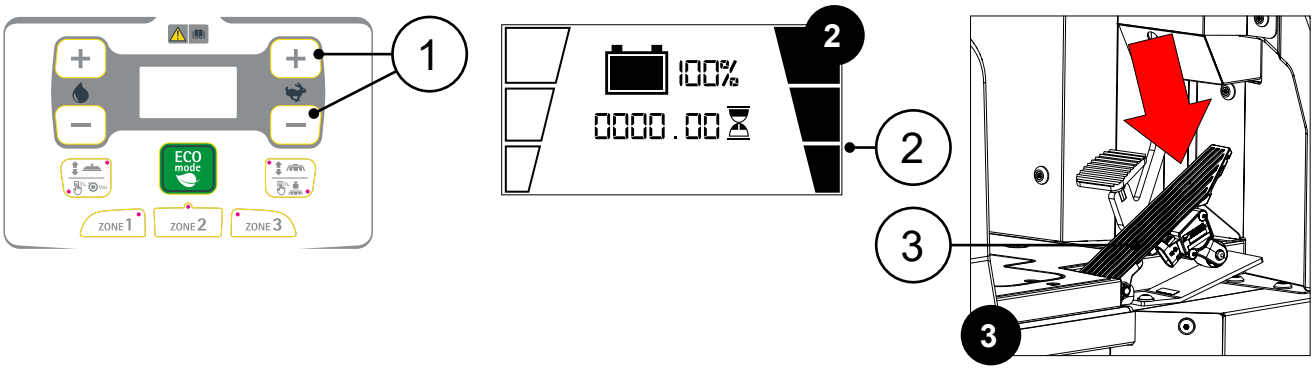

EXTRA BRUSH HEAD PRESSURE

This machine can increase the pressure exerted on the brush during the work cycle. To do this:

While working in PRE-SCRUBBING or SCRUBBING MACHINE mode, and therefore with the brush head in contact with the floor, press the "BRUSH HEAD CONTROL" button (1) on the control panel for at least three seconds (**Fig.1**).

N.B.: As soon as the extra pressure function is activated, the relative LED (2) will light up on the control panel (**Fig.1**).

N.B.: As soon as the extra pressure function is activated, the symbol (3) “EXTRA BRUSH HEAD PRESSURE ACTIVE (**Fig.2**) will appear on the control display panel.

N.B.: To deactivate the brush head extra-pressure function, press the button (1) on the control panel again for at least three seconds (**Fig.1**).

N.B.: As soon as the extra pressure function is deactivated, the relative LED (2) will turn off on the control panel (**Fig.1**).

N.B.: As soon as the extra pressure function is deactivated, the symbol (3) “EXTRA BRUSH HEAD PRESSURE ACTIVE (**Fig.2**) will disappear from the control display panel.

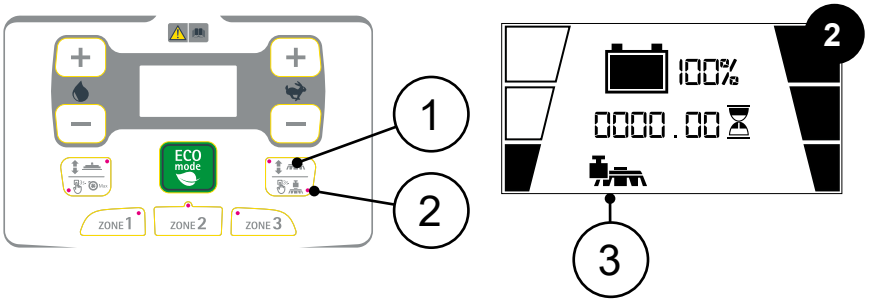

NOISELESS SUCTION

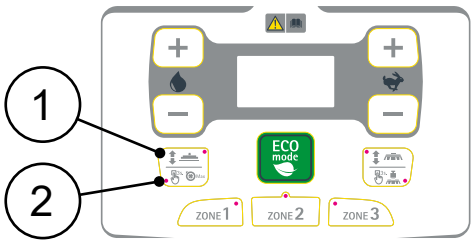

This machine can reduce the noise level generated by the vacuum process during the work cycle. To do this:

While working in SCRUBBING MACHINE or VACUUM mode, and therefore with the squeegee in contact with the floor, press the "SQUEEGEE CONTROL" button (1) on the control panel for at least three seconds (**Fig.1**).

N.B.: As soon as the noiseless suction function is activated, the relative LED (2) will turn off on the control panel (**Fig.1**).

N.B.: To deactivate the noiseless suction function, press the button (1) on the control panel again for at least three seconds (**Fig.1**).

N.B.: As soon as the noiseless suction function is deactivated, the relative LED (2) will light up on the control panel (**Fig.1**).

BUZZER

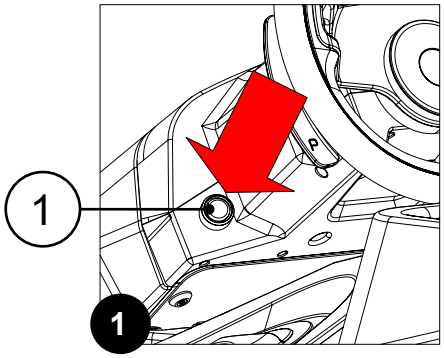

The machine is equipped with a buzzer. if you need to sound a warning, just press the button (1) on the steering column (**Fig.1**).

MAINTENANCE POSITION FUNCTION

The machine is equipped with a button that activates the maintenance position function, when it is necessary to automatically position both the brush head and the squeegee in the rest position raised from the floor. To activate the function, proceed as follows:

1. Sit on the driver's seat.
2. Insert the key (1) into the slot (2) on the right side of the column (**Fig.1**).
3. Turn on the machine and turn the key (1) a quarter turn clockwise (**Fig.2**).
4. Press the MAINTENANCE POSITION button (3) on the control panel (**Fig.3**).

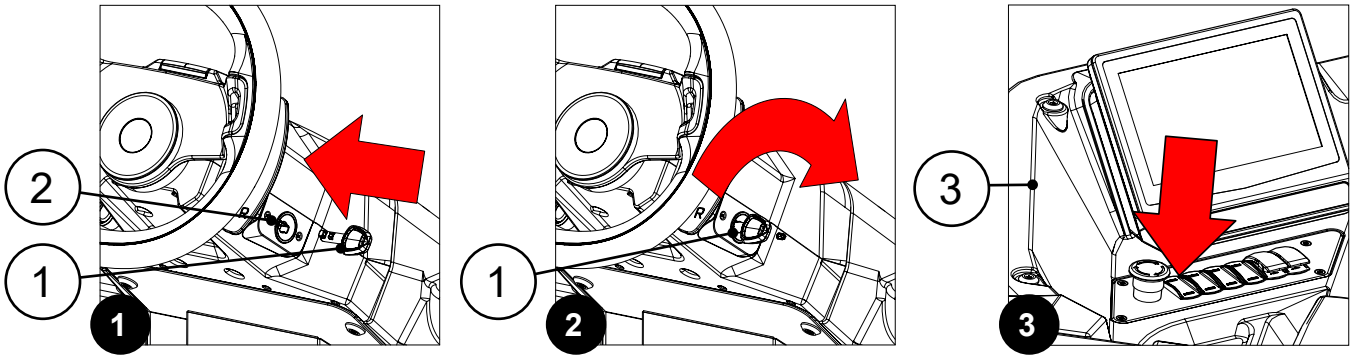

N.B.: once the maintenance position sequence has been activated, it is not possible to activate other functions or move the machine.

CAUTION: make sure that no people or objects are in the machine's vicinity during this operation.

BRUSH UNCOUPLING FUNCTION (DISCOID SCRUBBING VERSION)

The machine is equipped with a button that activates the brush uncoupling function, when it is necessary to carry out maintenance or replace the brushes in the brush head. To activate the function, proceed as follows:

1. Sit on the driver's seat.
2. Insert the key (1) into the slot (2) on the right side of the column (**Fig.1**).
3. Turn on the machine and turn the key (1) a quarter turn clockwise (**Fig.2**).
4. Press the MAINTENANCE POSITION button (3) on the control panel (**Fig.3**).

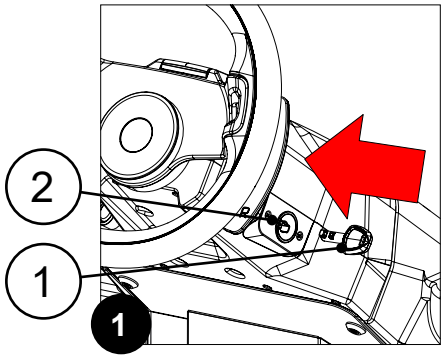

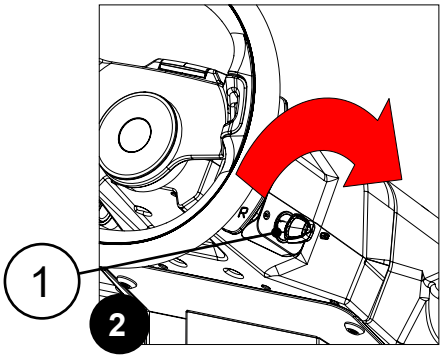

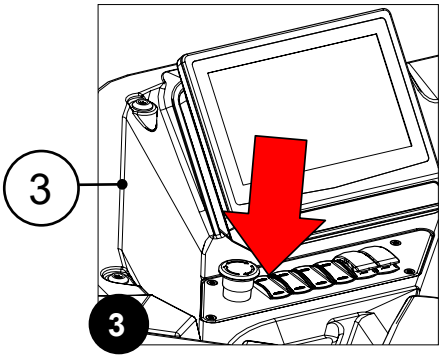

N.B.: once the maintenance position sequence has been activated, it is not possible to activate other functions or move the machine.

CAUTION: make sure that no people or objects are in the machine's vicinity during this operation.

5. Wait until both the brush head and the squeegee have moved into the maintenance position.
6. Press the BRUSH UNCOUPLING button (3) on the control panel for at least three seconds (**Fig.3**).
7. The machine will automatically perform the BRUSH UNCOUPLING function.

N.B.: once the brush uncoupling sequence has been activated, it is not possible to activate other functions or move the machine.

CAUTION: make sure that no people or objects are in the machine's vicinity during this operation.

ALARM SCREEN

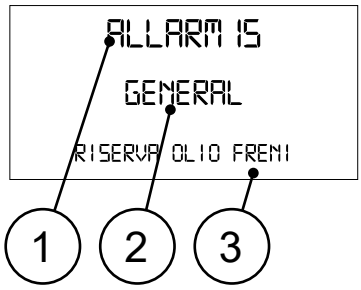

If an error occurs, the control display will show the corresponding alarm screen; the screen will remain visible until the error has been resolved. This screen describes:

- the alarm number (1).
- the group it belongs to (2).
- a brief description (3).

When an error occurs, do as follows:

1. Stop the machine immediately.
2. Shut off the machine by turning the main switch to its “0" position, and turn the key (4) a quarter turn anti-clockwise (**Fig.1**).
3. Wait at least ten seconds, then turn the machine on by turning the main switch to its "I" position, and turn the key (4) a quarter turn clockwise (**Fig.2**).
1. If the error persists, contact your nearest FIMAP service centre or send an email to service@fimap.com or visit the website at www.fimap.com

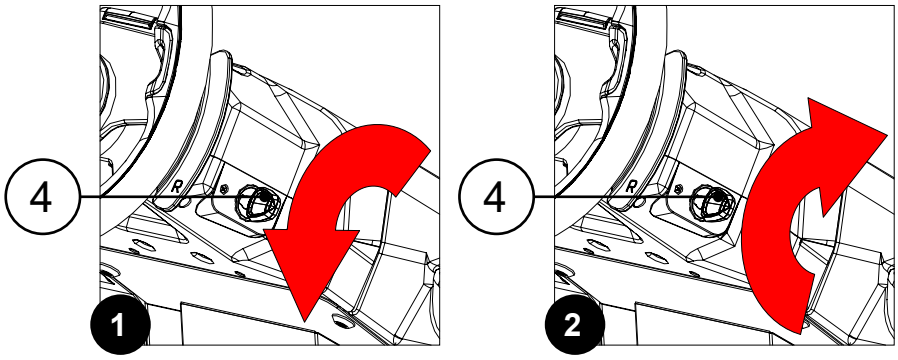

N.B.: the error screen will remain visible until the error has been resolved.

N.B.: if the machine is equipped, upon request, with the automatic SOS device, perform the procedure to send a request for intervention, see “SOS DEVICE” on page 93.

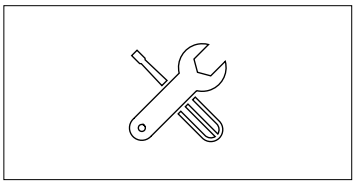

WARNING: if when using the machine the OVERDUE SCHEDULED MAINTENANCE alarm appears (represented by the figure shown here to the side), contact your nearest FIMAP service centre or send an email to service@fimap.com or visit the website www.fimap.com to schedule the maintenance.

N.B.: the scheduled maintenance alarm will remain visible for the period of time identified by the "Service Time" parameter, after which the alarm screen will automatically switch off.

N.B.: if the scheduled maintenance is overdue, each time the machine is switched on, the alarm for this will appear on the control display for the period of time identified by the "Service Time" parameter, after which the alarm screen will automatically switch off.

N.B.: the overdue scheduled maintenance alarm can only be reset by a service technician at the FIMAP service centre.

EMERGENCY BUTTON

The machine is equipped with an emergency button. If any problems are encountered during the work activities, do the following:

1. Press the emergency button (1) on the control panel (**Fig.1**).

CAUTION: this command interrupts the electrical circuit that goes from the batteries to the machine system.

2. Once the machine has stopped, turn the main switch to its “0" position by turning the key (2) a quarter turn anti-clockwise (**Fig.2**).

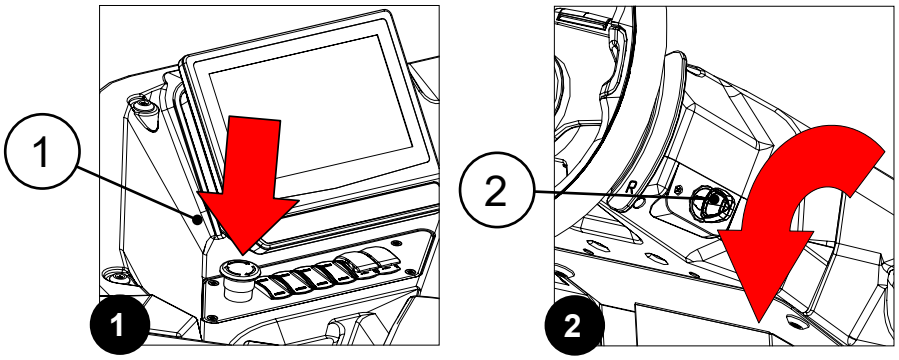

3. Disengage the emergency button (1) by turning it in the direction indicated by the arrows printed on it.
4. Eliminate the anomaly that caused the problem.

N.B.: If the anomaly persists, contact a technician at the FIMAP service centre.

5. Carry out all the procedures for turning on the machine.

BRAKING CONTROL

The machine has an encoder to assist with braking, as well as a mechanical brake. If the machine is moving and the accelerator pedal (1) (**Fig.1**) is released, la the machine brakes, decelerating softly, until it stops the encoder.

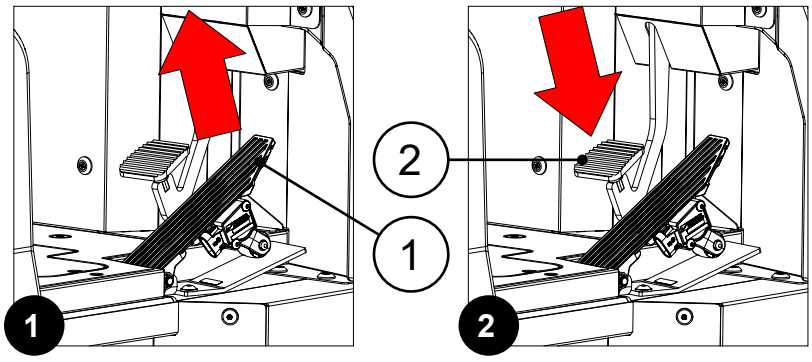

N.B.: If the machine is moving and the brake pedal (2) (**Fig.2**) is pressed, the machine brakes with the braking force applied by the mechanical system.

WARNING: Only when the encoder has stopped is the electric brake engaged.

REVERSE GEAR

The machine is equipped with electronic traction control. To engage the reverse gear, do the following:

1. Stop the machine.
2. Engage the “REVERSE GEAR ACTIVATION/DEACTIVATION” lever (1) underneath the steering wheel (**Fig.1**).
3. Press the drive pedal (2) (**Fig.2**) to start the machine moving in reverse.

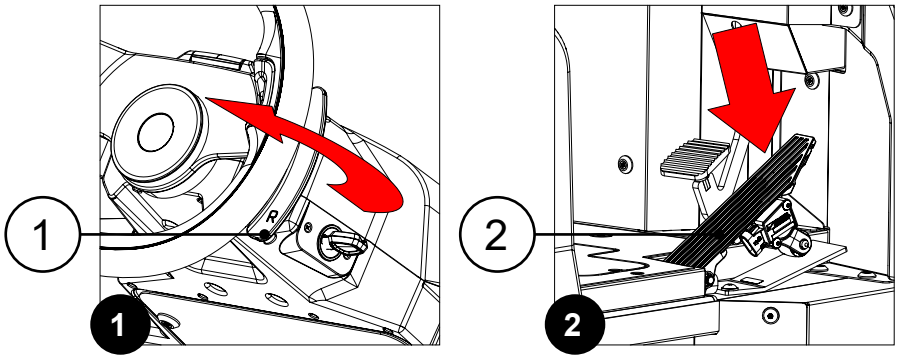

CAUTION: the speed in reverse is lower than the speed of the machine in forward gear, in order to comply with occupational safety regulations; to change the speed in reverse, see “MENÙ MAX SPEED BACKWARD (TRACTION PAR. CHANGE)” on page 58 of the "OPERATOR INTERFACE CONFIGURATION MANUAL" delivered with the machine documentation.

N.B.: in order to disengage the reverse gear, move the lever (1) underneath the steering wheel again.

N.B.: Once the lever has been engaged (1), the acoustic signalling device will be activated in order to signal that the machine's reverse gear has been engaged.

N.B.: if you reverse with the squeegee in the working position, as soon as you press the drive pedal, the machine will start to move backwards and the squeegee will lift off the floor; to change the reset delay time relating to the squeegee control actuator, see “MENÙ TRACTION REVERSE DELAY (ACTUATOR SQUEEGE)” on page 55 of the "OPERATOR INTERFACE CONFIGURATION MANUAL" delivered with the machine documentation.

N.B.: If reverse is engaged with the brush head in its working position, once the drive pedal is pressed, the machine will begin to move in reverse and the brush head will remain in its working position, but the solenoid valve will stop dispensing detergent solution to the brushes.

N.B.: if you reverse with the side brush head in the working position, as soon as you press the drive pedal, the machine will start to move backwards and the side brush head will return to the rest position; to change the reset delay time for the side brush head control actuator, see “MENÙ RESET DELAY (VACUUM VAC. MOT)” on page 47 of the "OPERATOR INTERFACE CONFIGURATION MANUAL" delivered with the machine documentation.

SIDE BRUSH (COMBINED VERSION)



The combined version of the machine is equipped with two side brushes.
The side brushes are an essential tool when the areas to be cleaned feature shelves or other similar furniture.
The side brushes are able to extend beyond the total width of the machine, thus being able to clean flush with the wall and pass under shelves. In this way the entire room is cleaned in a single passage, and nothing is left behind.
If you need to use the side brushes while working in sweeping machine mode, press the SIDE BRUSHES CONTROL icon (1). The icon can be found on the brush control membrane push-button panel (**Fig.1**).

N.B.: when the side brush holders are in the working position, the LED (2) will come on.

N.B.: by pressing the icon (1) the side brush holders will begin to move towards the outside of the machine.

N.B.: the gearmotors in the side brush supports will start working simultaneously with the gearmotors in the brush head.

N.B.: if you want to bring the side brush holders back to their rest position, press the icon (1). When the side brush supports are in the rest position, the LED (2) will turn off.

N.B.: if the drive pedal (2) is released when working (**Fig.2**), after a few seconds the side brush holders are automatically positioned in the rest position.

N.B.: if the brush head is raised with the side brush holders in the working position, the side brush holders will also move into the rest position.

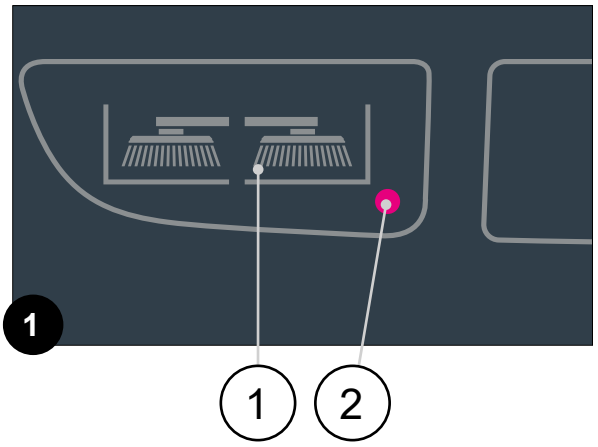

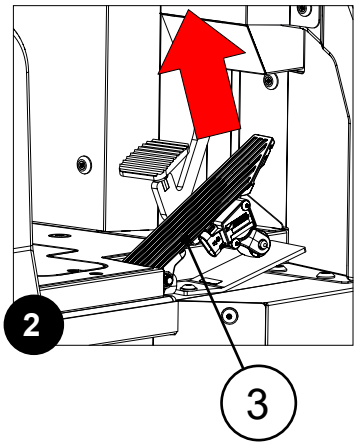

OPTIONAL FUNCTIONS

SERVICE LIGHTS

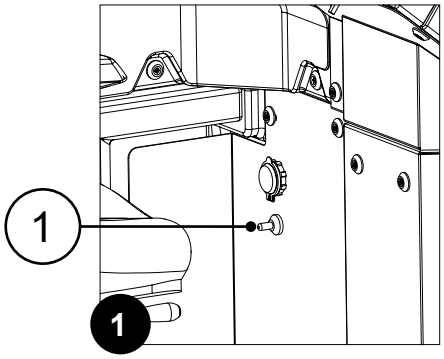

Upon request, the machine can be equipped with the exclusive service lights pack.
The service lights package offers increased visibility of the parts which could require operator inspection, illuminating the relative zones with LED lights.

To activate the service lights, use the switch (1) under the control panel (**Fig.1**). This switch has three working positions:

• ON: set the switch to this position when you want the service lights to remain on, regardless of the status of the microswitches in the various doors.

- OFF: set the switch to this position when you want the service lights to remain off.
- AUTOMATIC: set the switch to this position when you want the service lights to only turn on when the microswitches in the various doors are engaged.

WORKING HEADLIGHTS

Upon request, the machine can be equipped with front and rear lights. When the machine is turned on using the ignition switch (1), located on the right side of the steering column (**Fig.1**), the front position lights and the tail lights will turn on.
To activate the front working lights, use the switch (2) on the control panel (**Fig.2**).

N.B.: when the working headlights are in function, the LED in the switch (2) will be on.

N.B.: if you want to turn off the working headlights, press the switch (2), when the working headlights are turned off, the LED in the switch will be off.

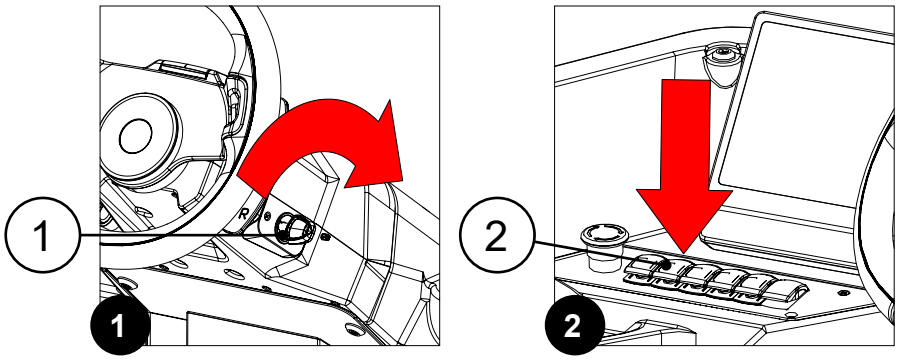

N.B.: to manage the HAZARD LIGHTS function, refer to “MENÙ HAZARD LIGHTS (GENERAL CONFIG)” on page 31 of the "OPERATOR INTERFACE CONFIGURATION MANUAL" delivered with the machine documentation.

N.B.: If the HAZARD LIGHTS function is active, during use of the machine with the working headlights on, the front and rear LED lights will operate in flashing mode.

BLUE SAFETY LIGHT



On request, the machine can be equipped with a blue safety spotlight above the front dashboard; the purpose of this light is to warn pedestrians of the approach of the machine.
The device is suitable for both indoor and outdoor applications.
It is ideal for use inside warehouses or on forecourts, where architectural structures, furniture or storage racks can prevent full visibility of the moving machine.

N.B.: The blue light safety system increases the overall level of safety by making the vehicle visible when in motion.

N.B.: this system makes it possible to reduce risks in areas where vehicles and people cross over when the machine is in motion.

N.B.: a blue light is projected onto the ground, warning of the machine's approach and signalling in advance that it will be passing through the area.

N.B.: the blue safety light is connected to the machine main switch.

USB PORT

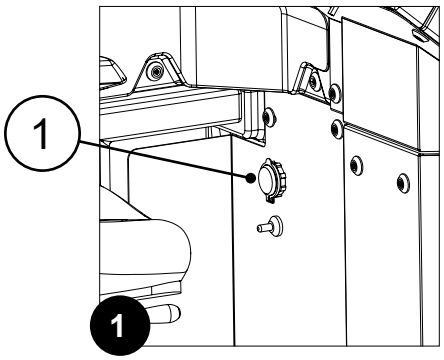

The machine is equipped with two USB ports (1), positioned under the control panel (**Fig.1**), which can be used for recharging electrical devices, such as mobile phones or tablet computers.

SOS DEVICE

Upon request, the machine can be equipped with an automatic SOS device that allows the user to automatically request technical assistance. When the SOS button is pressed, the machine sends a report directly to the Designated Authorised Workshop (valid only for those who have signed up for one of the service agreements), which will immediately perform a diagnostic check on the machine to determine the type of fault encountered. The SOS device can reduce waiting times for maintenance and machine downtime, thus increasing productivity.
To activate the SOS device, do the following:

1. When an anomaly occurs, stop the machine.
2. Open the door (1) covering the SOS button, located near the steering wheel (**Fig.1**).
3. Press the SOS button (2) (**Fig.2**).

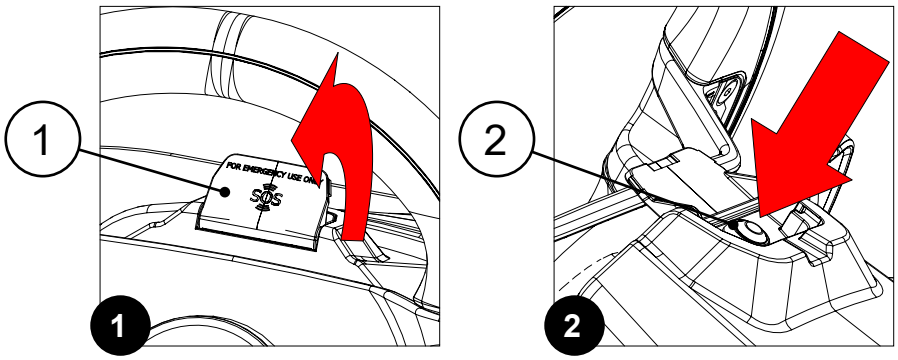

N.B.: In order to activate the SOS device, the machine must be equipped with the automatic fleet management kit (FFM).

N.B.: in order to send a technical assistance request the machine needs to be on and should be in a zone with data traffic coverage.

TAG INSERTION



Upon request, the machine can be equipped with an integrated system that allows the machine fleet to be fully monitored. In order to check that the machines are carrying out the planned work activities correctly, one would always have to be present at the work site. The automatic fleet management system (FFM) allows the status of each machine, the workload, the consumption values, and the maintenance requirements to be constantly monitored, thus ensuring improved fleet management and reduced costs. The FFM system is connected to the data network, which in turn transfers all the information that the user wants to know about each machine in their fleet, in real time.

To activate automatic fleet management data logging, do the following:

1. Sit on the driver's seat.
2. Insert the key (1) into the slot (2) on the right side of the column (**Fig.1**).
3. Turn on the machine and turn the key (1) a quarter turn clockwise (**Fig.2**).

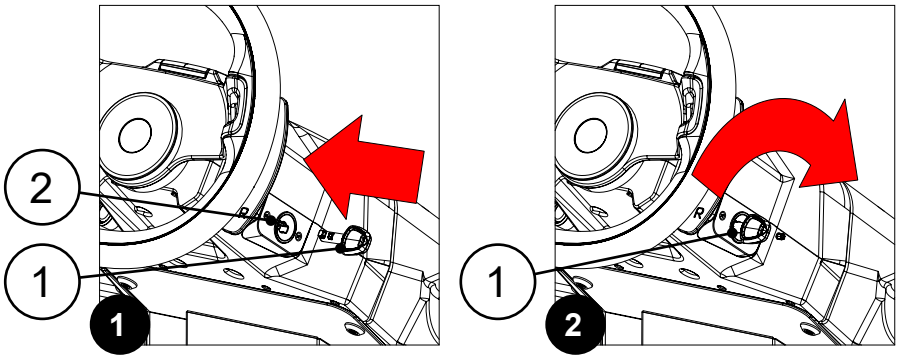

N.B.: If the key just inserted is not equipped with a TAG, the alarm 10 will appear on the control display (**Fig.3**).

N.B.: If the owner of the TAG just inserted is not enabled to use it, the AL_11 alarm will appear on the control display (**Fig.4**).

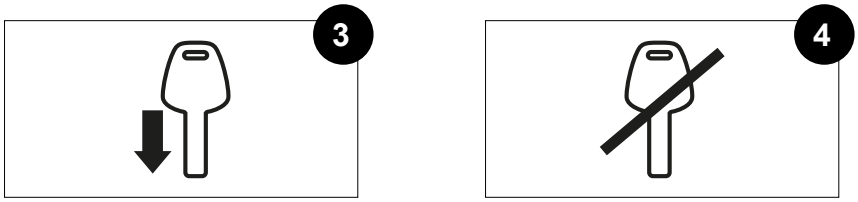

4. The machine is now in the transfer mode.
5. To begin the work operations, see the “STARTING WORK” on page 75.

ANTI-COLLISION SYSTEM



On request, the machine can be equipped with an anti-collision system.
The anti-collision system consists of obstacle detectors mounted on the front and rear of the machine.
The anti-collision system continuously emits infrared pulses, which are reflected on the obstacles they encounter and return back to a receiving antenna mounted in the said "radar". A special software, based on the speed of the vehicle and the distance from the obstacle, judges whether it can constitute a danger, in this case the system activates an audible alarm that varies as the distance of the obstacle varies.

N.B.: when reversing, the anti-collision sensors manage the special function that modulate the ON/OFF frequency of the buzzer.

N.B.: when moving forwards, the anti-collision sensors manage the special function that modulates the ON/OFF frequency of the buzzer; the function will start from a shorter distance than when in reverse.

N.B.: the anti-collision sensors' operating principle is based on the emission and reception of high frequency ultrasound waves. The return wave allows the sensor to detect the presence of an object and to measure its distance from the machine.

N.B.: if the "Brake" function in the "Anti-collision" parameter is active, by moving the reverse lever, the function will start to slow the machine down automatically once a certain distance (set in the parameters) is reached.

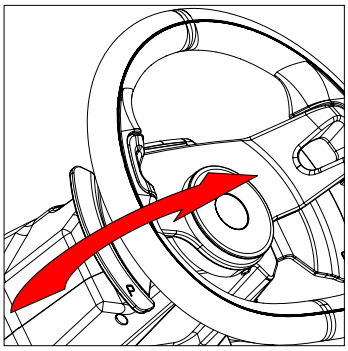

N.B.: if the "Brake" function in the "Anti-collision" parameter is active, moving the "EXTRA-PRESSURE ACTIVATION/DEACTIVATION" lever (1) under the steering wheel (**Fig.1**) for more than three seconds will temporarily deactivate the "Brake" function; however, the function will be active and when approaching an obstacle, the machine will emit a sound.

N.B.: to change the parameters relating to the anti-collision function, refer to "MENÙ ANTICOLLISION (GENERAL CONFIG)" on page 30 of the "OPERATOR INTERFACE CONFIGURATION MANUAL" delivered with the machine documentation.

SIDE BRUSH (DISCOID SCRUBBING VERSION)



The machine can be equipped with a side brush head upon request.
The side brush head is an essential tool when the areas to be cleaned feature shelves or other similar furniture.
The side brush moves 20 cm sideways, thus cleaning along walls and under shelves. In this way the entire room is cleaned in a single passage, and nothing is left behind.
If you need to use the side brush while working in scrubbing machine mode, press the SIDE BRUSH CONTROL switch (1). The switch is on the control panel (**Fig.1**).

N.B.: when the side brush head base is in its working position, the LED in the switch (1) will turn on.

N.B.: when the switch (1) is pressed, the side brush head will start to move towards the outside of the machine.

N.B.: the gearmotor in the side brush head will start to work at the same time as the gearmotors in the brush head.

N.B.: the solenoid valve in the side brush head will start to dispense detergent solution together with the solenoid valve in the brush head.

N.B.: if you want to bring the side brush head back to its resting position, press the switch (1). When the side brush head is in its resting position, the LED in the switch (1) will turn off.

N.B.: if the drive pedal (2) is released when working (**Fig.2**), after a few seconds the side brush head is automatically positioned in the rest position.

N.B.: If the brush head is raised when the side brush head is in the working position, the side brush head will also be moved into the resting position.

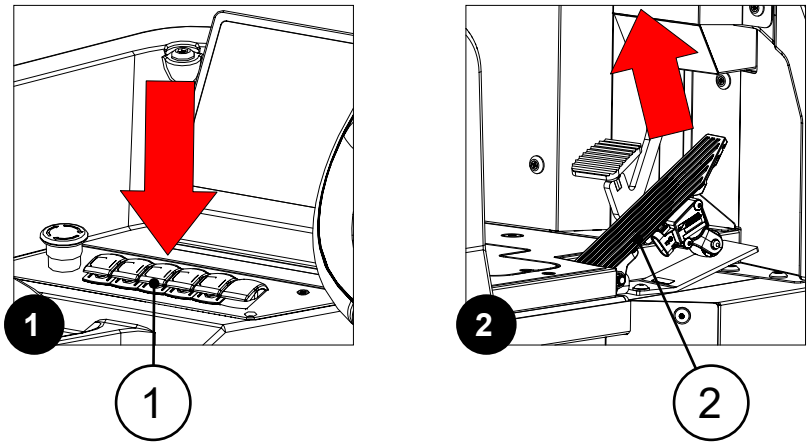

N.B.: to disable the use of the side brush, refer to “MENÙ LATERAL BRUSH (GENERAL CONFIG)” on page 30 of the "OPERATOR INTERFACE CONFIGURATION MANUAL" delivered with the machine documentation.

SIDE BRUSH (CYLINDRICAL SCRUBBING VERSION)



The machine can be equipped with two side brushes upon request.
The side brushes are an essential tool when the areas to be cleaned feature shelves or other similar furniture.
The side brushes are able to extend beyond the total width of the machine, thus being able to clean flush with the wall and pass under shelves. In this way the entire room is cleaned in a single passage, and nothing is left behind.
If you need to use the side brushes while working in scrubbing machine mode, press the SIDE BRUSHES CONTROL switch (1). The switch is on the control panel (**Fig.1**).

N.B.: when the side brushes are in its working position, the LED in the switch (1) will turn on.

N.B.: by pressing the switch (1) the side brush holders will begin to move towards the floor.

N.B.: the gearmotor in the side brush holder will start to work at the same time as the gearmotors in the brush head.

N.B.: if you want to bring the side brushes back to their rest position, press the switch (1). When the side brushes are in its resting position, the LED in the switch (1) will turn off.

N.B.: if the drive pedal (2) is released when working (**Fig.2**), after a few seconds the side brush holders will be automatically positioned in the rest position.

N.B.: if the central brush head is raised with the side brush holders in the working position, the side brush holders will also move to the rest position.

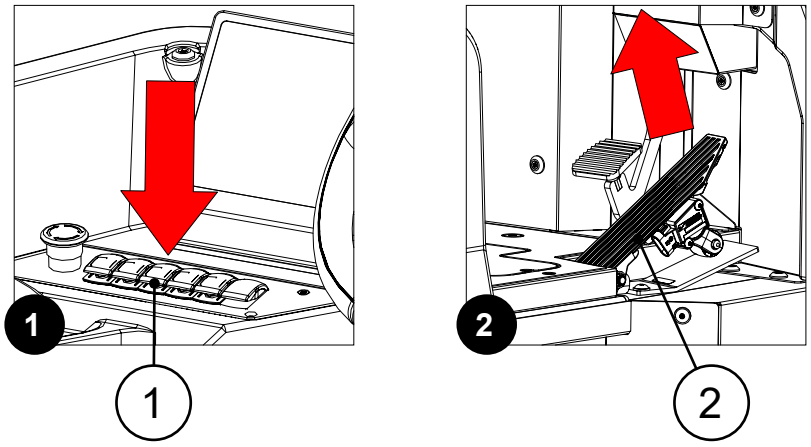

N.B.: to disable the use of the side brush, refer to “MENÙ LATERAL BRUSH (GENERAL CONFIG)” on page 30 of the "OPERATOR INTERFACE CONFIGURATION MANUAL" delivered with the machine documentation.

CONTINUOUS RECYCLING SYSTEM

Upon request, the machine can be equipped with a continuous detergent solution recycling system.

N.B.: The continuous detergent solution recycling system is a system that filters and cleans the detergent solution collected from the squeegee, thus making it available again for use.

N.B.: the use of the continuous detergent solution recycling system results in decreased water and detergent use, thus increasing safety for the operator, who comes into contact with the chemical products less frequently, and reducing costs.

N.B.: reusing the water increases the working autonomy, allows for more ^{sq}.m. to be cleaned using the same amount of resources, for a reduction in detergent solution consumption per intervention of up to 66% (savings calculated on a triple recycling cycle), and increases productivity up to 70%, as the number of stops required for emptying and filling the tanks are considerably reduced.

N.B.: the continuous recycling system is ideal for areas that are cleaned frequently and don't get very dirty.

If the machine you are using is equipped with the detergent solution recycling system, once the machine has been turned on, press the RECYCLING SYSTEM CONTROL switch (1) on the control panel (**Fig.1**).

N.B.: when the recycling system is in function, the relative icon (2) will appear on the control display (**Fig.2**).

N.B.: if you want to turn the recycling system off, press the switch (1). When the system is deactivated, the icon will no longer be visible on the control display (2).

N.B.: at the end of each work cycle, perform all the procedures listed in paragraph "DAILY MAINTENANCE" on page 96.

N.B.: the continuous recycling system includes a solenoid valve for the solution tank (referred to herein as ELE-01) and a solenoid valve for the recovery tank (referred to herein as ELE-02).

N.B.: with the continuous recycling system, the solenoid valve present in the scrubbing brush head is powered together with solenoid valve ELE-01 or ELE-02, based on the cases indicated below.

N.B.: with the continuous recycling system off, or until the solution tank is empty, the machine's electrical system will power solenoid valve ELE-01.

N.B.: with the continuous recycling system enabled, or with the solution tank empty, the machine's electrical system will power solenoid valve ELE-02.

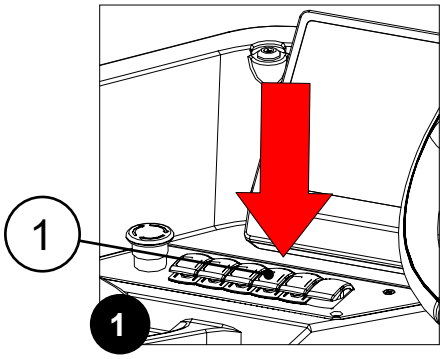

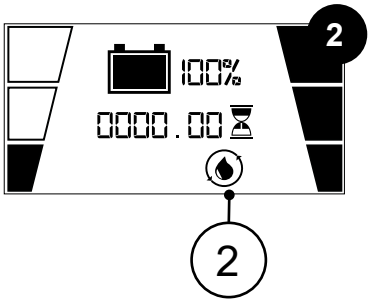

AUTOMATIC DETERGENT DOSING SYSTEM

Upon request, the machine can be equipped with an automatic detergent dosing system.

N.B.: with the automatic dosing system installed on the machine, the user can be sue that they're dispensing the right amount of solution based on the actual needs. For example, heavy duty cleaning requires more water and detergent than maintenance cleaning, for which the dirt typically is non very stubborn.

N.B.: One of the greatest strengths of the machine's built-in automatic dosing system is its ability to save water whenever possible, and to avoid using more detergent than necessary.

If the machine being used has an automatic dosing system, after turning on the machine press the AUTOMATIC DOSING SYSTEM CONTROL switch (1), on the control display (**Fig.1**).

N.B.: when the automatic dosing system is in function, the relative icon (2) is visible on the control display (**Fig.2**).

N.B.: if you want to turn the automatic dosing system off, press the switch (1). When the system is deactivated, the icon will no longer be visible on the control display (2).

N.B.: at the end of each work cycle, perform all the procedures listed in paragraph “DAILY MAINTENANCE” on page 105.

N.B.: when the automatic dosing system is in function, the chemical dosing pump is powered together with the water pump.

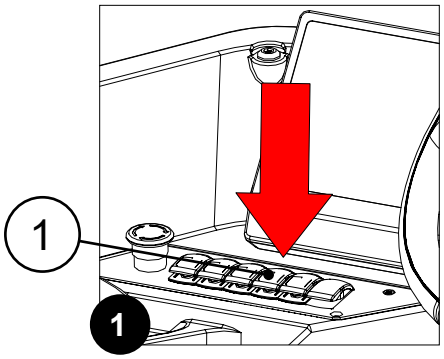

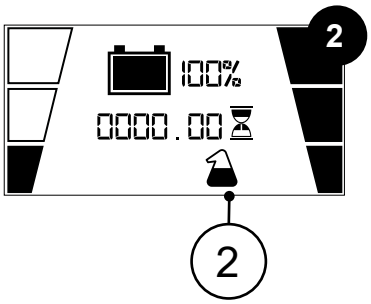

RECOVERY TANK SPRAY CLEANING GUN



Upon request, the machine can be equipped with a recovery tank spray cleaning gun kit. The recovery tank spray cleaning gun kit allows the user to utilise the water in the solution tank to clean the recovery tank, thus saving time and ensuring greater environmental sustainability.
To use the kit, do the following:

1. Take the machine to the maintenance area.

WARNING: the place designated for this operation must comply with current regulations concerning safety at work and current environmental protection regulations.

2. Stop the machine.
3. Activate the “MAINTENANCE POSITION” function - see “MAINTENANCE POSITION FUNCTION” on page 85.
4. Activate the recovery tank cleaning spray gun kit switch (1) located on the control panel (**Fig.1**).

N.B.: when the kit is functioning, the dedicated screen appears on the control display (**Fig.2**) and the LED in the switch (1) is on (**Fig.1**).

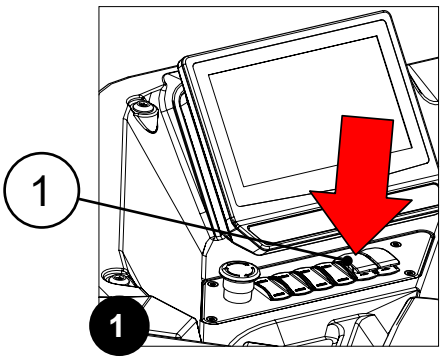

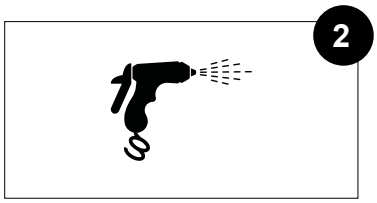

N.B.: if you want to turn the kit off, press the switch (1). When the system is deactivated, the LED in the switch (1) will be off.

N.B.: when the kit is deactivated the screen (**Fig. 2**) will no longer be visible on the control display.

N.B.: the kit is only in function when the machine is stopped and the solution tank is not empty.

N.B.: with the kit active, the traction and work functions are deactivated.

CAUTION: it is recommended to wear the appropriate PPE (Personal Protective Equipment), suitable for the work to be carried out.

5. Get off the machine.
6. Open the lateral door (2) (**Fig.3**)
7. Remove the recovery tank spray cleaning gun (3) (**Fig.4**).
8. To clean the recovery tank, perform the procedure described in the “DRAINING THE RECOVERY TANK” on page 116.
9. Activate the solution jet by pressing the lever in the tank cleaning accessory. Make sure the jet is pointing into the tank before pressing the lever.

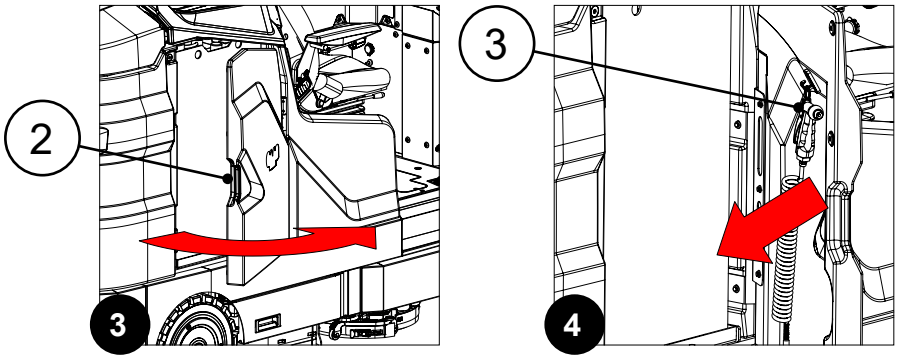

N.B.: To adjust the solution jet from the tank cleaning accessory, turn the knob (4) on the accessory itself (**Fig.5**).

N.B.: To adjust the intensity of the solution jet from the tank cleaning accessory, turn the knob (5) on the accessory itself (**Fig.6**).

N.B.: To stop the solution jet, use the lever (6) on the tank cleaning accessory (**Fig.7**).

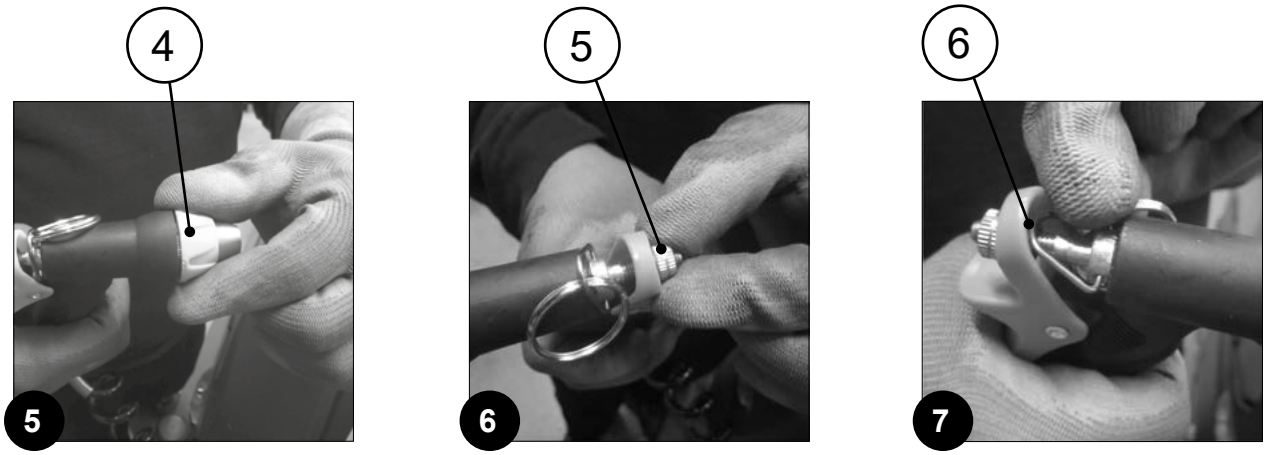

LIQUID VACUUM WAND



Upon request, the machine can be equipped with a liquid vacuum wand kit, which can be used to dry areas that are difficult to reach with the machine itself.

N.B.: the rubber blade on the tip of the nozzle perfectly dries the surface to which is applied thanks to the machine's highly efficient vacuum system.

To use the kit, do the following:

1. Take the machine to the maintenance area.

WARNING: the place designated for this operation must comply with current regulations concerning safety at work and current environmental protection regulations.

2. Stop the machine.
3. Activate the SERVICE function, see "MAINTENANCE POSITION FUNCTION" on page 85.
4. Activate the liquid vacuum wand kit by pressing the switch (1) on the control panel (**Fig.1**).

CAUTION: it is recommended to wear the appropriate PPE (Personal Protective Equipment), suitable for the work to be carried out.

5. Get off the machine.
6. Remove all the kit components from the storage compartment in the battery box lid (Fig.).
7. Assemble the steel extension tube (**Fig.2**).
8. Insert the vacuum brush into the extension tube (**Fig.3**).

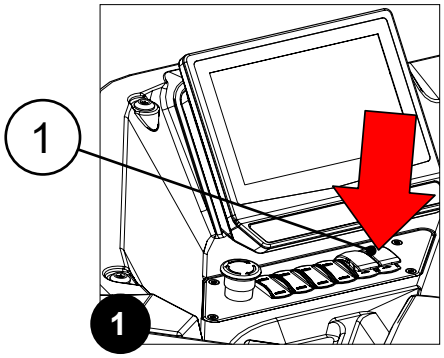





9. Connect the vacuum tube to the extension tube (**Fig.4**).
10. Remove the squeegee vacuum tube (2) from the sleeve (3) in the squeegee (**Fig.5**).
11. Connect the suction hose contained in the vacuum wand kit to the squeegee vacuum pipe.

N.B.: when the kit is functioning, the dedicated screen appears on the control display (**Fig.6**) and the LED in the switch (1) is on (**Fig.1**).



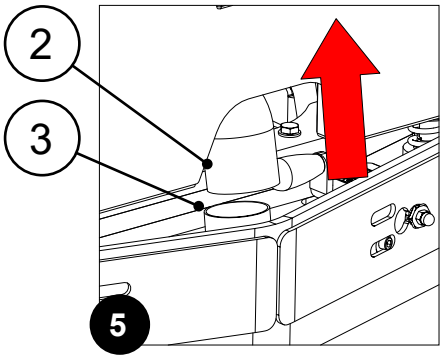

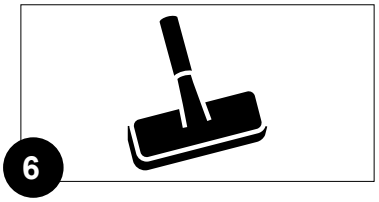

N.B.: if you want to turn the kit off, press the switch (1). When the system is deactivated, the LED in the switch (1) will be off.

N.B.: when the function is deactivated the screen (**Fig. 6**) will no longer be visible on the control display.

N.B.: the kit is only in function when the machine is stopped and the recovery tank is not full.

N.B.: when the vacuum kit is in function, the suction motor is powered at maximum.

N.B.: with the kit active, the traction and work functions are deactivated.

WARNING: Never collect solid substances, such as dust, cigarette butts, paper, etc.

WARNING: Never collect gases, explosive/inflammable liquids or powders, nor acids and solvents! These include gasoline, paint thinners and fuel oil (which, when mixed with the vacuum air, can form explosive vapours or mixtures), and also non-diluted acids and solvents, acetones, aluminium and magnesium powders. These substances may also corrode the materials used to construct the machine.

WARNING: if the machine is used in dangerous areas (e.g. petrol stations), the relative safety standards must be observed. It is forbidden to use the machine in environments with a potentially explosive atmosphere.

12. Carry out the vacuuming operations.
13. When the work is finished, remove the kit and place it in the storage compartment.

AT THE END OF THE WORK

At the end of the work, and before carrying out any type of maintenance, perform the following operations:

1. Set the machine to TRANSFER mode, see paragraph “WORKING MODE” on page 66.
2. Take the appliance to the dedicated dirty water drainage area.

WARNING: the place designated for this operation must comply with current regulations concerning safety at work and current environmental protection regulations.

CAUTION: it is recommended to wear the appropriate PPE (Personal Protective Equipment), suitable for the work to be carried out.

3. Make sure the machine is in a safe condition, see “MACHINE SAFETY” on page 35).
4. Perform all the daily maintenance procedures on the machine, see “DAILY MAINTENANCE” on page 105.
5. Once the daily maintenance operations are complete, take the machine to the designated storage location.

ATTENTION: Park the machine in an enclosed place, on a flat surface; near the machine there must be no objects that could either damage it, or be damaged through contact with it.

6. Secure the machine, see “MACHINE SAFETY” on page 35.

MAINTENANCE PLAN



The importance of machine maintenance should not be underestimated.
By ensuring the machine is inspected regularly, we can replace all parts that become worn in a timely manner.
In addition, we can also recognise faults quickly, thus increasing the useful life of our machine.

N.B.: Through its network of certified service centres, FIMAP proposes a range of special offers on maintenance services, such as those available in automotive workshops, see https://www.fimap.com/it/fimap/22/manutenzione-e-riparazione.html.

First, it is important to understand the difference between the various types of maintenance:

- routine maintenance is an activity designed to keep the machine in good working order.
- extraordinary maintenance regards work carried out to implement substantial updates on the machine.

N.B.: the primary purpose of routine maintenance is to maintain the performance of the machine's various functions, checking for any worn or faulty elements. A fault that is not fixed or an excessively worn part could cause damage to the machine or injure persons in the vicinity.

N.B.: The main purpose of extraordinary maintenance is to replace any worn or defective elements.

N.B.: In addition, maintenance enables the operator to use the machine in a safer manner, in the knowledge that the risk of unforeseen events has been reduced as far as possible.

N.B.: The use and maintenance manual contains all the procedures to be carried out during routine maintenance of the machine. By following these instructions, even individuals with no particular expertise in this area can check the machine and replace any parts necessary, taking a DIY approach. However, it is essential to remember the importance of entrusting the work to genuine professionals. An experienced specialist may notice details that could escape the notice of a less observant and expert eye.

N.B.: A dilemma may arise during maintenance: which spare parts are best?
FIMAP supplies original spare parts which are exactly identical to the parts on a given machine that need replacing; these are the best choice because they are durable and long-lasting, and help to maintain the performance of the machine.

N.B.: FIMAP service centres use these spare parts; in an unauthorised workshop, however, we recommend explicitly asking the technicians to use only these genuine FIMAP products. Using official spare parts extends the longevity of your machine.

DAILY MAINTENANCE

MACHINE COMPONENTS	PROCEDURE
Vacuum group	At the end of every work day, clean the squeegee, see “CLEANING THE SQUEEGEE” on page 111.
	At the end of every work day, clean the squeegee vacuum tube, see “CLEANING THE SQUEEGEE VACUUM HOSE” on page 112.
	Clean the collection filter tray in the recovery tank at the end of each work day. See “CLEANING THE COLLECTION FILTER TRAY” on page 114.
	Clean the wave protection tray in the recovery tank at the end of each work day. See “CLEANING THE WAVE PROTECTION TRAY” on page 115.
	At the end of every work day, clean the side brush head squeegee, see “CLEANING OF SIDE BRUSH HEAD SQUEEGEE (DISCOID SCRUBBING VERSION)” on page 125.
	At the end of every work day, clean the debris hopper vacuum filter, see “CLEANING THE DEBRIS HOPPER VACUUM FILTER (COMBINED VERSION)” on page 131.
Scrubbing system; sweeping	Clean the brushes in the brush head at the end of each work day, see “CLEANING OF BRUSH HEAD DRIVE BRUSH - DISC (DISCOID SCRUBBING VERSIONS)” on page 121.
	Clean the rubber blades of the brush head splash guard at the end of each work day, see “CLEANING OF BRUSH HEAD SIDE SPLASH GUARD (DISCOID SCRUBBING VERSION)” on page 123.
	Clean the brushes in the brush head at the end of each work day, see “CLEANING OF BRUSH HEAD BRUSH (CYLINDRICAL SCRUBBING VERSIONS)” on page 126.
	Clean the rubber blades of the brush head splash guard at the end of each work day, see “CLEANING OF BRUSH HEAD SIDE SPLASH GUARD (CYLINDRICAL SCRUBBING VERSION)” on page 127.
	Clean the brushes in the sweeping brush head at the end of each work day, see “CLEANING THE BRUSH HEAD BRUSHES (COMBINED VERSION)” on page 130.
	Clean the brush in the brush head at the end of each work day, see “CLEANING OF SIDE BRUSH HEAD DRIVE BRUSH - DISC (DISCOID SCRUBBING VERSION)” on page 123.
	Clean the rubber blade of the side brush head splash guard at the end of each work day, see “CLEANING OF SIDE BRUSH HEAD SPLASH GUARD (DISCOID SCRUBBING VERSION)” on page 124.
	Clean the side sweeping brushes at the end of each work day, see “CLEANING THE SIDE BRUSH (CYLINDRICAL - COMBINED SCRUBBING VERSION)” on page 129.
	Empty the debris hopper in the brush head at the end of each working day, see “EMPTYING THE DEBRIS HOPPER (CYLINDRICAL VERSION)” on page 80.
	Empty the debris hopper in the front sweeping brush head at the end of each work day, see “EMPTYING THE DEBRIS HOPPER (COMBINED VERSION)” on page 81.
Recovery tank	At the end of each work day, empty the recovery tank, see “EMPTYING THE RECOVERY TANK” on page 106; after emptying the tank, clean the inside
	At the end of each work day, after emptying and cleaning the recovery tank, clean the detergent solution recycling system filters. See the “CLEANING THE FILTER ON THE DETERGENT SOLUTION RECYCLING SYSTEM (FLR VERSION)” on page 120.
Solution tank	At the end of every work day, empty the solution tank, see “EMPTYING THE SOLUTION TANK” on page 118; after emptying the tank, clean the inside
Battery-powered supply system	For the maintenance of the batteries utilised, follow the instructions contained in the document provided by the battery manufacturer.

WEEKLY MAINTENANCE

MACHINE COMPONENTS	PROCEDURE
Machine water system	Every week, clean the filter of the machine water system, see “CLEANING THE WATER SYSTEM FILTER” on page 118.
	Check the integrity of the machine's water system filter each week. If it needs to be replaced, contact your FIMAP service centre of reference or the one closest to you.
Automatic chemical detergent management system	Clean the automatic chemical detergent management system filter every week, see “CLEANING THE FILTER ON THE AUTOMATIC CHEMICAL DETERGENT MANAGEMENT SYSTEM (FSS VERSION)” on page 119.
	Check the condition of the automatic chemical detergent management system filter each week. If it needs to be replaced, contact your FIMAP service centre of reference or the one closest to you.
Vacuum group	Check the integrity of the rubber blades on the squeegee every week, if replacement is necessary see “REPLACING THE SQUEEGEE RUBBER BLADES” on page 136.
	Check the condition of the squeegee vacuum tube every week. If it needs to be replaced, contact your FIMAP service centre of reference or the one closest to you.
	Check the condition of the recovery tank wave protection tray every week. If it needs to be replaced, contact your FIMAP service centre of reference or the one closest to you.
	Check the condition of the recovery tank collection filter each week. If it needs to be replaced, contact your FIMAP service centre of reference or the one closest to you.
	Check the integrity of the rubber blades on the side brush head brush squeegee every week; if replacement is necessary see “REPLACEMENT OF SIDE BRUSH HEAD SQUEEGEE RUBBER BLADES (DISCOID SCRUBBING VERSION)” on page 141.
	Check the condition of the squeegee vacuum tube on the side brush head brush every week. If it needs to be replaced, contact your FIMAP service centre of reference or the one closest to you.
	Check the condition of the debris hopper vacuum filter every week. If it needs to be replaced, contact your FIMAP service centre of reference or the one closest to you.
Scrubbing system; sweeping	Check the integrity of the brushes on the brush head body every week. If they need to be replaced, see “REPLACEMENT OF BRUSH HEAD DRIVE BRUSHES OR DISCS (DISCOID SCRUBBING VERSION)” on page 138.
	Check the integrity of the rubber blades of the brush head splash guard every week. If they need to be replaced, see “REPLACEMENT OF BRUSH HEAD SIDE SPLASH GUARD (DISCOID SCRUBBING VERSION)” on page 139.
	Check the integrity of the brush in the side brush head every week. If it needs to be replaced, see the “REPLACEMENT OF SIDE BRUSH HEAD DRIVE BRUSH OR DISCS (DISCOID SCRUBBING VERSION)” on page 140.
	Check the integrity of the rubber blade of the brush head splash guard every week. If it needs to be replaced, see “REPLACEMENT OF SIDE BRUSH HEAD SPLASH-GUARD RUBBER BLADE (DISCOID SCRUBBING VERSION)” on page 141.
	Check the integrity of the brushes on the brush head body every week. If they need to be replaced, see “REPLACING THE BRUSH HEAD BRUSHES (CYLINDRICAL SCRUBBING VERSION)” on page 143.
	Check the integrity of the rubber blades of the brush head splash guard every week. If they need to be replaced, see “REPLACEMENT OF BRUSH HEAD SIDE SPLASH GUARD (CYLINDRICAL SCRUBBING VERSION)” on page 143<?>.
	Check the integrity of the brush in the side brush head every week. If it needs to be replaced, see “REPLACEMENT OF THE SIDE BRUSH (CYLINDRICAL-COMBINED SCRUBBING VERSION)” on page 145.
	Check the integrity of the brushes on the brush head body every week. If they need to be replaced, see “REPLACING THE SWEEPING BRUSH HEAD BRUSHES (COMBINED VERSION)” on page 146.
Recovery tank	Check the condition of the recovery tank drain pipe every week. If it needs to be replaced, contact your FIMAP service centre of reference or the one closest to you.
	Each week, after having drained and cleaned the recovery tank, check the condition of the detergent solution recycling system filters. If they need to be replaced, contact your FIMAP service centre of reference or the one closest to you.

MACHINE COMPONENTS	PROCEDURE
Solution tank	Check the condition of the solution tank drain pipe every week. If it needs to be replaced, contact your FIMAP service centre of reference or the one closest to you.
	Each week, after having drained and cleaned the recovery tank, check the integrity of the machine's water system filter. If it needs to be replaced, contact your FIMAP service centre of reference or the one closest to you.
Battery-powered supply system	For the maintenance of the batteries utilised, follow the instructions contained in the document provided by the battery manufacturer.

MONTHLY MAINTENANCE

MACHINE COMPONENTS	PROCEDURE
Vacuum group	Check the correct levelling of the rubber blades in the squeegee every month, if they need to be adjusted see “ADJUSTING THE SQUEEGEE RUBBER BLADES” on page 148.
	Check the wear of the rubber dust guards in the debris hopper every month. If necessary to replace, contact your FIMAP service centre of reference or the one closest to you.
Scrubbing system; sweeping	Check the correct levelling of the rubber blades in the scrubbing brush head every month, if they need to be adjusted see “ADJUSTMENT OF BRUSH HEAD SIDE SPLASH GUARD (DISCOID SCRUBBING VERSION)” on page 151.
	Check the correct levelling of the rubber blades in the scrubbing brush head every month, if they need to be adjusted see “ADJUSTMENT OF BRUSH HEAD SIDE SPLASH GUARD (CYLINDRICAL SCRUBBING VERSION)” on page 152.
	Check the wear of the rubber dust guards in the sweeping brush head every month. If necessary to replace, contact your FIMAP service centre of reference or the one closest to you.
Battery-powered supply system	For the maintenance of the batteries utilised, follow the instructions contained in the document provided by the battery manufacturer.

MAINTENANCE PRIOR TO EXTENDED PERIODS OF DOWNTIME

MACHINE COMPONENTS	PROCEDURE
Vacuum group	Clean the squeegee before extended periods of machine downtime, see “CLEANING THE SQUEEGEE” on page 111.
	Clean the side brush head squeegee before extended periods of machine downtime, see “CLEANING OF SIDE BRUSH HEAD SQUEEGEE (DISCOID SCRUBBING VERSION)” on page 125.
	Clean the squeegee vacuum tube before extended periods of machine downtime, see “CLEANING THE SQUEEGEE VACUUM HOSE” on page 112.
	Clean the wave protection tray in the recovery tank before extended periods of machine downtime, see “CLEANING THE WAVE PROTECTION TRAY” on page 115.
	Clean the collection filter in the recovery tank before extended periods of machine downtime, see “CLEANING THE COLLECTION FILTER TRAY” on page 114.
	Clean the suction filter in the debris hopper before extended periods of machine downtime, see “CLEANING THE DEBRIS HOPPER VACUUM FILTER (COMBINED VERSION)” on page 131.
Scrubbing system; sweeping	Clean the brushes in the brush head before extended periods of machine downtime, see “CLEANING OF BRUSH HEAD DRIVE BRUSH - DISC (DISCOID SCRUBBING VERSIONS)” on page 121.
	Clean the rubber blades of the brush head splash guard before extended periods of machine downtime, see “CLEANING OF BRUSH HEAD SIDE SPLASH GUARD (DISCOID SCRUBBING VERSION)” on page 123.
	Clean the brush in the side brush head before extended periods of machine downtime, see “CLEANING OF SIDE BRUSH HEAD DRIVE BRUSH - DISC (DISCOID SCRUBBING VERSION)” on page 123.
	Clean the rubber blade of the side brush head splash guard before extended periods of machine downtime, see “CLEANING OF SIDE BRUSH HEAD SPLASH GUARD (DISCOID SCRUBBING VERSION)” on page 124.
	Clean the brushes in the brush head before extended periods of machine downtime, see “CLEANING OF BRUSH HEAD BRUSH (CYLINDRICAL SCRUBBING VERSIONS)” on page 126.
	Clean the rubber blades of the brush head splash guard before extended periods of machine downtime, see “CLEANING OF BRUSH HEAD SIDE SPLASH GUARD (CYLINDRICAL SCRUBBING VERSION)” on page 127.
	Clean the brush in the side brush head before extended periods of machine downtime, see “CLEANING THE SIDE BRUSH (CYLINDRICAL - COMBINED SCRUBBING VERSION)” on page 129.
	Clean the debris hopper present in the brush head before extended periods of machine downtime, see “CLEANING THE DEBRIS HOPPER (CYLINDRICAL SCRUBBING VERSION)” on page 128.
	Clean the brushes in the sweeping brush head before extended periods of machine downtime, see “CLEANING THE BRUSH HEAD BRUSHES (COMBINED VERSION)” on page 130.
	Clean the debris hopper in the sweeping group before extended periods of machine downtime, see “CLEANING THE DEBRIS HOPPER (COMBINED VERSION)” on page 132.
Recovery tank	Before extended periods of machine downtime, empty the recovery tank, see “DRAINING THE RECOVERY TANK” on page 116; after emptying the tank, clean the inside.
	Before extended periods of machine downtime, after having emptied and cleaned the recovery tank, clean the detergent solution recycling system filters, see “CLEANING THE FILTER ON THE DETERGENT SOLUTION RECYCLING SYSTEM (FLR VERSION)” on page 120.
Solution tank	Before extended periods of machine downtime, empty the solution tank, see “EMPTYING THE SOLUTION TANK” on page 118; after emptying the tank, clean the inside.
Machine water system	Clean the machine water system filter before extended periods of machine downtime, see “CLEANING THE WATER SYSTEM FILTER” on page 118.

MACHINE COMPONENTS	PROCEDURE
Automatic chemical detergent management system	Clean the automatic chemical detergent management system filter before extended periods of machine downtime, see “CLEANING THE FILTER ON THE AUTOMATIC CHEMICAL DETERGENT MANAGEMENT SYSTEM (FSS VERSION)” on page 119.
	Before extended periods of machine downtime, empty the detergent tank in the automatic chemical detergent management system, see “EMPTYING OF CHEMICAL DETERGENT TANK (FSS VERSION)” on page 119; after emptying the detergent tank, clean the inside.
Battery-powered supply system	For the maintenance of the batteries utilised, follow the instructions contained in the document provided by the battery manufacturer.

ROUTINE MAINTENANCE

Before carrying out any routine maintenance operations, proceed as follows:

1. Take the machine to the maintenance area.

N.B.: the place designated for this operation must comply with current regulations concerning safety at work and current environmental protection regulations.

2. Sit on the driver's seat.
3. Insert the key (1) into the slot (2) on the right side of the column (**Fig.1**).
4. Turn on the machine and turn the key (1) a quarter turn clockwise (**Fig.2**).
5. Press the button (3) present on the control panel (**Fig.3**) to activate the SERVICE function, see "MAINTENANCE POSITION FUNCTION" on page 85.

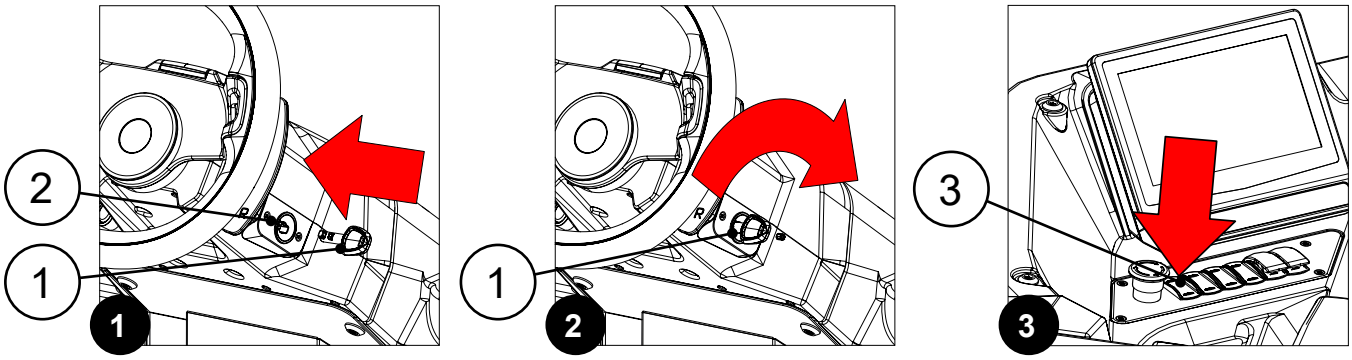

N.B.: once the maintenance sequence has been activated, it is not possible to activate other functions or move the machine.

CAUTION: make sure that no people or objects are in the machine's vicinity during this operation.

6. Bring the main switch to the "0" position by making a quarter turn anti-clockwise with the key (1) (**Fig.4**).
7. Remove the key from the instrument panel.
8. Get off the machine.
9. Remove the key from the instrument panel.
10. Get off the machine.

CAUTION: do not position your foot above the side brush head carter while the machine is descending.

11. Grasp the handle (4) and turn the battery compartment carter (5) to its maintenance position (**Fig.5**).

ATTENTION: to prevent the lid from turning, insert the retainer (6) into the slot (7) (**Fig.6**).

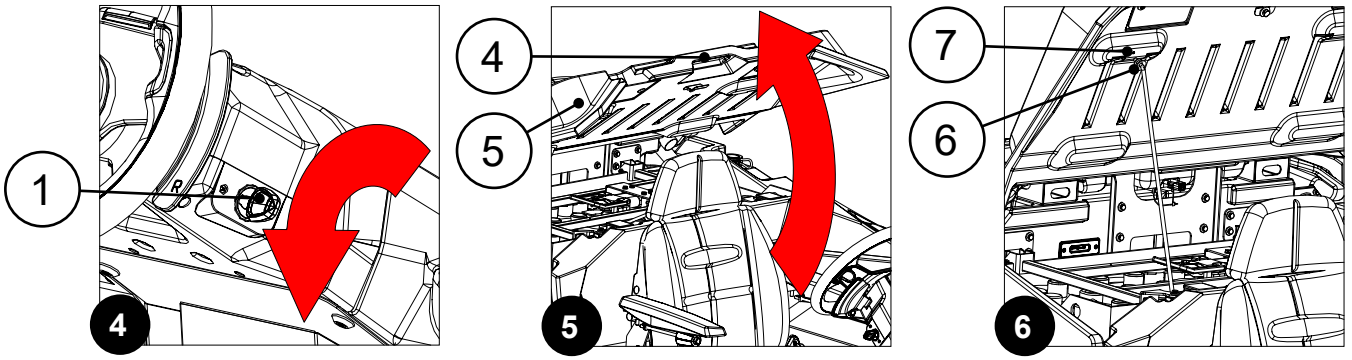

ATTENTION: the following operations must be carried out by qualified personnel. Incorrect operations could result in machine malfunctions.

12. Disconnect the machine's electrical system wiring connector (8) from the connector on the power cable coming from the battery box (**Fig. 7**).
13. Grasp the battery compartment lid and turn it to its working position.

N.B.: release the retainer before turning the lid.

14. Set the detergent solution flow to its OFF position by turning the lever (9) under the operator's seat clockwise (**Fig. 8**).

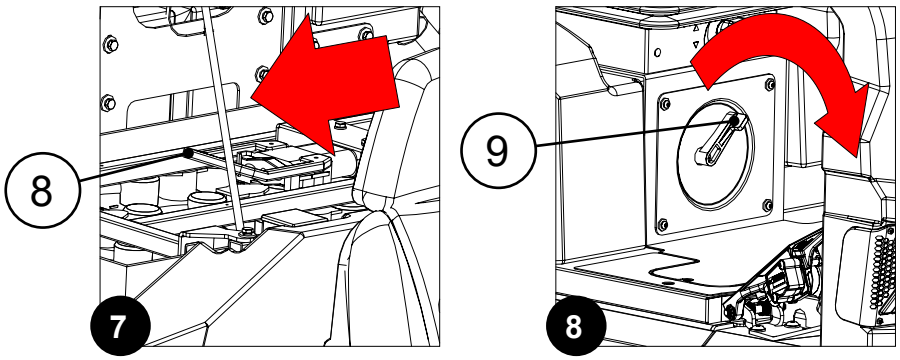

CAUTION: it is recommended to wear the appropriate PPE (Personal Protective Equipment), suitable for the work to be carried out.

CLEANING THE SQUEEGEE

The careful cleaning of the whole vacuum unit ensures better drying and cleaning of the floor as well as a longer vacuum motor life.

To clean the squeegee, proceed as follows:

1. Remove the squeegee vacuum hose (1) from the nozzle (2) in the squeegee (**Fig.1**).
2. Completely unscrew the knobs (3) in the squeegee pre-assembly (**Fig.2**).
3. Remove the squeegee from the slits in the squeegee connector (**Fig. 3**).

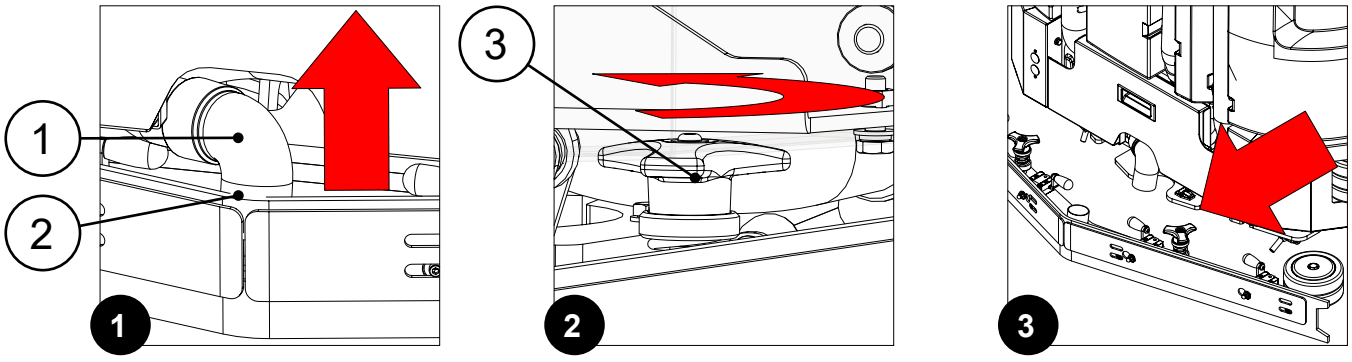

4. Use a jet of water and then a damp cloth to thoroughly clean the vacuum chamber (4) (**Fig.4**).

N.B.: the vacuum chamber is to be understood as the portion of the squeegee unit located between the front squeegee rubber blade and the rear squeegee rubber blade.

N.B.: if the dirt persists, use a brush with medium hardness bristles.

5. Use a jet of water and then a damp cloth to thoroughly clean the rear rubber blade (5) (**Fig.5**).
6. Use a jet of water and then a damp cloth to thoroughly clean the front rubber blade (6) (**Fig.5**).

N.B.: Check the integrity of the two rubber blades, and replace the squeegee rubber blades if necessary, see "REPLACING THE SQUEEGEE RUBBER BLADES" on page 136.

7. Use a jet of water and then a damp cloth to thoroughly clean the suction nozzle (2) (**Fig.5**).

N.B.: if the dirt persists, use a brush with medium hardness bristles.

8. Proceed in the opposite order to reassemble all the parts.

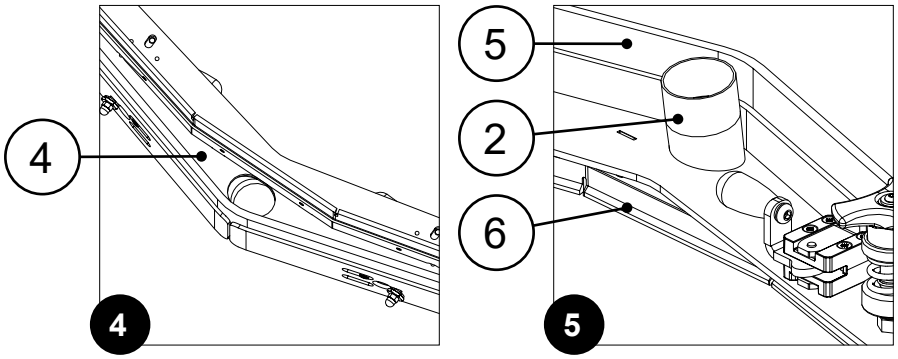

CLEANING THE SQUEEGEE VACUUM HOSE

The thorough cleaning of the squeegee vacuum hose guarantees better cleaning and drying of the floor, as well as a longer life for the suction motor.

To clean the squeegee vacuum hose, do the following:

1. Grasp the handle (1) and turn the battery compartment lid (2) to its maintenance position (**Fig.1**).

ATTENTION: to prevent the lid from turning, insert the retainer (3) into the slot (4) (**Fig.2**).

ATTENTION: the following operations must be carried out by qualified personnel. An incorrect connection of the connector may cause a malfunction of the device.

2. Connect the connector (5) in the battery box cable to the connector on the machine power cable (**Fig.3**).

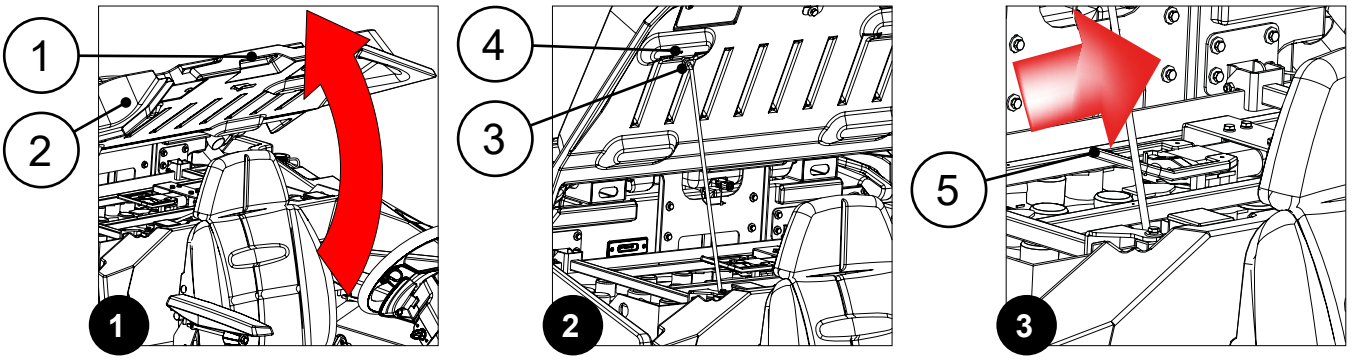

3. Grasp the battery compartment lid and turn it to its working position.

N.B.: release the retainer before turning the lid.

4. Sit on the driver's seat.
5. Insert the key (6) into the slot (7) on the right side of the column (**Fig.4**).
6. Turn on the machine and turn the key (6) a quarter turn clockwise (**Fig.5**).
7. The machine is now operating with the ECO MODE working program, TRANSFER working mode.
8. Set the machine to SCRUBBING mode, see "WORKING MODE" on page 66.
9. Activate the side brush, see "SIDE BRUSH (DISCOID SCRUBBING VERSION)" on page 95.
10. Press the drive pedal (8) (**Fig.6**) to begin moving the machine.

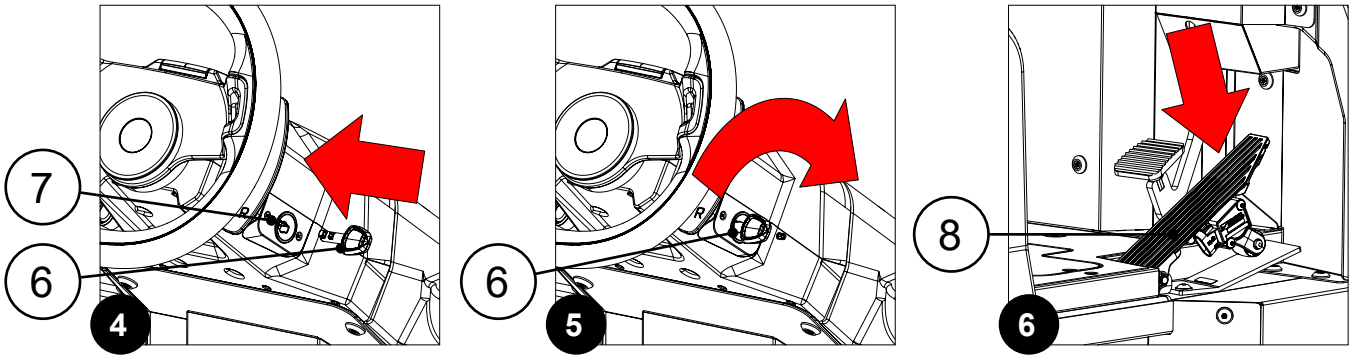

11. After about 30 seconds, turn off the machine and turn the key (6) a quarter turn anti-clockwise (**Fig.7**).
12. Remove the key from the slot on the right hand side of the steering column.
13. Position yourself to the side of the machine, grasp the handle (1) and turn the battery compartment lid (2) to its maintenance position (**Fig.1**).

ATTENTION: to prevent the lid from turning, insert the retainer (3) into the slot (4) (**Fig.2**).

ATTENTION: the following operations must be carried out by qualified personnel. An incorrect connection of the connector may cause a malfunction of the device.

14. Disconnect the connector (5) in the connector battery box cable on the machine power cable.
15. Grasp the battery compartment lid and turn it to its working position.

N.B.: release the retainer before turning the lid.

16. Open the right inspection carter (9) (**Fig.8**).
17. Turn the squeegee support (10) anti-clockwise (**Fig.9**).

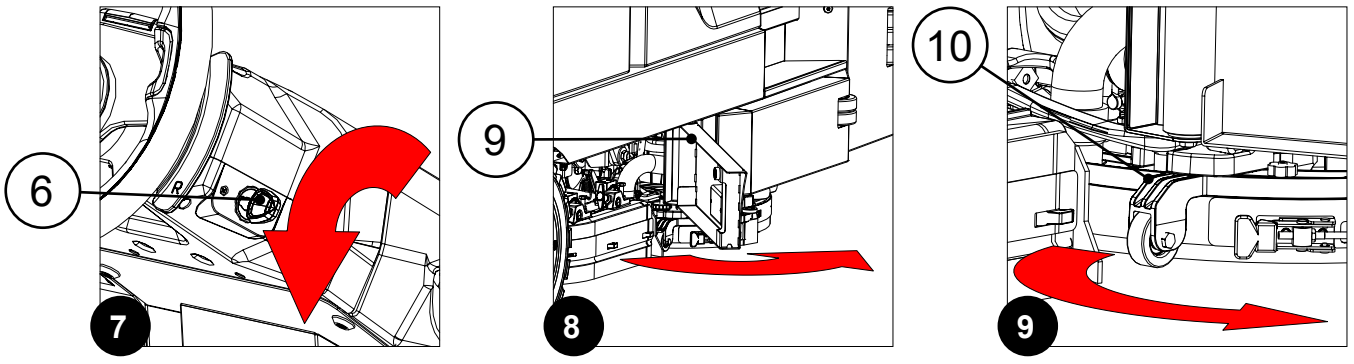

18. Remove the squeegee vacuum hose (11) from the nozzle (12) on the squeegee (**Fig.10**) and place it on the dirty water drain pan.
19. Stand at the back of the machine.
20. Remove the squeegee vacuum hose (13) from the nozzle (14) on the squeegee (**Fig.11**) and place it on the dirty water drain pan.

21. Position yourself at the rear of the machine, grasp the handle (15), and turn the recovery tank lid (16) to its maintenance position (**Fig.12**).

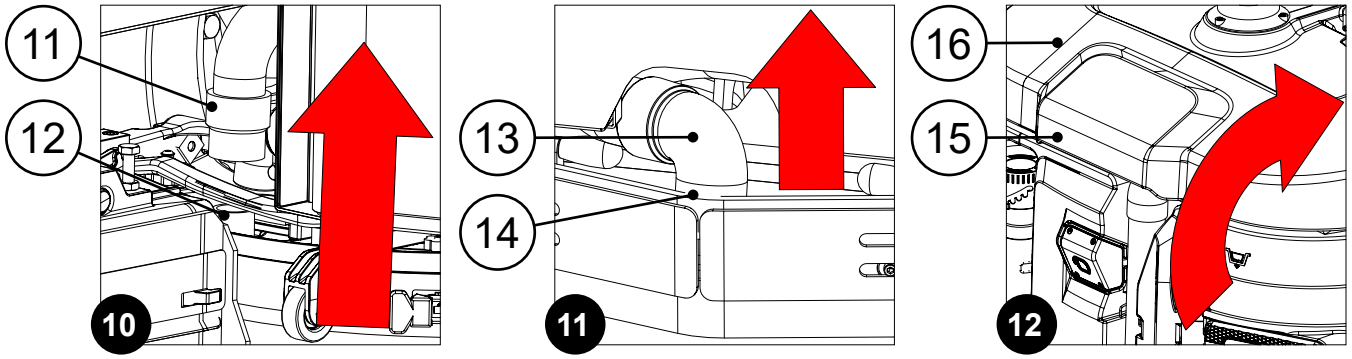

ATTENTION: to prevent the lid from turning, insert the retainer (17) into the slot (18) (**Fig.13**).

22. Remove the COLLECTION FILTER TRAY (19) (**Fig.14**).
23. Clean the inside of the vacuum hose (20) with a jet of running water (**Fig.15**).
24. Repeat the operations in reverse order to reassemble all the parts.

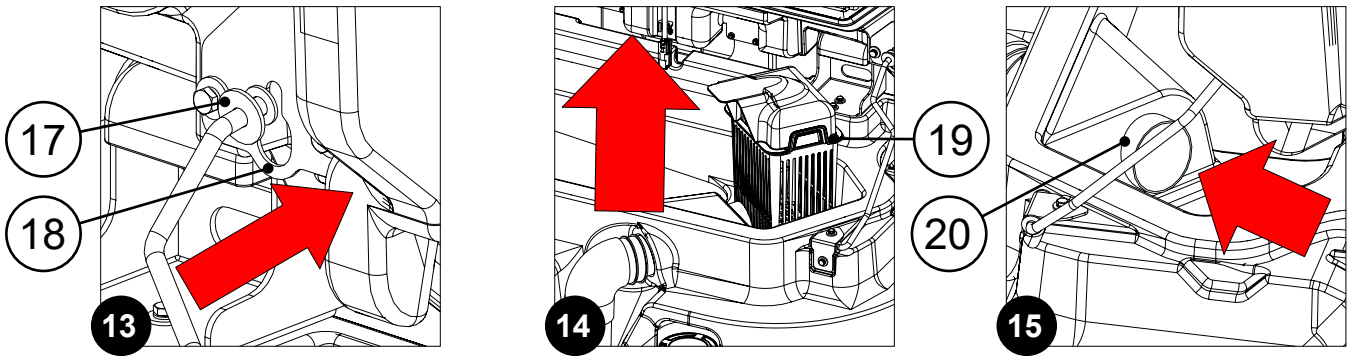

CLEANING THE COLLECTION FILTER TRAY

The thorough cleaning of the collection filter tray guarantees better drying and cleaning of the floor, as well as a longer life for the suction motor.

To clean the collection filter tray, do the following:

1. Grasp the handle (1) and turn the recovery tank's lid (2) to its maintenance position (**Fig.1**).

ATTENTION: to prevent the lid from turning, insert the retainer (3) into the slot (4) (**Fig.2**).

2. Remove the COLLECTION FILTER TRAY (5) (**Fig.3**).

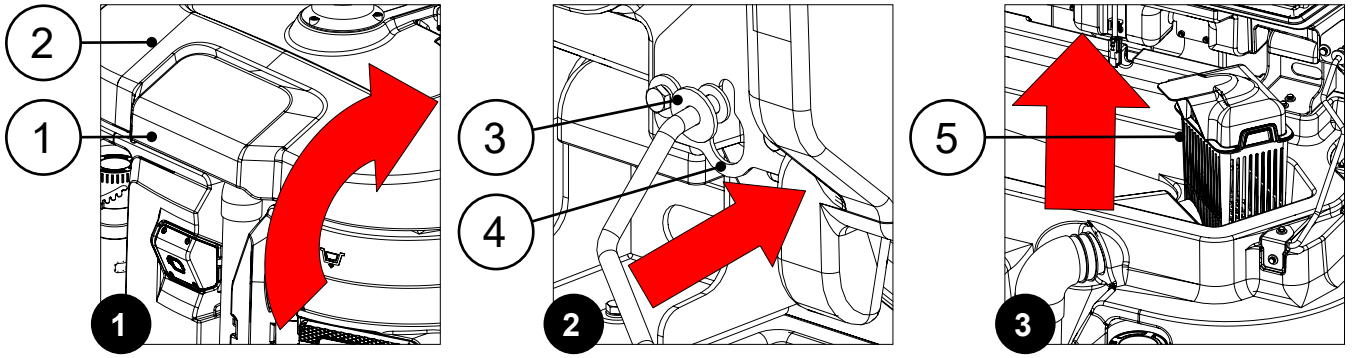

3. Remove the COLLECTION FILTER TRAY LID (6) (**Fig.4**).
4. Clean the collection filter tray and lid under a jet of running water.

N.B.: Use a spatula or a brush with medium hardness bristles to eliminate any dirt that is particularly difficult to remove.

5. Use a cloth to dry the collection filter tray and lid, and place them back inside the recovery tank.
6. Repeat the operations in reverse order to reassemble all the parts.

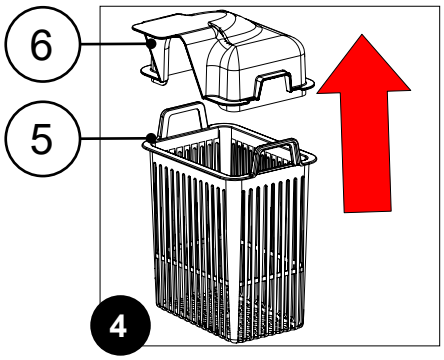

CLEANING THE WAVE PROTECTION TRAY

The thorough cleaning of the wave protection tray ensures better functionality and a longer working life for the suction motor.

To clean the wave protection tray, do the following:

1. Grasp the handle (1) and turn the recovery tank's lid (2) to its maintenance position (**Fig.1**).

ATTENTION: to prevent the lid from turning, insert the retainer (3) into the slot (4) (**Fig.2**).

2. Remove the wave protection tray SUPPORT (5), remembering to unscrew the knobs (6) before removing the support (**Fig.3**).

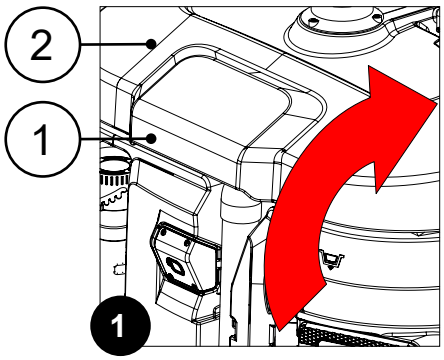

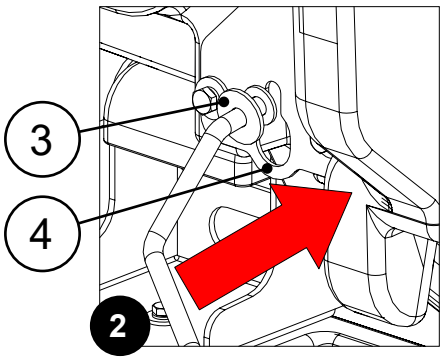

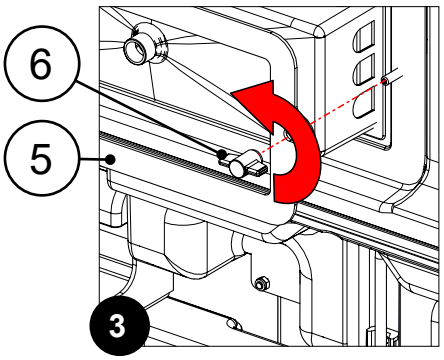

3. Remove the Wave protection tray (7) (**Fig.4**).
4. Clean the wave protection tray under a stream of running water.

N.B.: Use a spatula or a brush with medium hardness bristles to eliminate any dirt that is particularly difficult to remove.

5. Use a cloth to dry the wave protection tray, and place it back inside the recovery tank.
6. Repeat the operations in reverse order to reassemble all the parts.

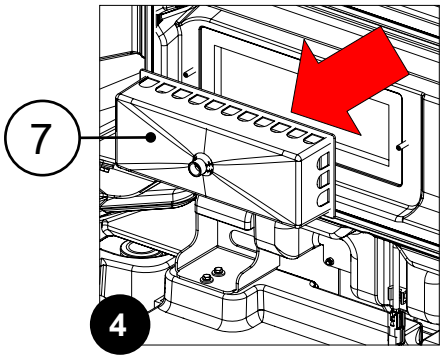

DRAINING THE RECOVERY TANK

Thoroughly cleaning the recovery tank will prevent unpleasant odours from forming inside. To clean the tank, do the following:

1. Remove the recovery tank drain hose (1) from the retainers (**Fig.1**).
2. Place the hose over the drain pan.

N.B.: discharges into the subsoil resulting from any work activities must only be carried out in designated areas; they must also be performed in compliance with the environmental regulations in force in the machine's country of use.

3. Gradually unscrew the cap (2) on the drainage hose (**Fig.2**).
4. Grasp the handle (3) and turn the recovery tank's lid (4) to its maintenance position (**Fig.3**).

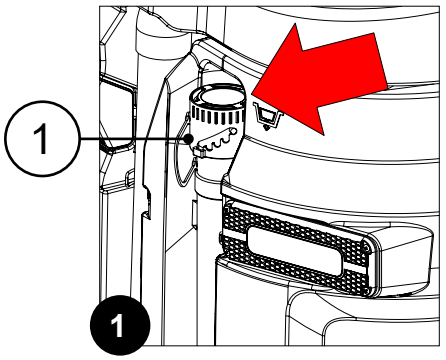

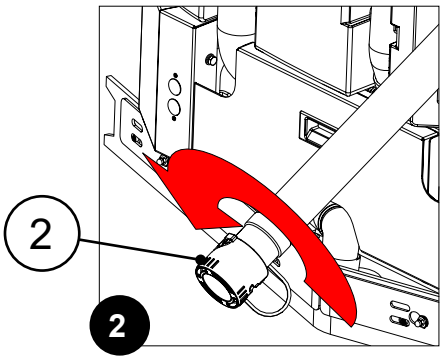

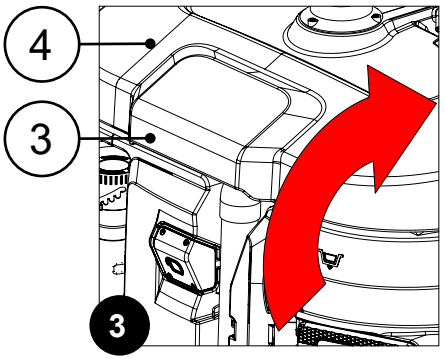

WARNING: to prevent the lid from turning, insert the retainer (5) into the slot (6) (**Fig.4**).

5. If necessary use the inspection footboard (7) at the back of the machine (**Fig.5**).

N.B.: to open the inspection footboard, grasp the handle (8), and rotate the footboard towards the outside of the machine (**Fig. 6**).

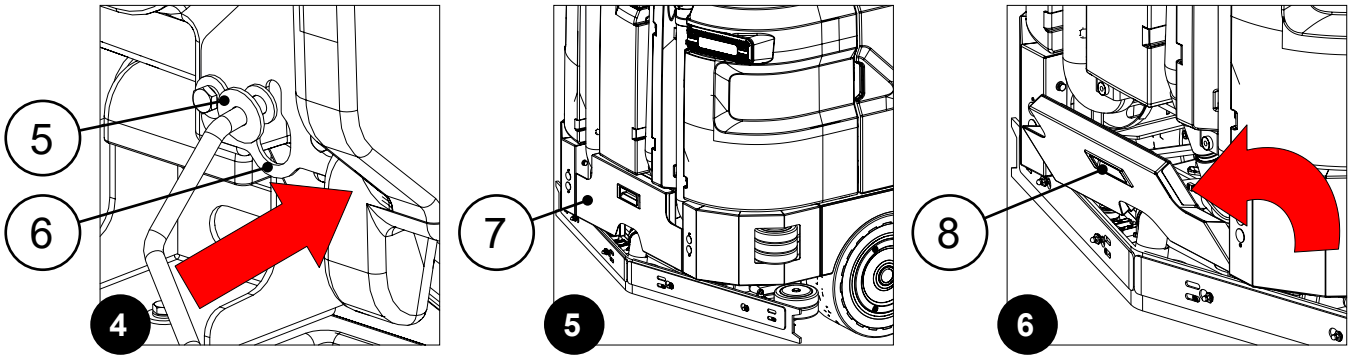

6. Rinse the inside of the recovery tank with a jet of running water.

N.B.: If necessary, use a spatula to remove any sludge that may have accumulated at the bottom of the tank.

N.B.: the inside of the tank can be cleaned with the optional recovery tank spray cleaning gun kit. If the machine is equipped with this kit, see “RECOVERY TANK SPRAY CLEANING GUN” on page 99.

7. Gently rinse the float switch (9) inside the recovery tank (**Fig.7**).
8. Clean the collection tray (10) (**Fig.8**), see “CLEANING THE COLLECTION FILTER TRAY” on page 114.
9. Clean the wave protection tray (11) (**Fig.9**), see “CLEANING THE WAVE PROTECTION TRAY” on page 115.

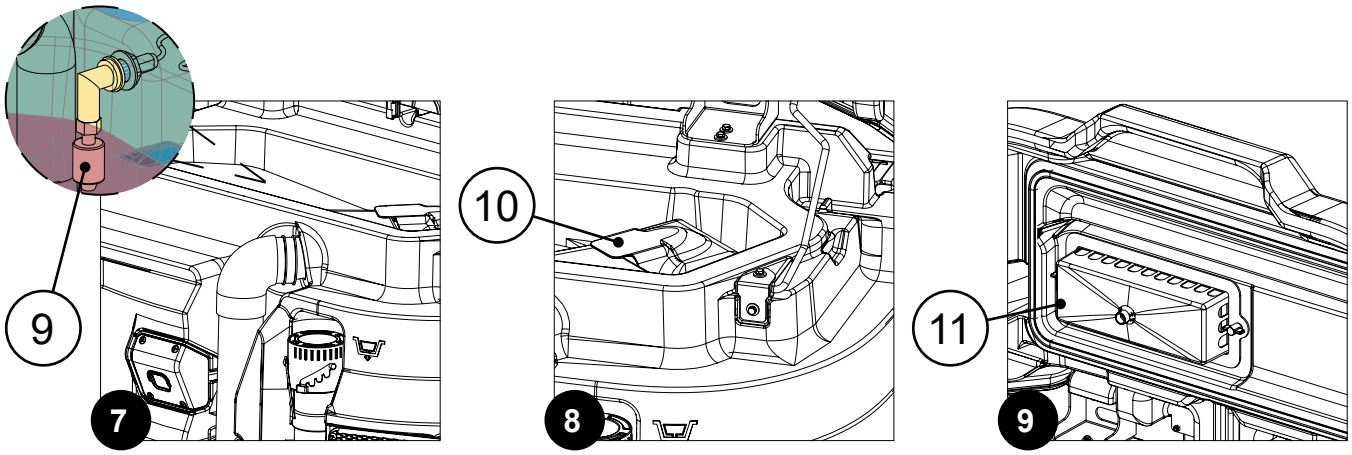

10. Repeat the operations in reverse order to reassemble all the parts.

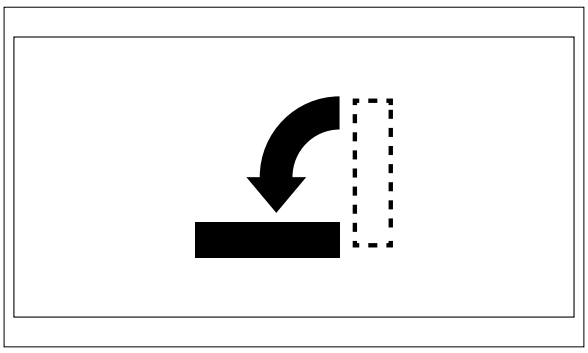

N.B.: if the inspection footboard (7) is left open, the alarm message shown to the side will appear on the control display once the machine has been turned on.

N.B.: with the inspection footboard open (7), the machine's functions will remain blocked until the footboard is closed.

CLEANING THE WATER SYSTEM FILTER

The thorough cleaning of the water system filter guarantees a more effective delivery to the brushes by the detergent solution delivery system, which in turn will ensure better floor cleaning, thus decreasing costs while at the same time improving environmental sustainability and performance. To clean the water system filter, do the following:

1. Open the inspection carter (1) (**Fig.1**).
2. Remove the cap from the filter body (2) (**Fig.2**).
3. Remove the filter cartridge from the filter body (3) (**Fig.3**).

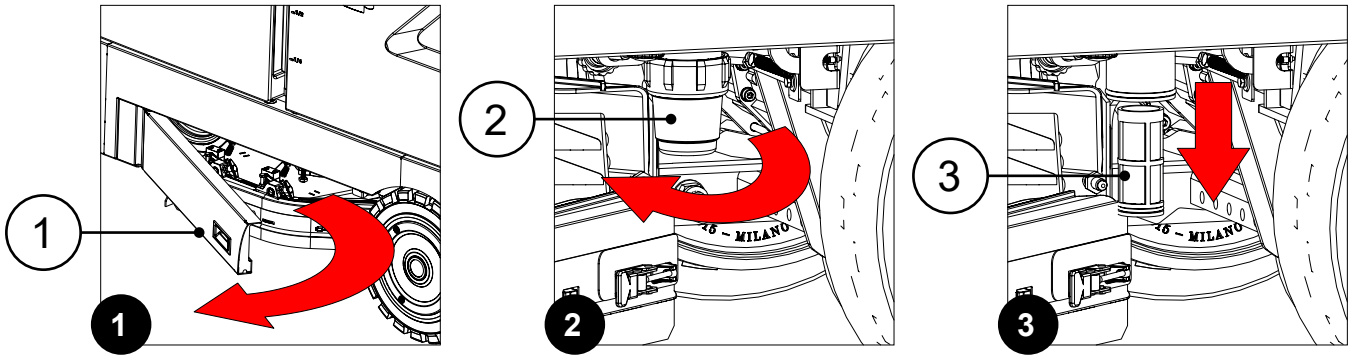

4. Rinse the filter cartridge under a jet of water, and use a brush to eliminate any impurities, if necessary.
5. Once the filter cartridge is clean, repeat the operations in the opposite order to reassemble all the parts.

EMPTYING THE SOLUTION TANK

Thoroughly cleaning the solution tank will prevent unpleasant odours from forming inside. To clean the tank, do the following:

1. Remove the solution tank drain hose (1) from the retainers (**Fig.1**).
2. Place the hose over the drain pan.

N.B.: discharges into the subsoil resulting from any work activities must only be carried out in designated areas; they must also be performed in compliance with the environmental regulations in force in the machine's country of use.

3. Gradually unscrew the cap (2) on the drainage hose (**Fig.2**).
4. Remove the filler cap (3) (**Fig.3**).

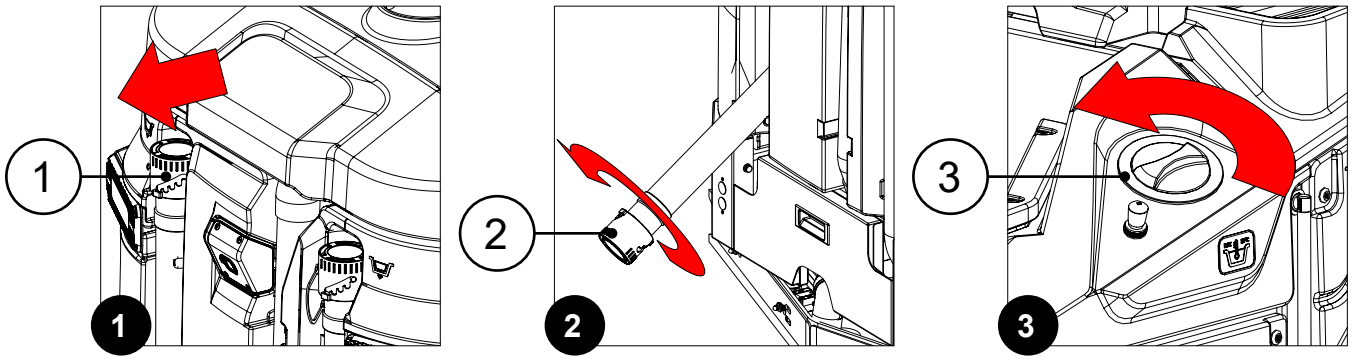

5. Clean the inside of the tank with a jet of running water.
6. Once the work has been completed, repeat the operations in reverse order to reassemble all the parts.

CLEANING THE FILTER ON THE AUTOMATIC CHEMICAL DETERGENT MANAGEMENT SYSTEM (FSS VERSION)

The thorough cleaning of the automatic chemical detergent management system filter guarantees a more effective delivery to the brushes by the detergent solution delivery system, which in turn will ensure better floor cleaning, thus decreasing costs while at the same time improving environmental sustainability and performance.

To clean the automatic chemical detergent management system filter, do the following:

1. Open the left inspection door (1) (**Fig.1**).
2. Close the automatic detergent management system's outlet flow tap by turning the lever (2) on the tap's body clockwise (**Fig.2**).
3. Remove the cap from the filter body (3) (**Fig.3**).

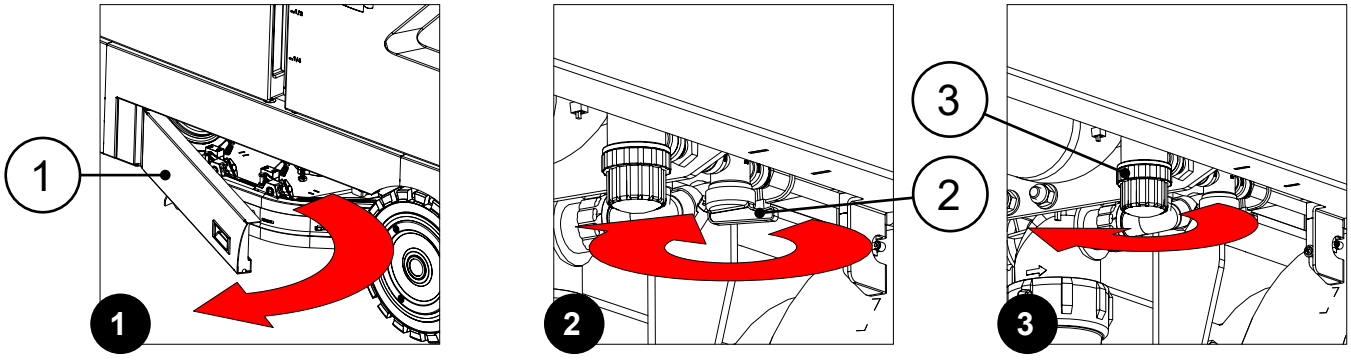

4. Remove the filter cartridge from the filter body.
5. Rinse the filter cartridge under a jet of water, and use a brush to eliminate any impurities, if necessary.
6. Once the filter cartridge is clean, repeat the operations in the opposite order to reassemble all the parts.

EMPTYING OF CHEMICAL DETERGENT TANK (FSS VERSION)

Thoroughly cleaning the chemical detergent tank will prevent unpleasant odours from forming inside. To clean the tank, do the following:

1. Open the left inspection door (1) (**Fig.1**).
2. Close the automatic detergent management system's outlet flow tap by turning the lever (2) on the tap's body clockwise (**Fig.2**).
3. Remove the cap from the filter body (3) (**Fig.3**).

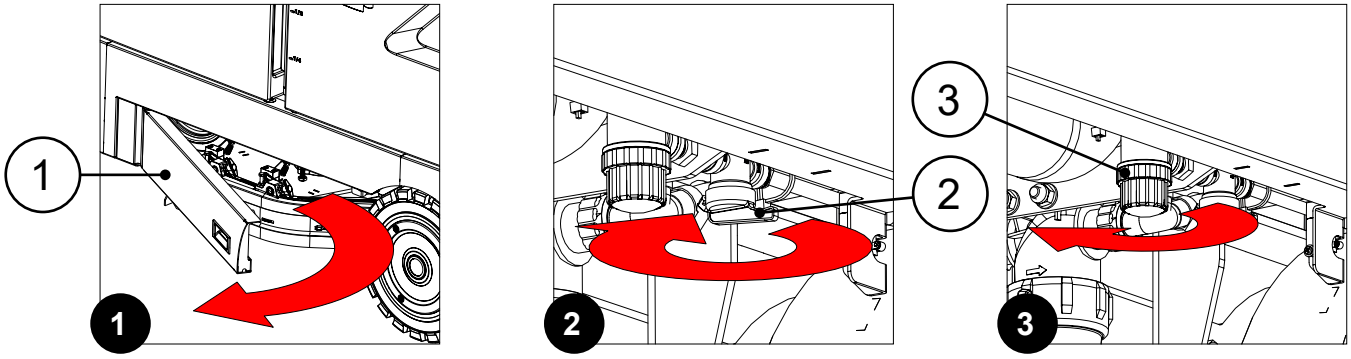

4. Remove the filter cartridge from the filter body.
5. Grasp the handle (4) and turn the battery compartment lid (5) to its maintenance position (**Fig.4**).

ATTENTION: to prevent the lid from turning, insert the retainer (6) into the slot (7) (**Fig.5**).

6. Remove the cap (8) on the top of the chemical detergent tank (**Fig. 6**).

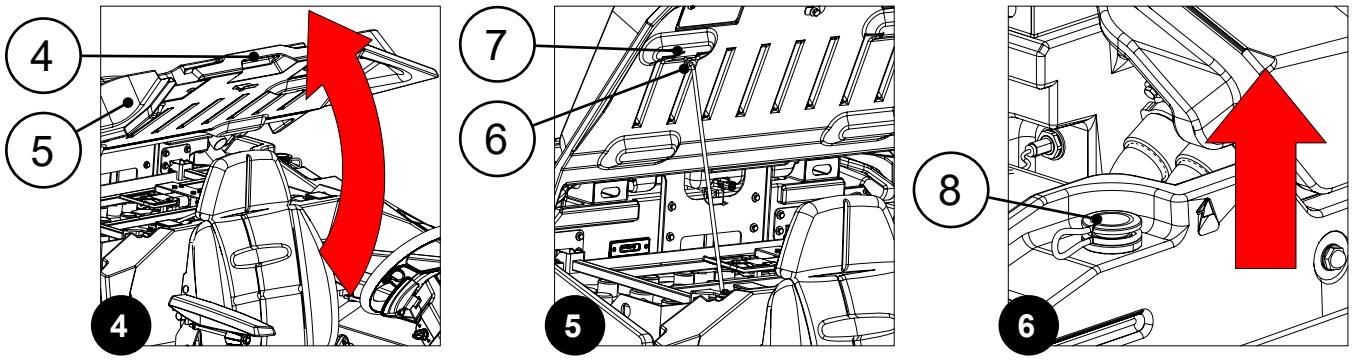

7. Open the automatic detergent management system's outlet flow tap by turning the lever (2) on the tap's body anti-clockwise.
8. Clean the inside of the chemical detergent tank with a jet of running water.
9. Once the work has been completed, repeat the operations in reverse order to reassemble all the parts.

CLEANING THE FILTER ON THE DETERGENT SOLUTION RECYCLING SYSTEM (FLR VERSION)

The thorough cleaning of the detergent solution recycling system filter guarantees a more effective delivery to the brushes by the detergent solution delivery system, which in turn will ensure better floor cleaning, thus decreasing costs while at the same time improving environmental sustainability and performance.

To clean the detergent solution recycling system filter, do the following:

1. Grasp the handle (1) and turn the recovery tank's lid (2) to its maintenance position (**Fig.1**).

ATTENTION: to prevent the lid from turning, insert the retainer (3) into the slot (4) (**Fig.2**).

2. Remove the DETERGENT SOLUTION RECYCLING SYSTEM FILTER SUPPORT (5) (**Fig.3**).

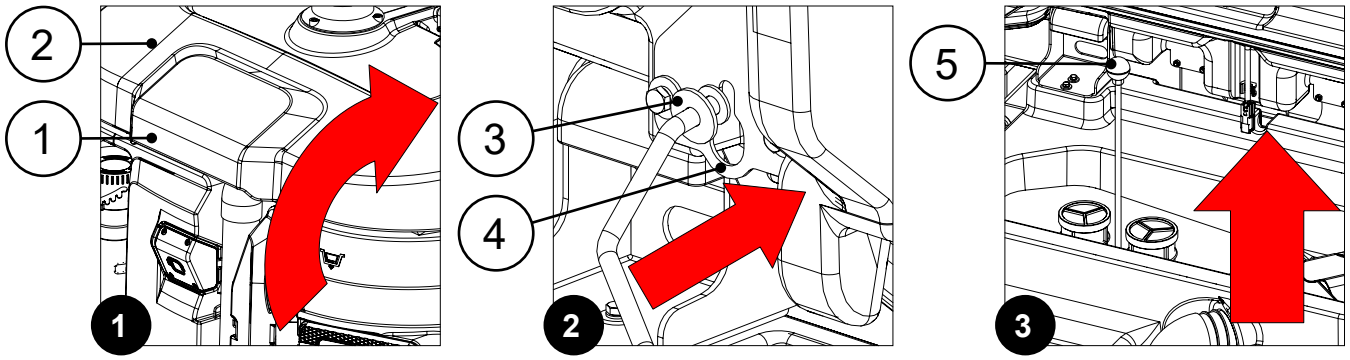

3. Clean the two filters under a stream of running water.

N.B.: Use a spatula or a brush with medium hardness bristles to eliminate any dirt that is particularly difficult to remove.

4. Repeat the operations in reverse order to reassemble all the parts.

CLEANING OF BRUSH HEAD DRIVE BRUSH - DISC (DISCOID SCRUBBING VERSIONS)

The thorough cleaning of the brush or the drive disc on the brush head will ensure better floor cleaning, thus decreasing costs while at the same time improving environmental sustainability and performance.

To clean the brush or the drive disc on the brush head, using the brush uncoupling function, do the following:

1. Grasp the handle (1) and turn the battery compartment lid (2) to its maintenance position (**Fig.1**).

ATTENTION: to prevent the lid from turning, insert the retainer (3) into the slot (4) (**Fig.2**).

ATTENTION: the following operations must be carried out by qualified personnel. An incorrect connection of the connector may cause a malfunction of the device.

2. Connect the battery charger cable connector (5) to the connector on the power cable coming from the battery box (**Fig.3**).

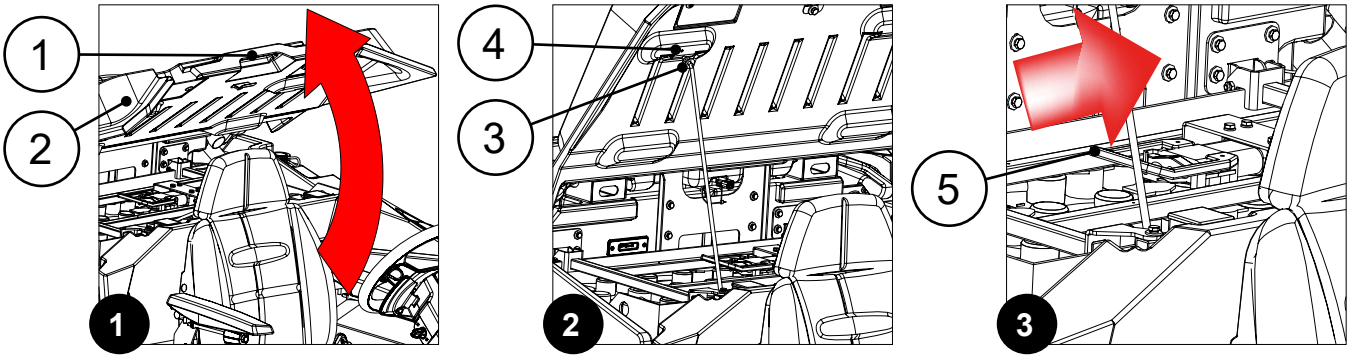

3. Grasp the battery compartment lid and turn it to its working position.

N.B.: release the retainer before turning the lid.

4. Sit on the driver's seat.
5. Insert the key (6) into the slot (7) on the right side of the column (**Fig.4**).
6. Turn on the machine and turn the key (6) a quarter turn clockwise (**Fig.5**).

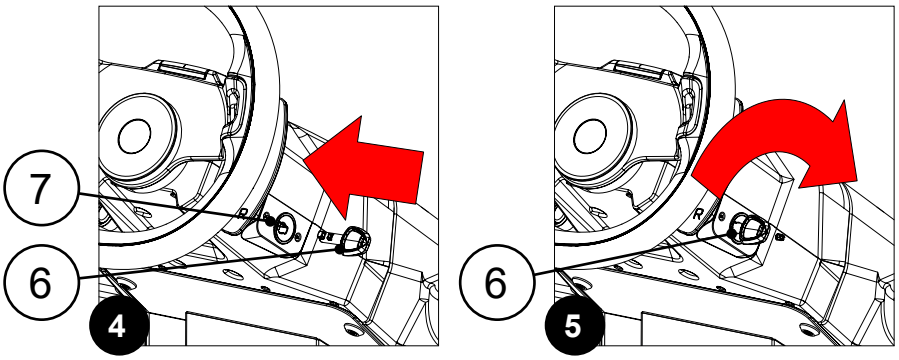

7. Activate the brush uncoupling function, see .
8. After removing the brushes or drive discs, clean them under a stream of running water to eliminate any impurities from the bristles.

N.B.: check the wear of the bristles and replace the brushes if they are excessively worn (the bristle length must not be less than 10 mm; this measurement is indicated on the brush by the yellow band), see "REPLACEMENT OF BRUSH HEAD DRIVE BRUSHES OR DISCS (DISCOID SCRUBBING VERSION)" on page 138.

9. After cleaning, refit the brush, see “ASSEMBLY OF BRUSHES OR DRIVE DISCS (DISCOID SCRUBBING VERSION)” on page 50.

N.B.: You are advised to invert the right and left-hand brushes every day.

ATTENTION: If the brushes are not new and have deformed bristles, it is better to reassemble them in the same position (the right-hand one on the right, and the left-hand one on the left), to prevent the different inclination of the bristles from producing an overload on the brush motor as well as excessive vibrations.

To clean the brush or the drive disc on the brush head, not using the brush uncoupling function, do the following:

1. Open the left inspection door (1) (**Fig.1**).
2. Set the fastening anchors (2) on the lateral splash guard support to their maintenance position, move them upwards, and turn them a quarter turn clockwise (**Fig.2**).
3. Remove the left side splash guard support (3) located in the brush head (**Fig.3**).

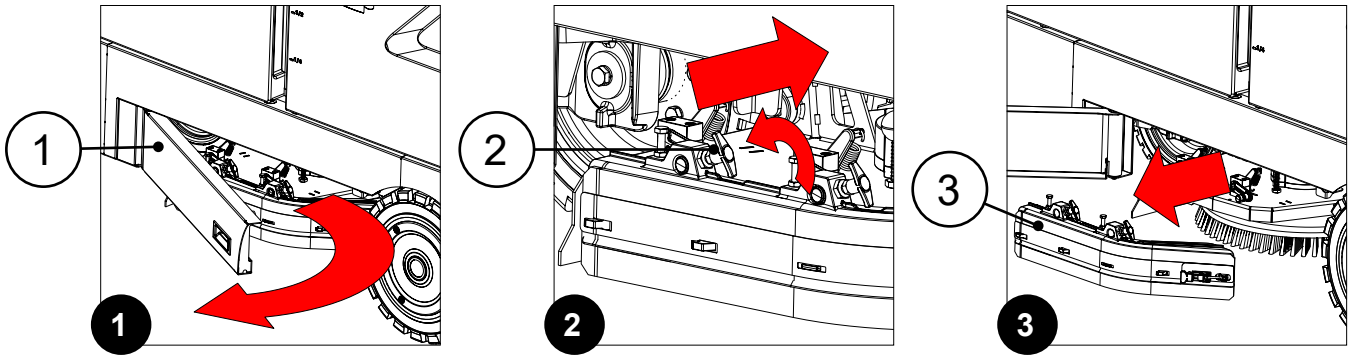

4. Keeping the pin (4) pressed, turn the brush (5) clockwise until it is locked in place (**Fig.4**).

N.B.: turn the brush quickly and firmly so as to push the button on the coupling spring outward until it releases (**Fig.4**).

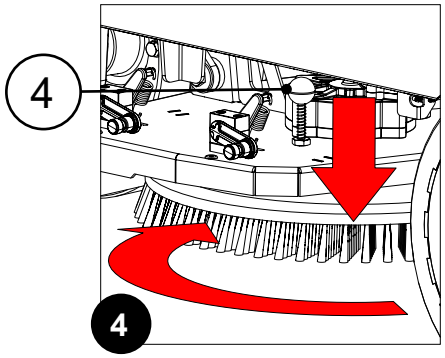

5. With the brush or drive disc removed, clean it under a stream of running water to eliminate any impurities from its bristles.

N.B.: check the wear of the bristles and replace the brushes if they are excessively worn (the bristle length must not be less than 10 mm; this measurement is indicated on the brush by the yellow band), see “REPLACEMENT OF BRUSH HEAD DRIVE BRUSHES OR DISCS (DISCOID SCRUBBING VERSION)” on page 138.

6. After cleaning, refit the brush, see “ASSEMBLY OF BRUSHES OR DRIVE DISCS (DISCOID SCRUBBING VERSION)” on page 50.

N.B.: You are advised to invert the right and left-hand brushes every day.

ATTENTION: If the brushes are not new and have deformed bristles, it is better to reassemble them in the same position (the right-hand one on the right, and the left-hand one on the left), to prevent the different inclination of the bristles from producing an overload on the brush motor as well as excessive vibrations.

7. Close the left inspection door.
8. Repeat the operation just performed on the right side as well.

CLEANING OF BRUSH HEAD SIDE SPLASH GUARD (DISCOID SCRUBBING VERSION)

The careful cleaning of the splash guards in the brush head will ensure better floor cleaning, thus decreasing costs while at the same time improving environmental sustainability and performance.

To clean the brush head splash guards, proceed as follows:

1. Open the left inspection door (1) (**Fig.1**).
2. Set the fastening anchors (2) on the lateral splash guard support to their maintenance position, move them upwards, and turn them a quarter turn clockwise (**Fig.2**).
3. Remove the left side splash guard support (3) located in the brush head (**Fig.3**).

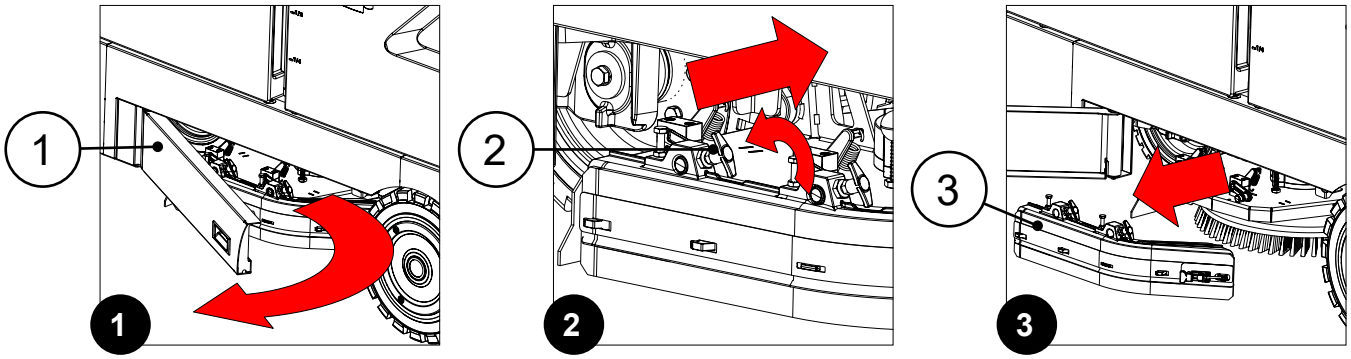

4. With the lateral splash guard support removed from the machine, clean the rubber splash guard blade with a damp cloth to eliminate any impurities present.

N.B.: check the wear of the splash guard rubber blade, if there is excessive wear replace it with a new one, see “REPLACEMENT OF BRUSH HEAD SIDE SPLASH GUARD (DISCOID SCRUBBING VERSION)” on page 139.

5. Repeat the operation just performed on the right side as well.

CLEANING OF SIDE BRUSH HEAD DRIVE BRUSH - DISC (DISCOID SCRUBBING VERSION)

The thorough cleaning of the brush or the drive disc on the side brush head will ensure better floor cleaning, thus decreasing costs while at the same time improving environmental sustainability and performance.

To replace the brush or drive disc on the side brush head, do the following:

1. Stand on the right side of the machine.
2. Moving the brush uncoupling lever (1), rotate the brush anti-clockwise until it stops (**Fig.1**).

N.B.: turn the brush quickly and firmly so as to push the button on the coupling spring outward until it releases (**Fig.2**).

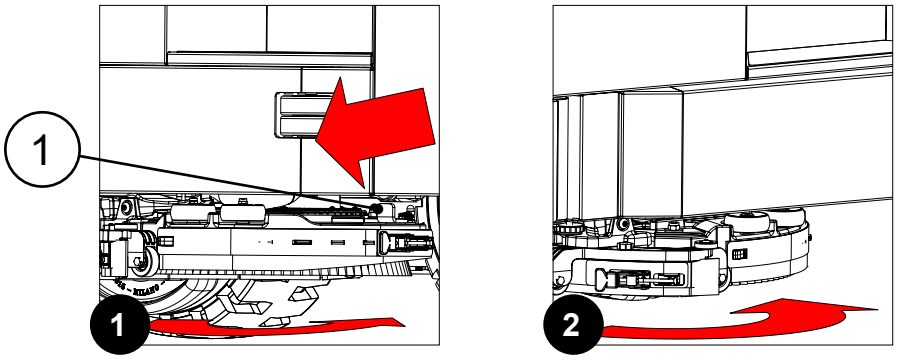

3. Clean it under a stream of running water to eliminate any impurities.

N.B.: check the wear of the bristles and replace the brush if excessively worn (the bristle length must not be less than 10 mm; this measurement is indicated on the brush by the yellow band), see "REPLACEMENT OF SIDE BRUSH HEAD DRIVE BRUSH OR DISCS (DISCOID SCRUBBING VERSION)" on page 140.

4. After cleaning, refit the brush, see "ASSEMBLY OF THE SIDE BRUSH HEAD BRUSH OR DRIVE DISCS (DISCOID SCRUBBING VERSION)" on page 54.

CLEANING OF SIDE BRUSH HEAD SPLASH GUARD (DISCOID SCRUBBING VERSION)

The careful cleaning of the splash guards in the side brush head will ensure better floor cleaning, thus decreasing costs while at the same time improving environmental sustainability and performance.

To clean the side brush head splash guards, do the following:

1. Stand on the right side of the machine.
2. Remove the rubber blade compression plate on the side brush head, and release the retainer (1) at the front of the brush head (**Fig.1**).
3. Remove the side brush head splash guard rubber blade (2) from the side brush head (**Fig.2**).

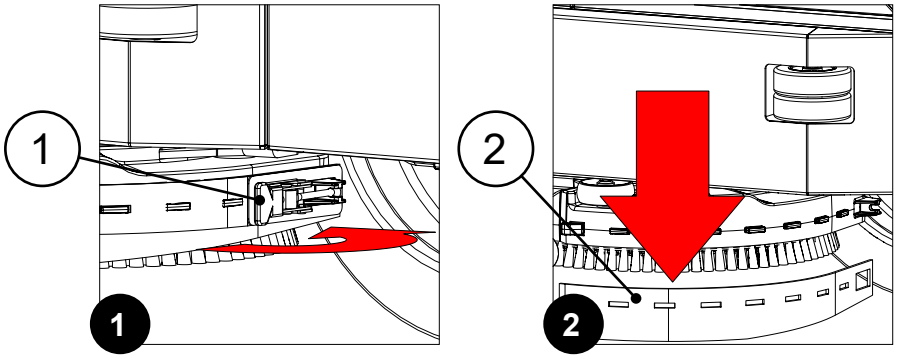

4. Clean the rubber splash guard blade with a damp cloth to eliminate any impurities present.

N.B.: check the wear of the splash guard rubber blade, if there is excessive wear replace it with a new one, see "REPLACEMENT OF SIDE BRUSH HEAD SPLASH-GUARD RUBBER BLADE (DISCOID SCRUBBING VERSION)" on page 141.

5. Repeat the operations described above in reverse order to reassemble all the parts.

CLEANING OF SIDE BRUSH HEAD SQUEEGEE (DISCOID SCRUBBING VERSION)

The careful cleaning of the whole vacuum unit ensures better drying and cleaning of the floor as well as a longer vacuum motor life.

To clean the squeegee in the side brush head, proceed as follows:

1. Open the right inspection carter (1) (**Fig.1**).
2. Turn the squeegee support (2) anti-clockwise (**Fig.2**).
3. Remove the squeegee vacuum hose (3) from the nozzle (4) in the squeegee (**Fig.3**).

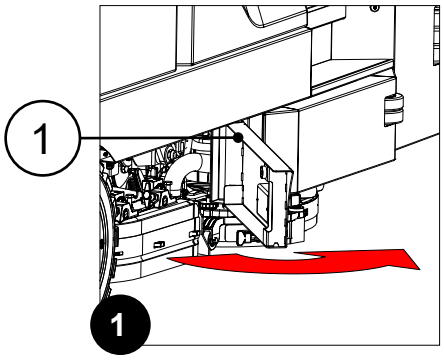

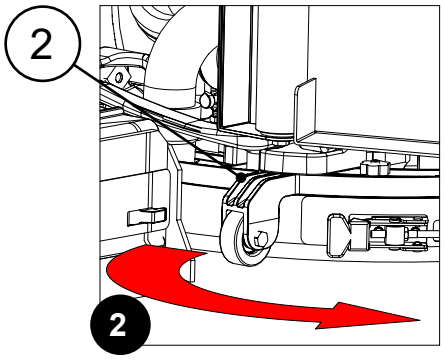

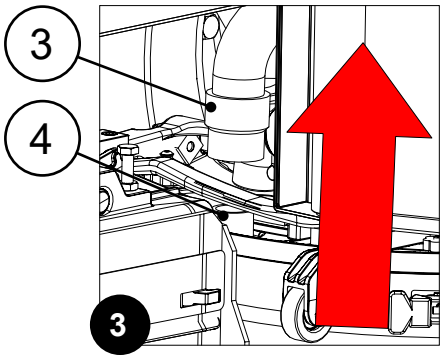

4. Completely unscrew the knobs (5) in the squeegee pre-assembly (**Fig.4**).
5. Remove the squeegee from the slits in the squeegee connector (**Fig. 5**).
6. Use a jet of water and then a damp cloth to thoroughly clean the vacuum chamber (6) (**Fig.6**).

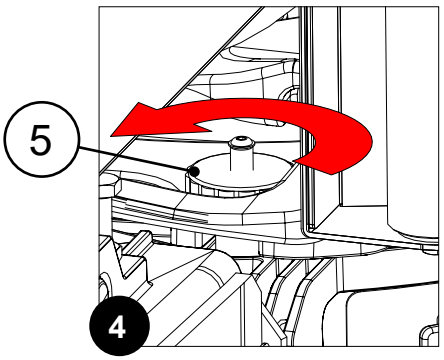

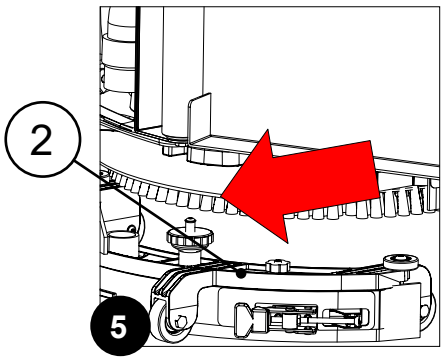

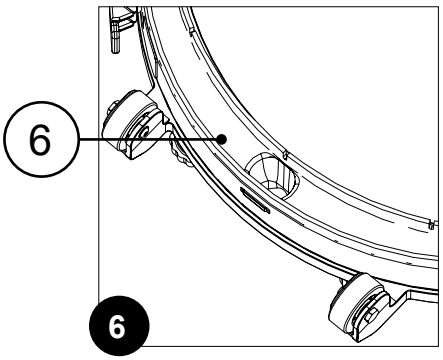

N.B.: the vacuum chamber is to be understood as the portion of the squeegee unit enclosed between the front squeegee rubber blade and the squeegee rubber blade.

N.B.: if the dirt persists, use a brush with medium hardness bristles.

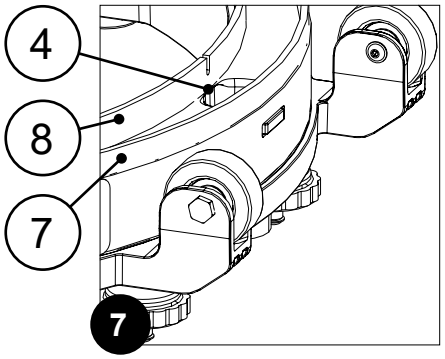

7. Use a jet of water and then a damp cloth to thoroughly clean the rear rubber blade (7) (**Fig.7**).
8. Use a jet of water and then a damp cloth to thoroughly clean the front rubber blade (8) (**Fig.7**).

N.B.: Check the integrity of the two rubber blades, and replace the squeegee rubber blades if necessary, see "REPLACEMENT OF SIDE BRUSH HEAD SQUEEGEE RUBBER BLADES (DISCOID SCRUBBING VERSION)" on page 141.

9. Use a jet of water and then a damp cloth to thoroughly clean the suction nozzle (4) (**Fig.7**).
10. Proceed in the opposite order to reassemble all the parts.

CLEANING OF BRUSH HEAD BRUSH (CYLINDRICAL SCRUBBING VERSIONS)

Careful cleaning of the brushes in the brush head will ensure better floor cleaning, thus decreasing costs while at the same time improving environmental sustainability and performance. To clean the brushes in the brush head, proceed as follows:

1. Activate the maintenance position function, see “MAINTENANCE POSITION FUNCTION” on page 85.
2. Perform all the operations required to secure the machine. See “MACHINE SAFETY” on page 35.

CAUTION: it is recommended to wear the appropriate PPE (Personal Protective Equipment), suitable for the work to be carried out.

3. Open the left inspection door (1) (**Fig.1**).
4. Set the fastening anchors (2) on the side splash guard support to their maintenance position, move them upwards, and turn them a quarter turn clockwise (**Fig.2**).
5. Remove the left side splash guard (3) from the brush head (**Fig.3**).

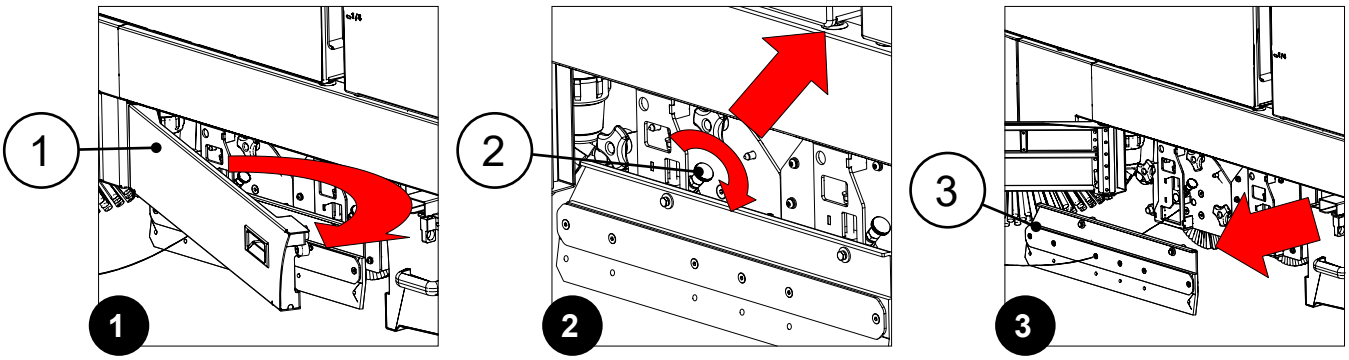

6. Remove the knobs (4) that secure the front brush support (5) (**Fig.4**).
7. Extract the front brush support (5) from the brush head (**Fig.5**).
8. Extract the brush (6) from the brush head body **Fig.6**).

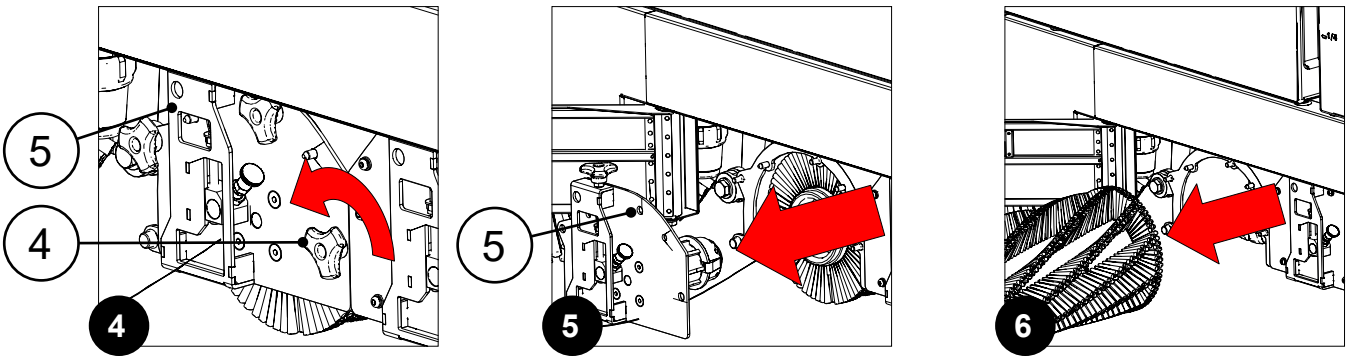

9. Clean the brush under a stream of running water to remove any impurities from its bristles.

N.B.: check the wear of the bristles and replace the brushes if they are excessively worn (the bristle length must not be less than 15 mm; this measurement is indicated on the brush by the yellow band), see “REPLACING THE BRUSH HEAD BRUSHES (CYLINDRICAL SCRUBBING VERSION)” on page 143.

10. After cleaning, refit the brush, see “FITTING OF BRUSHES (CYLINDRICAL SCRUBBING VERSION)” on page 55.

N.B.: you are advised to invert the front and rear brushes every day.

ATTENTION: If the brushes are not new, and have deformed bristles, it is better to reassemble them in the same position in order to prevent the different inclination of the bristles from overloading the brush motor, as well as to prevent excessive vibrations.

11. Close the left inspection door.
12. Repeat the operation just performed on the right side as well.

CLEANING OF BRUSH HEAD SIDE SPLASH GUARD (CYLINDRICAL SCRUBBING VERSION)

The careful cleaning of the splash guards in the brush head will ensure better floor cleaning, thus decreasing costs while at the same time improving environmental sustainability and performance.

To clean the brush head splash guards, proceed as follows:

1. Activate the maintenance position function, see “MAINTENANCE POSITION FUNCTION” on page 85.
2. Perform all the operations required to secure the machine. See “MACHINE SAFETY” on page 35.

CAUTION: it is recommended to wear the appropriate PPE (Personal Protective Equipment), suitable for the work to be carried out.

3. Open the left inspection door (1) (**Fig.1**).
4. Set the fastening anchors (2) on the side splash guard support to their maintenance position, move them upwards, and turn them a quarter turn clockwise (**Fig.2**).
5. Remove the left side splash guard (3) from the brush head (**Fig.3**).

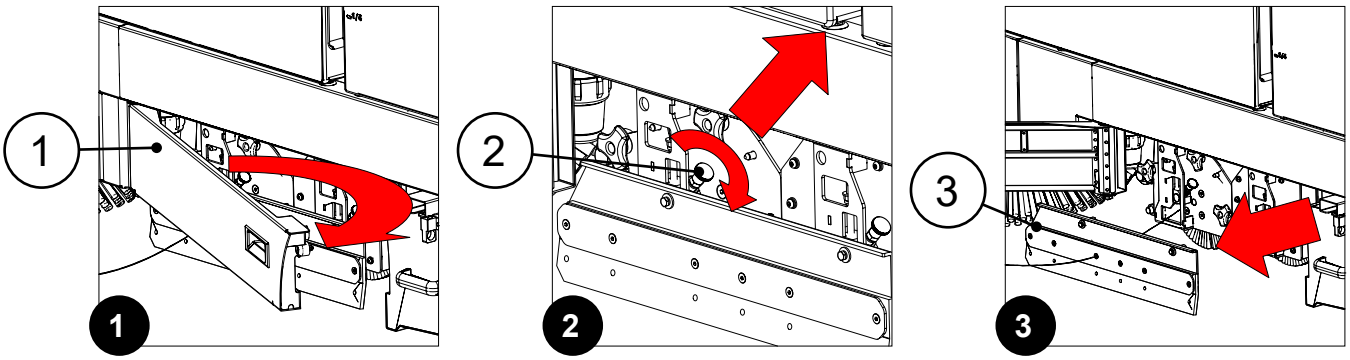

6. With the lateral splash guard support removed from the machine, clean the rubber splash guard blade with a damp cloth to eliminate any impurities present.

N.B.: check the wear of the splash guard rubber blade, if there is excessive wear replace it with a new one, see “REPLACEMENT OF BRUSH HEAD SIDE SPLASH GUARD (CYLINDRICAL SCRUBBING VERSION)” on page 143.

7. Repeat the operation just performed on the right side as well.

CLEANING THE DEBRIS HOPPER (CYLINDRICAL SCRUBBING VERSION)

The careful cleaning of the debris hopper in the brush head will ensure better floor cleaning, thus decreasing costs while at the same time improving environmental sustainability and performance.

To empty the debris hopper, proceed as follows:

1. Activate the maintenance position function, see “MAINTENANCE POSITION FUNCTION” on page 85.
2. Perform all the operations required to secure the machine. See “MACHINE SAFETY” on page 35.

CAUTION: it is recommended to wear the appropriate PPE (Personal Protective Equipment), suitable for the work to be carried out.

3. Open the left inspection door (1) (**Fig.1**).
4. Remove the debris hopper from the machine using the handle (2), before moving the hopper remember to release the debris hopper latch (3) (**Fig.2**).
5. Move the debris hopper in the place used for waste disposal using the handle (2).

N.B.: the place designated for this operation must comply with current regulations concerning safety at work and current environmental protection regulations.

6. Clean the inside of the debris hopper with a stream of running water, using a brush to remove any dirt residues if necessary.
7. Take out the debris hopper vacuum filter (4) (**Fig.3**), clean it with a jet of water, if necessary use a scraper to remove any residues of dirt.
8. Proceed in the opposite order to reassemble all the parts.

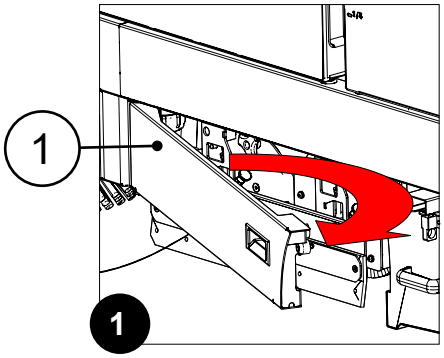

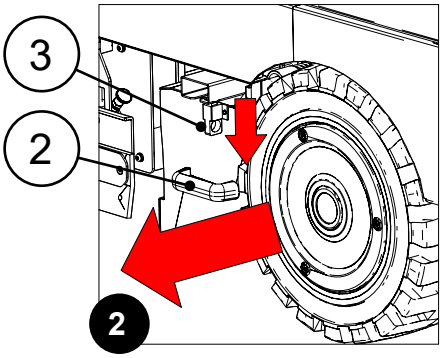

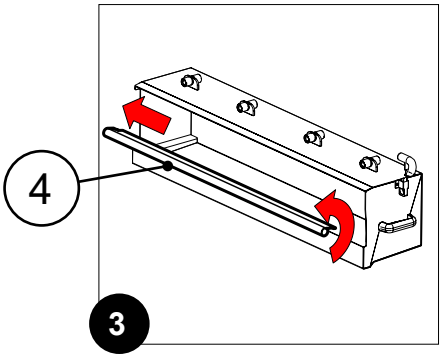

CLEANING THE SIDE BRUSH (CYLINDRICAL - COMBINED SCRUBBING VERSION)

The thorough cleaning of the brush or the drive disc on the side brush head will ensure better floor cleaning, thus decreasing costs while at the same time improving environmental sustainability and performance.

To replace the side brush, do the following:

1. Activate the maintenance position function, see “MAINTENANCE POSITION FUNCTION” on page 85.
2. Perform all the operations required to secure the machine. See “MACHINE SAFETY” on page 35.

CAUTION: it is recommended to wear the appropriate PPE (Personal Protective Equipment), suitable for the work to be carried out.

3. Stand on the left front side of the machine.
4. Remove the knob (1) fixing the side brush to the gear motor by rotating the right brush clockwise and the left brush anti-clockwise (**Fig.1**).
5. Remove the washer (2) holding the side brush in place (**Fig.2**).
6. Extract the brush from the flange and clean it under a stream of running water to remove any impurities from its bristles.

N.B.: check the bristles are not excessively worn. If necessary, replace the brush - see “REPLACEMENT OF THE SIDE BRUSH (CYLINDRICAL-COMBINED SCRUBBING VERSION)” on page 145.

7. After cleaning, reassemble the brush, making sure to correctly position the pins (3), present in the brush support, in the holes (4), present in the brush (**Fig.3**).

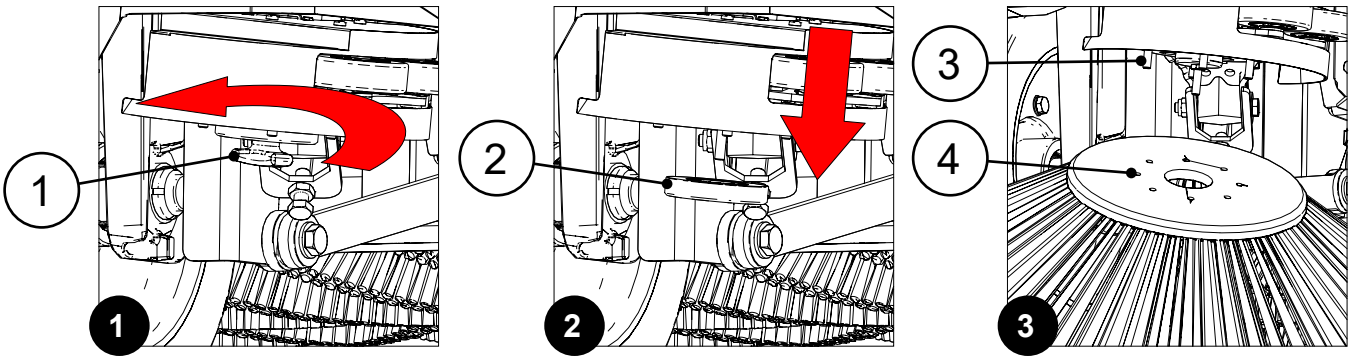

8. Fix the brush to the flange using the knob (1), remembering to put the washer (2) in between the knob and the brush.
9. Once the brush has been fitted, move on to the one on the right.

CLEANING THE BRUSH HEAD BRUSHES (COMBINED VERSION)

Careful cleaning of the brushes in the brush head will ensure better floor cleaning, thus decreasing costs while at the same time improving environmental sustainability and performance.
To clean the brushes on the brush head, proceed as follows:

1. Activate the maintenance position function, see “MAINTENANCE POSITION FUNCTION” on page 85.
2. Perform all the operations required to secure the machine. See “MACHINE SAFETY” on page 35.

CAUTION: it is recommended to wear the appropriate PPE (Personal Protective Equipment), suitable for the work to be carried out.

3. Open the left inspection door (1) (**Fig.1**).
4. Remove the knobs (2) that secure the front brush support (**Fig.2**).
5. Extract the front brush support (3) from the brush head (**Fig.3**).

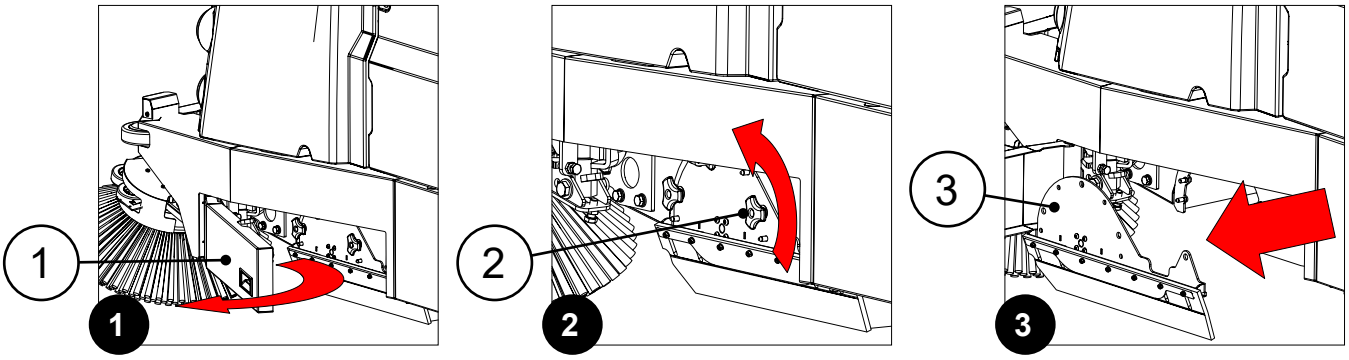

6. Remove the knobs (4) that secure the front brush support (5) (**Fig.4**).
7. Extract the front brush support (5) from the brush head (**Fig.5**).
8. Extract the brush (6) from the brush head body **Fig.6**).

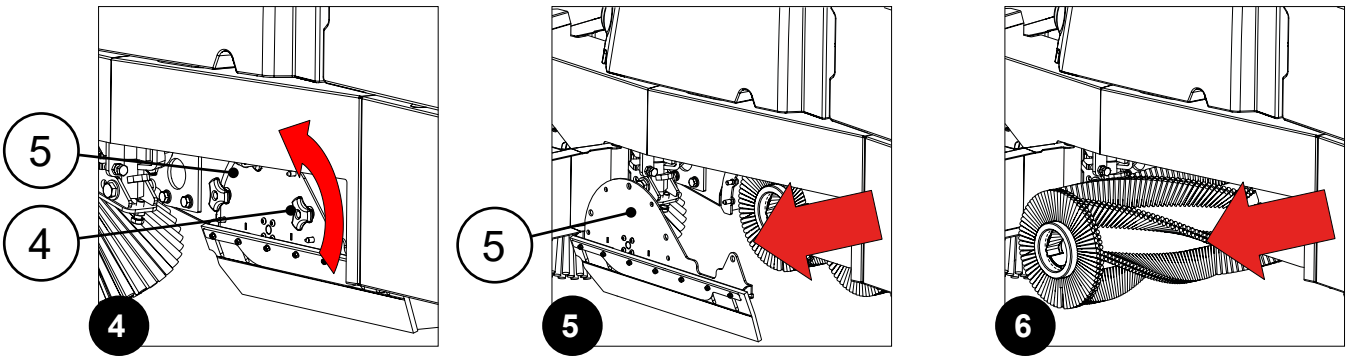

9. Clean the brush under a stream of running water to remove any impurities from its bristles.

N.B.: check the wear of the bristles and replace the brushes if they are excessively worn (the bristle length must not be less than 15 mm; this measurement is indicated on the brush by the yellow band), see “REPLACING THE SWEEPING BRUSH HEAD BRUSHES (COMBINED VERSION)” on page 146.

10. After cleaning, refit the brush, see “ASSEMBLY OF BRUSHES (COMBINED VERSION)” on page 58.

N.B.: you are advised to invert the front and rear brushes every day.

ATTENTION: If the brushes are not new, and have deformed bristles, it is better to reassemble them in the same position in order to prevent the different inclination of the bristles from overloading the brush motor, as well as to prevent excessive vibrations.

11. Close the left inspection door.
12. Repeat the operation just performed on the right side as well.

CLEANING THE DEBRIS HOPPER VACUUM FILTER (COMBINED VERSION)

Thorough cleaning of the vacuum filter guarantees enhanced efficiency and a longer working life for the vacuum motor. To clean the filter, proceed as follows:

1. Go to the front of the machine and using the moulded handles (1), remove the vacuum filter cover casing (2) (**Fig.1**).
2. Place the cover gently on the ground (2).
3. Release by turning the retaining levers (3) anti-clockwise (**Fig.2**).
4. Using the handle (4) turn the vacuum filter cover (5) to the maintenance position (**Fig.3**).

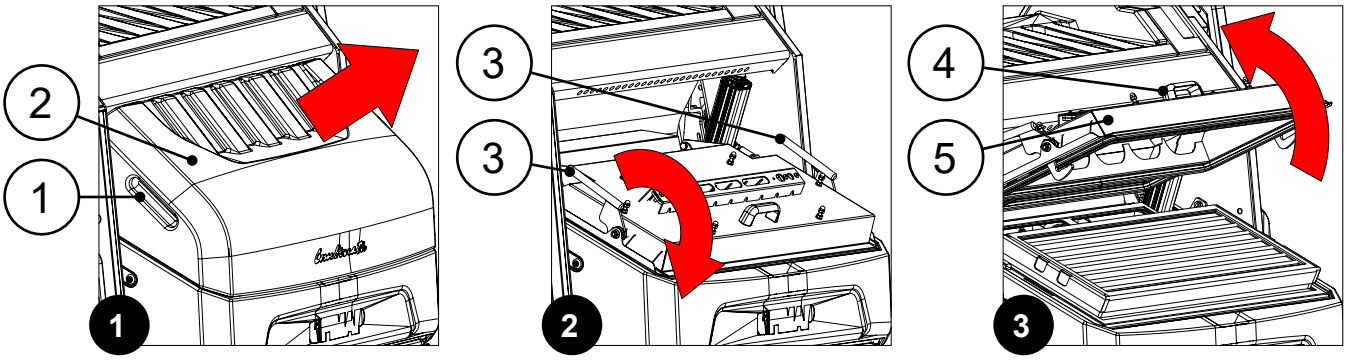

5. Remove the filter press frame (6) (**Fig.4**).
6. For machine versions with the panel filter, remove the vacuum filter (7) (**Fig.5**).
7. For machine versions with the bag filter, remove the vacuum filter (8) (**Fig.6**), taking care to disconnect the connector in the filter-shaker from the connector in the machine's electrical system, before removing it completely.

N.B.: if the vacuum filter is made of fabric, place it on a surface that can support it in a safe manner.

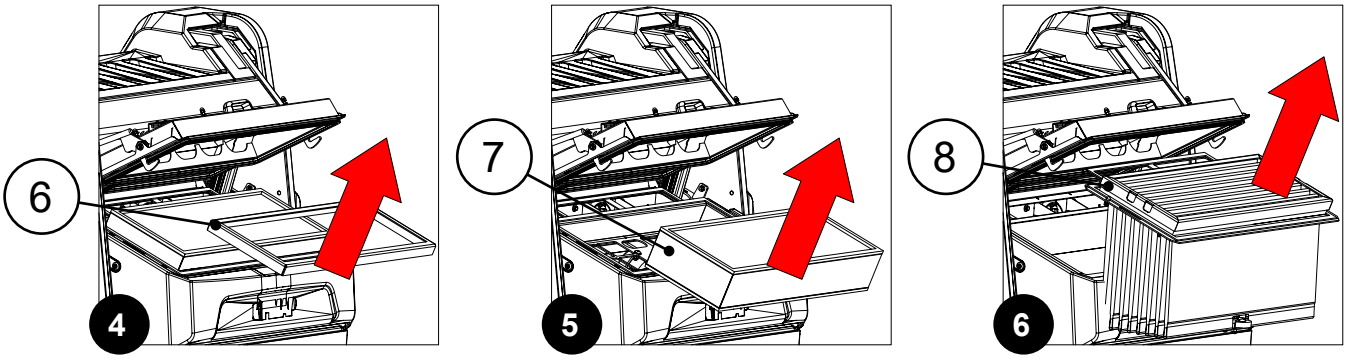

8. Clean the vacuum filter.

N.B.: if necessary, clean the vacuum filter with an air jet from inside, facing outwards, and kept at a distance of more than 20cm.

N.B.: if necessary, clean the vacuum filter with a vacuum cleaner.

N.B.: check to ensure that it is in good condition; where this is not the case, please contact the FIMAP service centre of reference or the nearest one for immediate replacement.

9. When the filter is clean, refit it by following the above steps in reverse order.

CLEANING THE DEBRIS HOPPER (COMBINED VERSION)

Careful cleaning of the debris hopper will ensure better floor cleaning, thus decreasing costs while at the same time improving environmental sustainability and performance.

To clean the debris hopper proceed as follows:

1. Grasp the handle (1) and turn the battery compartment lid (2) to its maintenance position (**Fig.1**).

ATTENTION: to prevent the lid from turning, insert the retainer (3) into the slot (4) (**Fig.2**).

ATTENTION: the following operations must be carried out by qualified personnel. An incorrect connection of the connector may cause a malfunction of the device.

2. Connect the battery charger cable connector (5) to the connector on the power cable coming from the battery box (**Fig.3**).

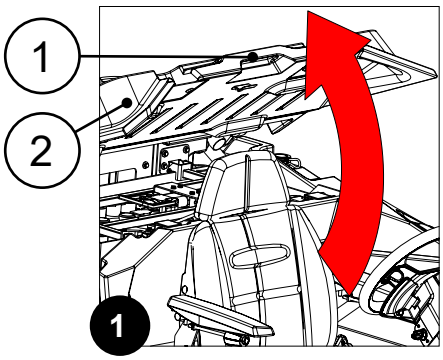

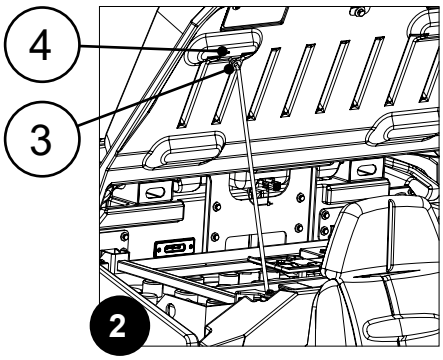

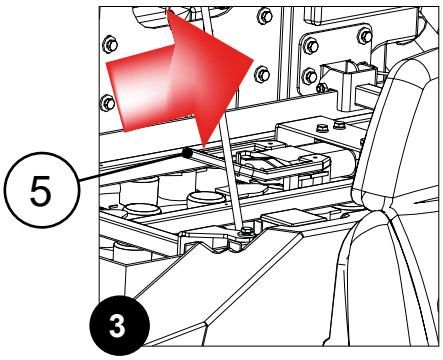

3. Grasp the battery compartment lid and turn it to its working position.

N.B.: release the retainer before turning the lid.

4. Sit on the driver's seat.
5. Insert the key (6) into the slot (7) on the right side of the column (**Fig.4**).
6. Turn on the machine and turn the key (6) a quarter turn clockwise (**Fig.5**).
7. Take the machine to the designated maintenance and cleaning location.

N.B.: the place designated for this operation must comply with current regulations concerning safety at work and current environmental protection regulations.

8. Activate the filter shaker by pressing the button "FILTER SHAKER CONTROL" (8) on the instrument panel (**Fig.6**).

WARNING: Do not keep the switch (8) pressed longer than ten seconds; repeat this operation two or three times.

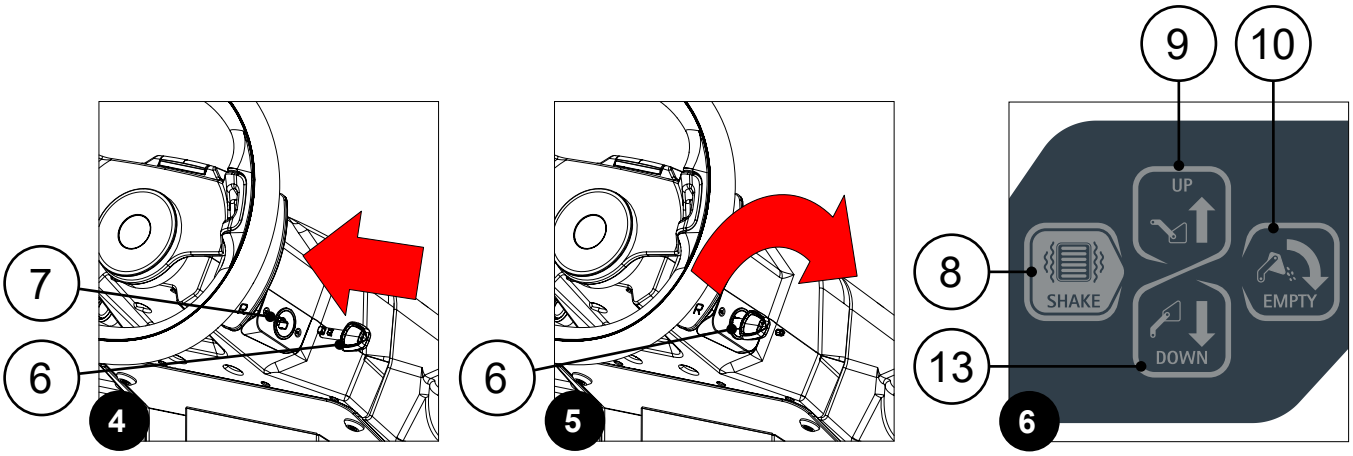

9. Check that there are no objects near the front of the machine that could be hit while rotating the debris hopper.
10. Raise the debris hopper into the maintenance position by pressing the "MOVE DEBRIS HOPPER UPWARDS" button (9) on the instrument panel (**Fig.6**).
11. Bring the machine close to the dirty water drainage hole, ensuring that the debris hopper is fully inside the drainage area.

WARNING: reduce the machine movement speed when the debris hopper is lifted off the ground.

WARNING: avoid moving the machine on a slope when the debris hopper is lifted off the ground.

WARNING: do not activate the filter shaker while the debris hopper is lifted off the ground.

12. When the debris hopper is in the cleaning position, stop the machine and rotate the debris hopper into the unloading position. Press the "DEBRIS HOPPER ROTATION" button (10) on the control panel (**Fig.6**).
13. When the debris hopper is fully rotated, turn off the machine, by turning the key (6) a quarter turn anti-clockwise (**Fig.7**).
14. Get off the machine.

CAUTION: do not position your foot above the side brush head carter while the machine is descending.

15. Remove the "DEBRIS HOPPER ROTATION STOP" (11) on the right side of the machine (**Fig.8**).
16. Insert the stop (11) in the safety position (**Fig.9**).

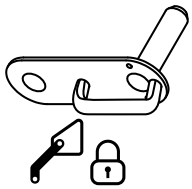

WARNING: for your own safety, never carry out maintenance on the debris hopper without the stop (11) in the safe position.

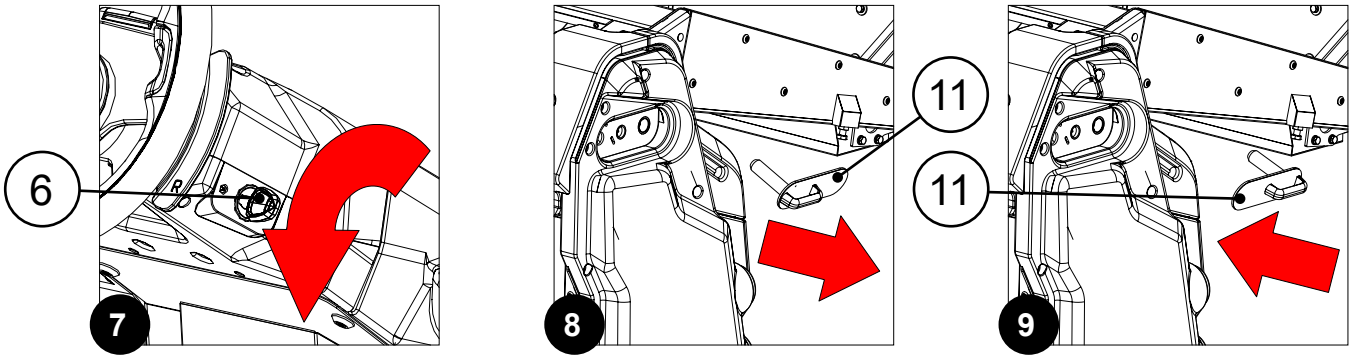

17. Clean the inside of the hopper with a jet of water.
18. When the inside of the debris hopper is clean and dry, remove the debris hopper rotation stop (11) (**Fig.10**).
19. Insert the stop (11) in the working position (**Fig.11**).

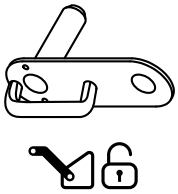

N.B.: the rotation of the debris hopper is only possible if the pin (11) is inserted correctly into the working position.

20. Sit on the driver's seat.
21. Bring the main switch to position "I" by turning the key (9) a quarter turn clockwise (**Fig.12**).

WARNING: once the machine has been turned on, the debris hopper will automatically rotate into the working position; take care to ensure that there are no objects or people near the debris hopper during this operation.

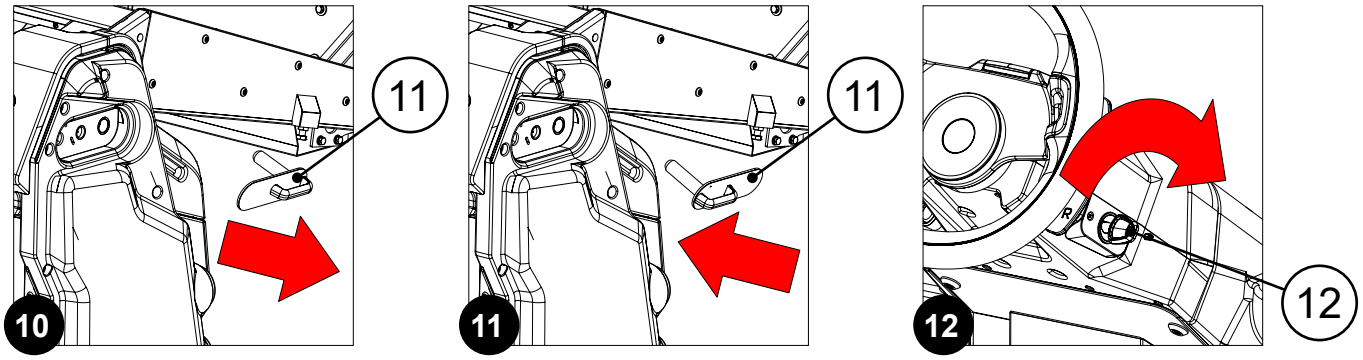

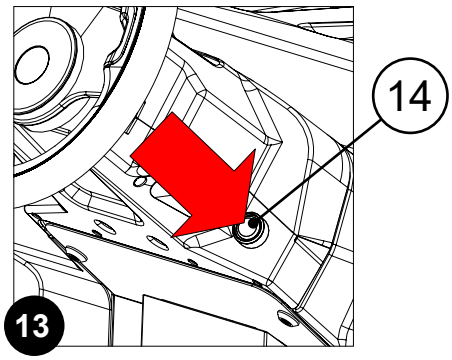

22. Lower the debris hopper whilst simultaneously pressing the "MOVE DEBRIS HOPPER DOWN" button (13) on the control panel (**Fig.6**) and the "OPERATOR PRESENCE" button (14) on the left side of the steering column (**Fig.13**).
23. When the debris hopper is in the working position, switch off the machine, turn the key (9) a quarter turn anti-clockwise (**Fig.8**).

EXTRAORDINARY MAINTENANCE WORK

Before carrying out any extraordinary maintenance operations, proceed as follows:

1. Take the machine to the maintenance area.

N.B.: the place designated for this operation must comply with current regulations concerning safety at work and current environmental protection regulations.

2. Sit on the driver's seat.
3. Insert the key (1) into the slot (2) on the right side of the column (**Fig.1**).
4. Turn on the machine and turn the key (1) a quarter turn clockwise (**Fig.2**).
5. Press the button (3) present on the control panel (**Fig.3**) to activate the SERVICE function, see "MAINTENANCE POSITION FUNCTION" on page 85.

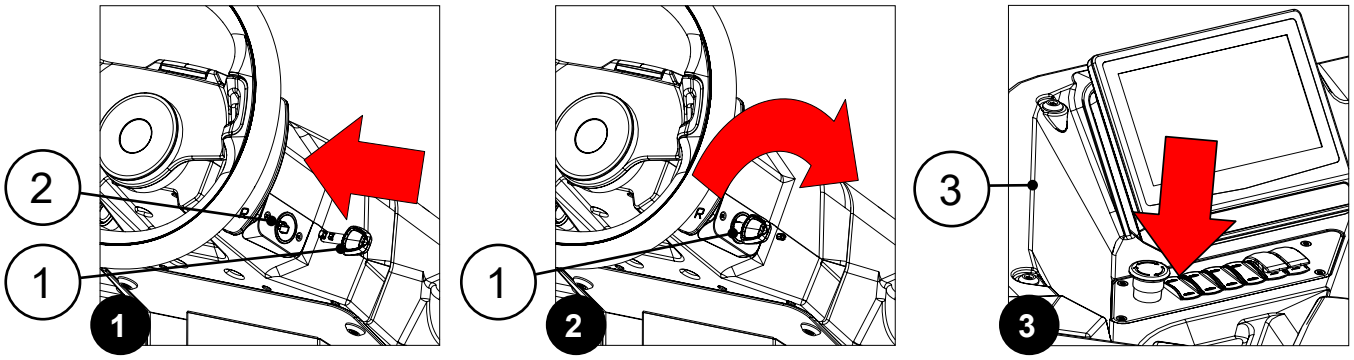

N.B.: once the maintenance sequence has been activated, it is not possible to activate other functions or move the machine.

CAUTION: make sure that no people or objects are in the machine's vicinity during this operation.

6. Bring the main switch to the "0" position by making a quarter turn anti-clockwise with the key (1) (**Fig.4**).
7. Remove the key from the instrument panel.
8. Get off the machine.
9. Remove the key from the instrument panel.
10. Get off the machine.

CAUTION: do not position your foot above the side brush head carter while the machine is descending.

11. Grasp the handle (4) and turn the battery compartment carter (5) to its maintenance position (**Fig.5**).

ATTENTION: to prevent the lid from turning, insert the retainer (6) into the slot (7) (**Fig.6**).

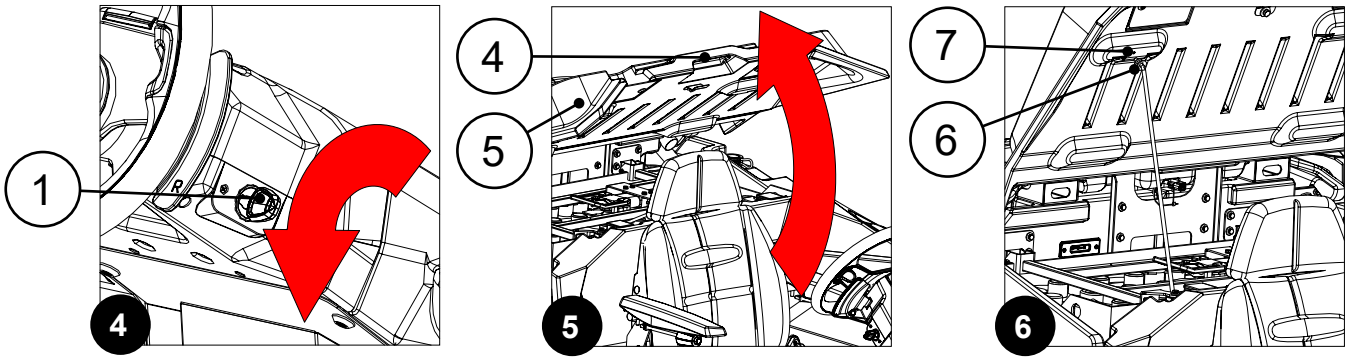

ATTENTION: the following operations must be carried out by qualified personnel. Incorrect operations could result in machine malfunctions.

12. Disconnect the machine's electrical system wiring connector (8) from the connector on the power cable coming from the battery box (**Fig. 7**).
13. Grasp the battery compartment lid and turn it to its working position.

N.B.: release the retainer before turning the lid.

14. Set the detergent solution flow to its OFF position by turning the lever (9) under the operator's seat clockwise (**Fig. 8**).

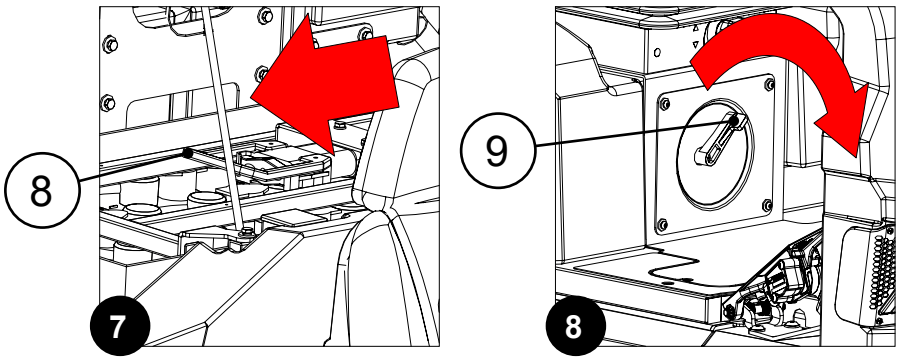

CAUTION: it is recommended to wear the appropriate PPE (Personal Protective Equipment), suitable for the work to be carried out.

REPLACING THE SQUEEGEE RUBBER BLADES

Intact squeegee rubber blades will ensure better floor cleaning, thus decreasing costs while at the same time improving environmental sustainability and performance.
To replace the squeegee rubber blades, do the following:

1. Remove the vacuum hose (1) from the sleeve (2) in the squeegee (**Fig.1**).
2. Unscrew the knobs (3) in the squeegee pre-assembly (**Fig.2**).
3. Extract the squeegee body the support on the machine (**Fig.3**).

N.B.: it is advised to replace both squeegee rubber blades in order to ensure good results when drying the floor.

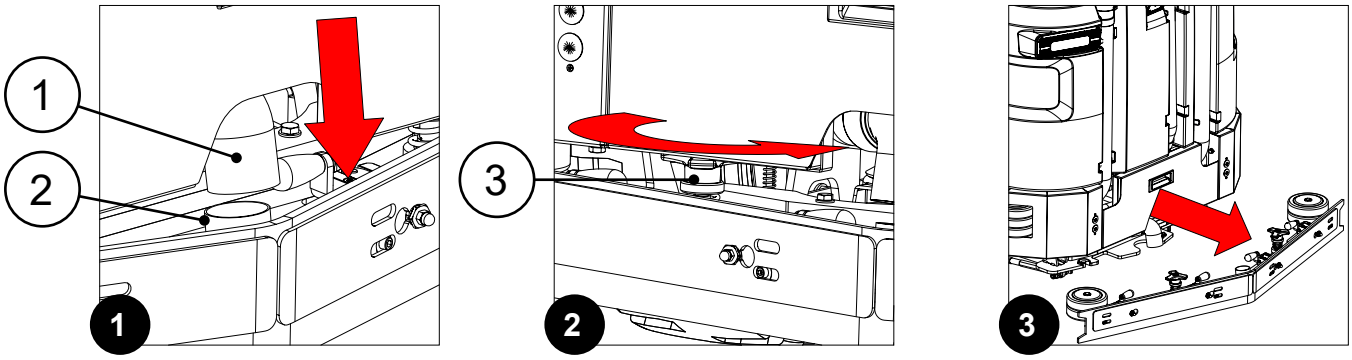

To replace the rear rubber blade, do the following:

- Release the squeegee retainer (4) (**Fig.4**).
- Remove the rubber blade compression plate (5) and the rear rubber blade (6) from the squeegee (7) (**Fig.5**).
- Replace the worn rear rubber blade with the new one.

- Position the rear rubber blade in the squeegee and secure it in place using the rubber blade compression plate (5).
- Block the rubber blade compression plate (5) by fixing the squeegee retainer (4).

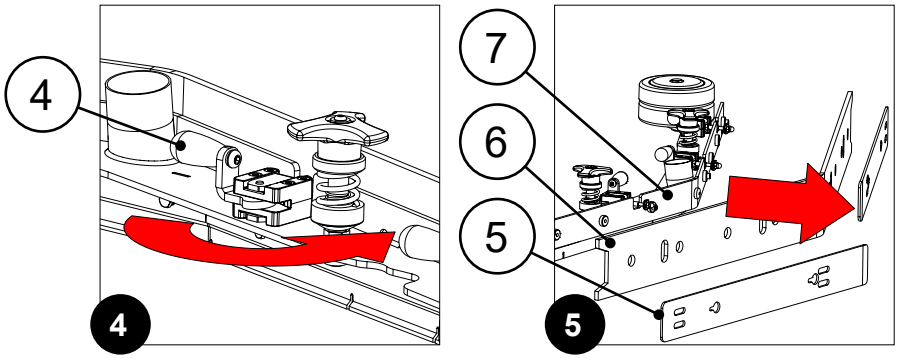

To replace the front rubber blade, do the following:

- Using the appropriate tools, not supplied along with the machine, unscrew the screws (8) securing the rubber blade compression plate (9) to the squeegee (7) (**Fig.6**).
- Remove the rubber blade compression plate (9) and the front rubber blade (10) from the squeegee (7) (**Fig.7**).
- Replace the worn front rubber blade with the new one.
- Position the front rubber blade (10) in the squeegee (7) and secure it in place using the rubber blade compression plate (9).
- Secure the rubber blade compression plate in place by inserting and tightening the screws (8) previously removed.

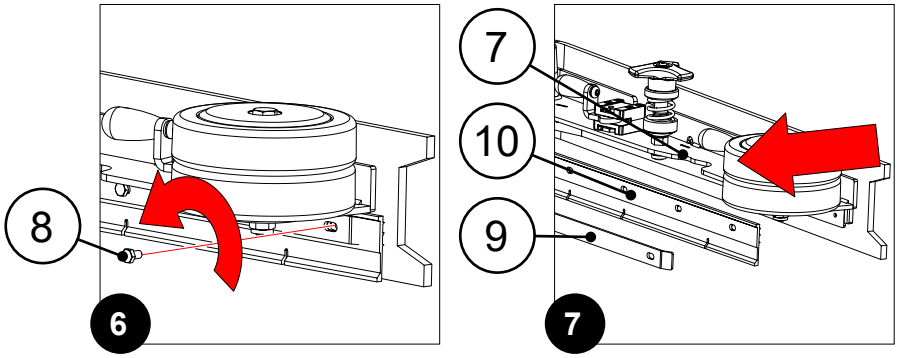

4. Insert the squeegee into the machine.

N.B.: check the adjustment of the rubber blades in the squeegee, if necessary see “ADJUSTING THE SQUEEGEE RUBBER BLADES” on page 148.

N.B.: it is advised to replace both squeegee rubber blades in order to ensure good results when drying the floor.

REPLACEMENT OF BRUSH HEAD DRIVE BRUSHES OR DISCS (DISCOID SCRUBBING VERSION)

Ensuring the brush or the drive disc on the brush head is intact will ensure better floor cleaning, thus decreasing costs while at the same time improving environmental sustainability and performance.

To replace the brush or the drive disc on the brush head, using the brush uncoupling function, do the following:

1. Grasp the handle (1) and turn the battery compartment lid (2) to its maintenance position (**Fig.1**).

ATTENTION: to prevent the lid from turning, insert the retainer (3) into the slot (4) (**Fig.2**).

ATTENTION: the following operations must be carried out by qualified personnel. An incorrect connection of the connector may cause a malfunction of the device.

2. Connect the battery charger cable connector (5) to the connector on the power cable coming from the battery box (**Fig.3**).

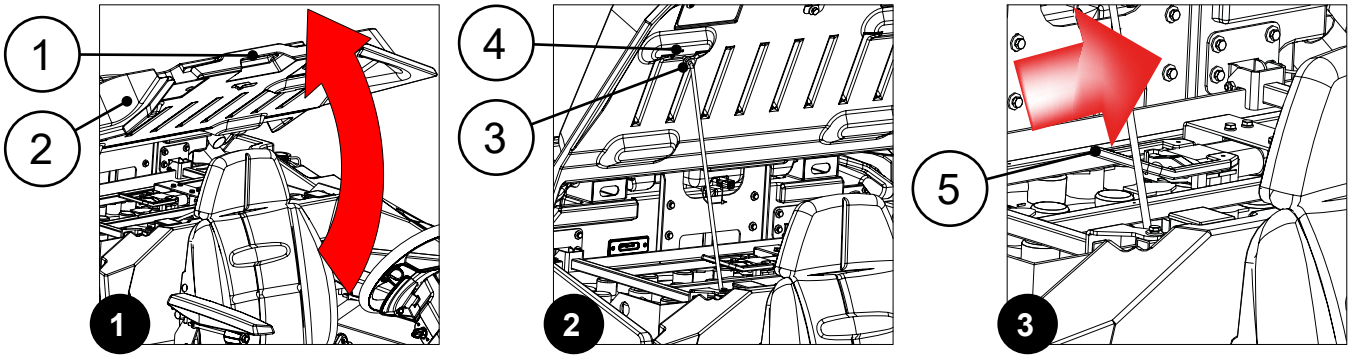

3. Grasp the battery compartment lid and turn it to its working position.

N.B.: release the retainer before turning the lid.

4. Sit on the driver's seat.
5. Insert the key (6) into the slot (7) on the right side of the column (**Fig.4**).
6. Turn on the machine and turn the key (6) a quarter turn clockwise (**Fig.5**).

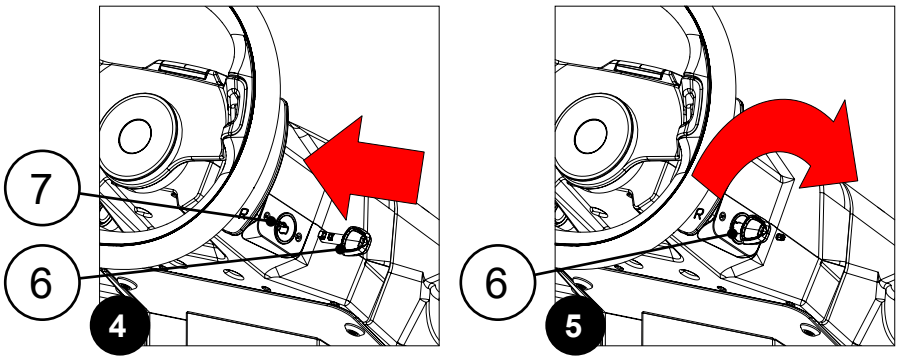

7. Activate the brush release function, see "BRUSH UNCOUPLING FUNCTION (DISCOID SCRUBBING VERSION)" on page 86.
8. After removing the worn brushes or drive discs, replace them with new ones, see "ASSEMBLY OF BRUSHES OR DRIVE DISCS (DISCOID SCRUBBING VERSION)" on page 50.

To replace the brush or the drive disc on the brush head, not using the brush uncoupling function, do the following:

1. Open the left inspection door (1) (**Fig.1**).
2. Set the fastening anchors (2) on the lateral splash guard support to their maintenance position, move them upwards, and turn them a quarter turn clockwise (**Fig.2**).
3. Remove the left side splash guard support (3) located in the brush head (**Fig.3**).

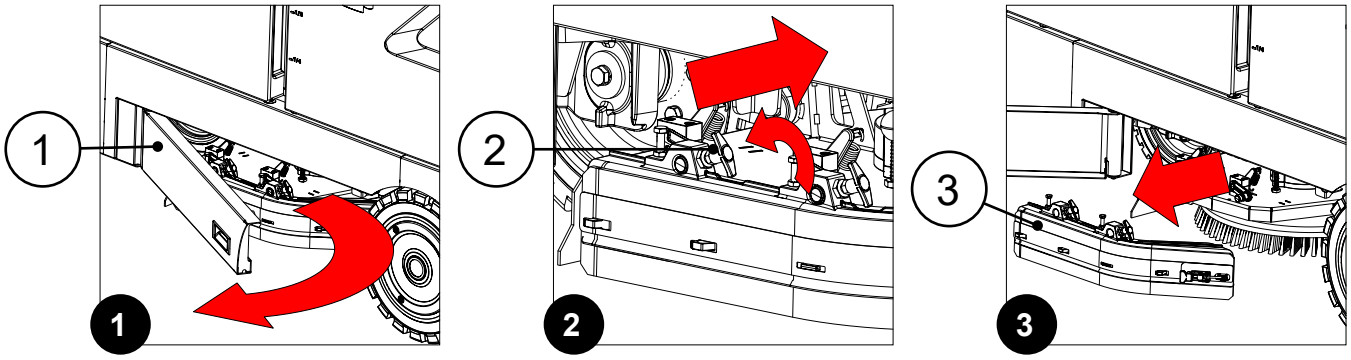

4. Keeping the pin (4) pressed, turn the brush (5) clockwise until it is locked in place (**Fig.4**).

N.B.: turn the brush quickly and firmly so as to push the button on the coupling spring outward until it releases (**Fig.4**).

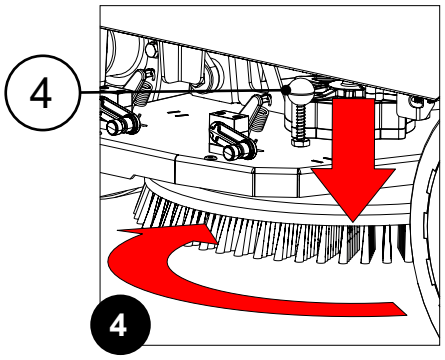

5. After removing the worn brushes or drive discs, replace them with new ones, see "ASSEMBLY OF BRUSHES OR DRIVE DISCS (DISCOID SCRUBBING VERSION)" on page 50.
6. Close the left inspection door.
7. Repeat the operation just performed on the right side as well.

REPLACEMENT OF BRUSH HEAD SIDE SPLASH GUARD (DISCOID SCRUBBING VERSION)

Intact side splash guards will ensure better floor cleaning, thus decreasing costs while at the same time improving environmental sustainability and performance. To replace the side splash guards, do the following:

1. Open the left inspection door (1) (**Fig.1**).
2. Set the fastening anchors (2) on the side splash guard support to their maintenance position, move them upwards, and turn them a quarter turn clockwise (**Fig.2**).
3. Remove the left side splash guard support (3) located in the brush head (**Fig.3**).

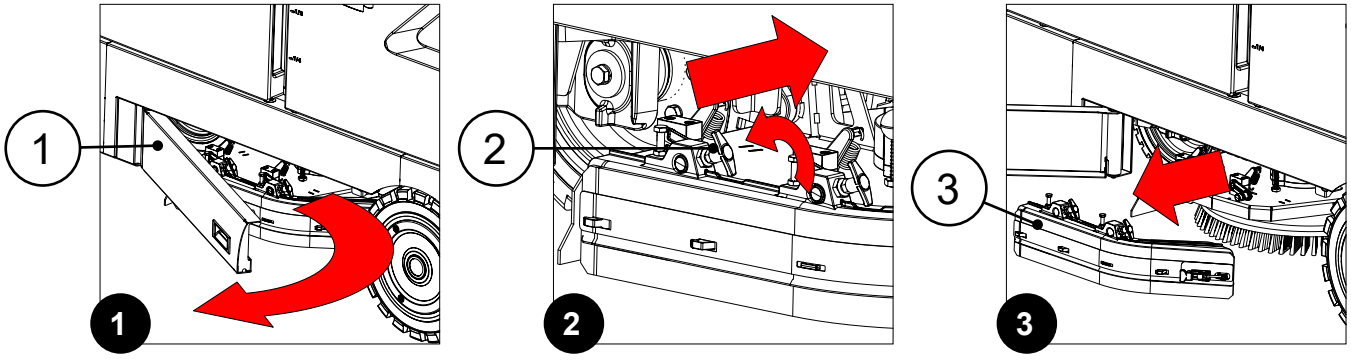

4. Release the retainer (4) on the rubber blade compression plate (5) (**Fig.4**).
5. Remove the rubber blade compression plate (5) and the splash guard (6) from the splash guard support (3) (**Fig.5**).
6. Replace the worn splash guard with the new one.
7. Position the splash guard (6) on the splash guard support (3) and secure it with the rubber blade compression plate (5).
8. Lock the rubber blade compression plate in place by fastening its retainer (4).

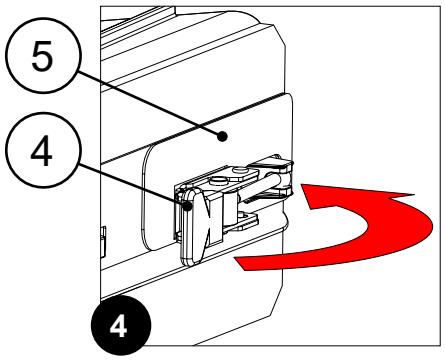

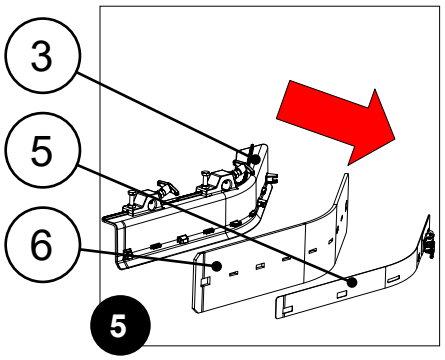

9. Insert the left side splash guard bracket into the brush head.
10. Close the left inspection door.
11. Repeat the operations just carried out for the right lateral splash guard support as well.

REPLACEMENT OF SIDE BRUSH HEAD DRIVE BRUSH OR DISCS (DISCOID SCRUBBING VERSION)

An intact brush will ensure better floor cleaning, thus decreasing costs while at the same time improving environmental sustainability and performance. To replace the side brush, do the following:

1. Moving the brush uncoupling lever (1), rotate the brush anti-clockwise until it stops (**Fig.1**).

N.B.: turn the brush quickly and firmly so as to push the button on the coupling spring outward until it releases (**Fig.2**).

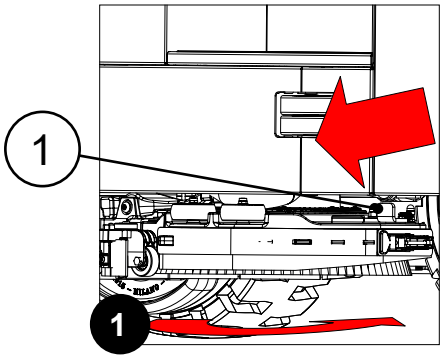

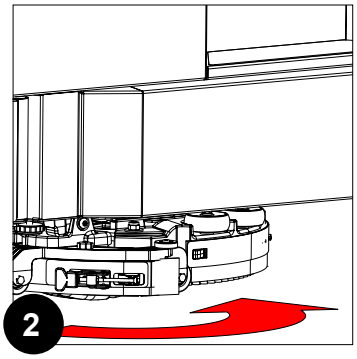

2. Replace the worn brush with a new one.

REPLACEMENT OF SIDE BRUSH HEAD SPLASH-GUARD RUBBER BLADE (DISCOID SCRUBBING VERSION)

An intact splash guard will ensure better floor cleaning, thus decreasing costs while at the same time improving environmental sustainability and performance. To replace the side brush head splash guard, do the following:

1. Release the retainer (1) on the rubber blade compression plate (2) (**Fig.1**).
2. Remove the rubber blade compression plate (2) and the splash guard from the splash guard support (3) (**Fig.2**).
3. Replace the worn splash guard with the new one.
4. Position the splash guard (3) on the splash guard support and secure it with the rubber blade compression plate (2) (**Fig.3**).

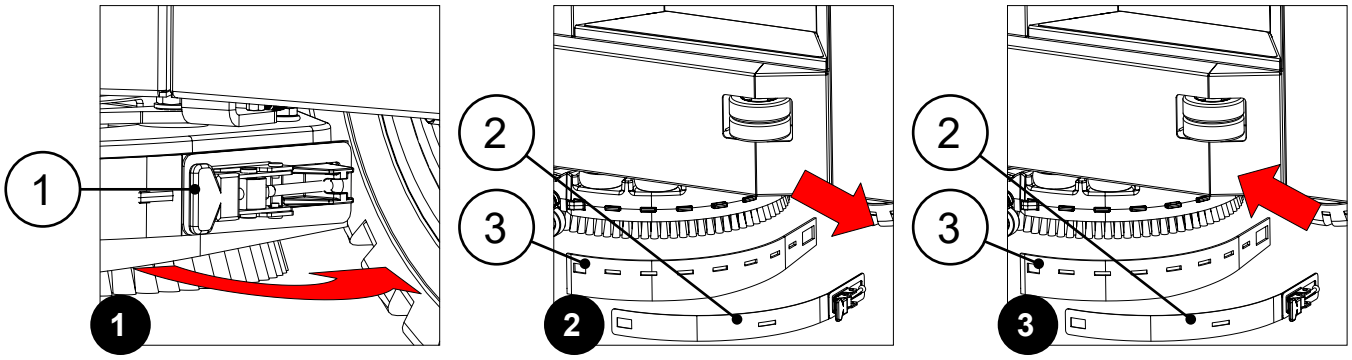

5. Lock the rubber blade compression plate in place by fastening its retainer.

REPLACEMENT OF SIDE BRUSH HEAD SQUEEGEE RUBBER BLADES (DISCOID SCRUBBING VERSION)

Intact side brush head squeegee rubber blades will ensure better floor cleaning, thus decreasing costs while at the same time improving environmental sustainability and performance.
To replace the side brush head squeegee rubber blades, do the following:

1. Open the right inspection carter (1) (**Fig.1**).
2. Turn the squeegee support (2) anti-clockwise (**Fig.2**).
3. Remove the squeegee vacuum hose (3) from the nozzle (4) in the squeegee (**Fig.3**).

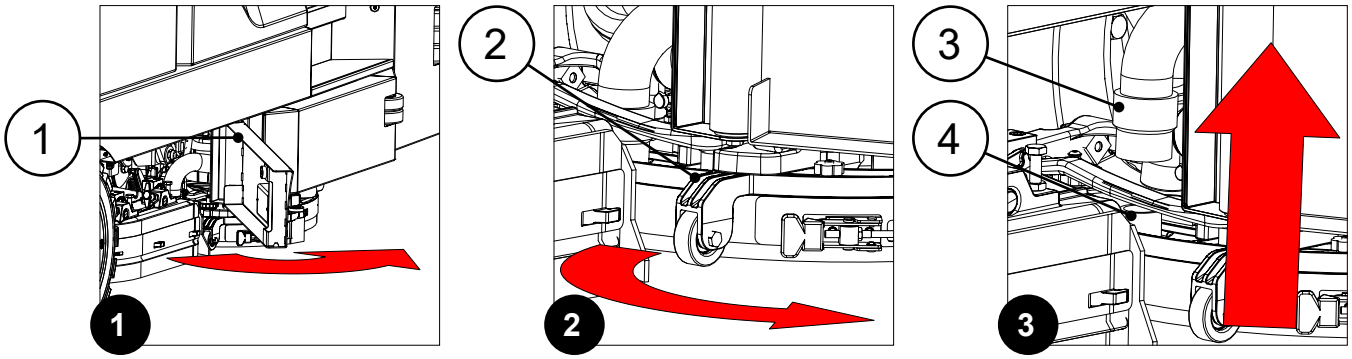

4. Completely unscrew the knobs (5) in the squeegee pre-assembly (**Fig.4**).
5. Remove the squeegee pre-assembly (2) from the slits in the squeegee connector (**Fig. 5**).
6. Remove the rear rubber blade compression plate, and release the retainer (6) at the rear of the squeegee (**Fig.6**).

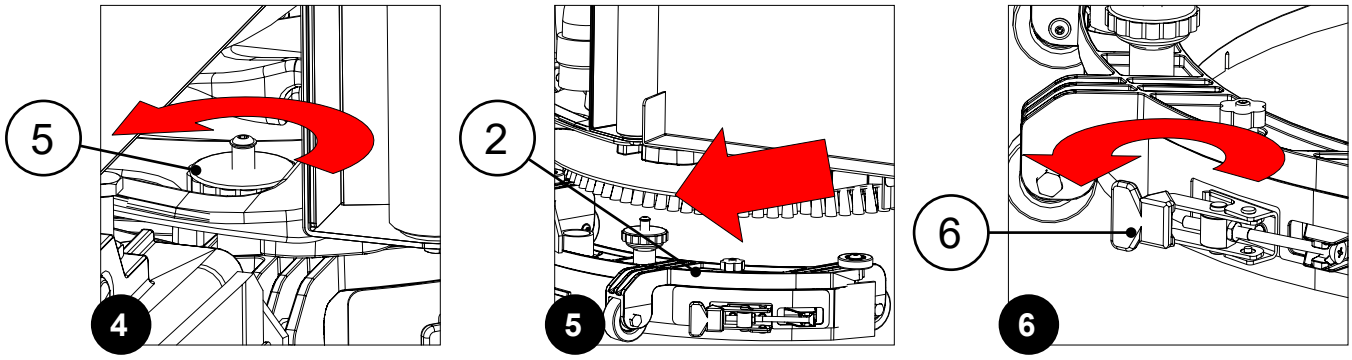

7. Remove the rear rubber blade (7) from the squeegee (**Fig.7**) and replace it with the new one.
8. Completely unscrew the knobs (8) in the squeegee pre-assembly (**Fig.8**).
9. Remove the front rubber blade (9) from the squeegee body's interior (**Fig.9**) and replace it with the new one.

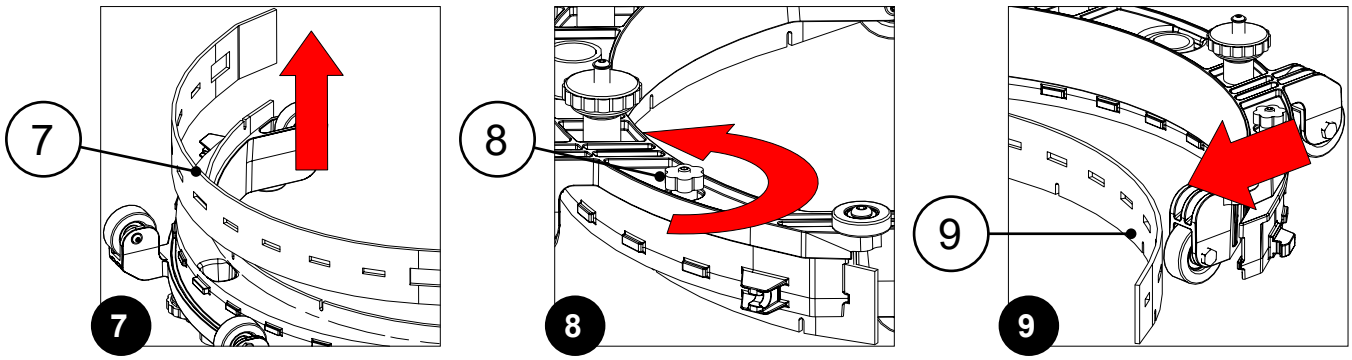

10. Repeat the operations in reverse order to reassemble all the parts.

N.B.: it is advised to replace both squeegee rubber blades in order to ensure good results when drying the floor.

REPLACING THE BRUSH HEAD BRUSHES (CYLINDRICAL SCRUBBING VERSION)

To replace the brushes in the brush head, proceed as follows:

1. Open the left inspection door (1) (**Fig.1**).
2. Set the fastening anchors (2) on the side splash guard support to their maintenance position, move them upwards, and turn them a quarter turn clockwise (**Fig.2**).
3. Remove the left side splash guard (3) from the brush head (**Fig.3**).

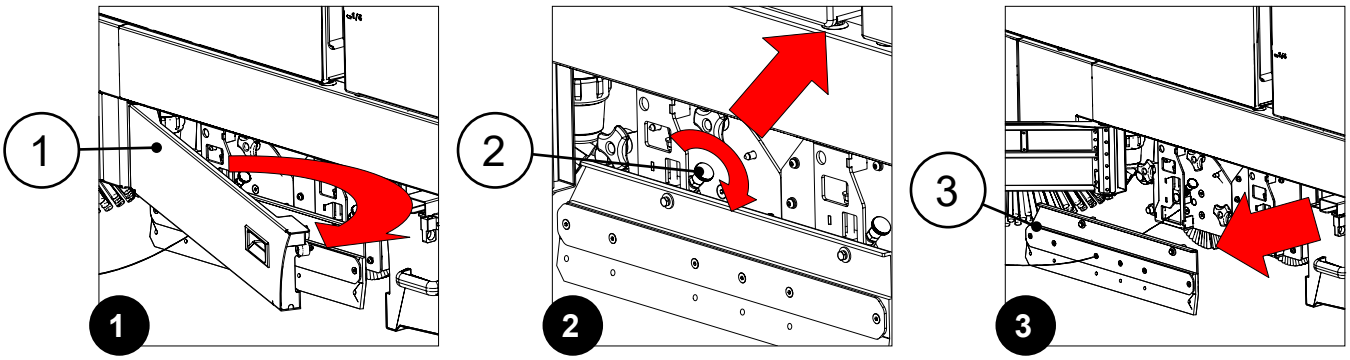

4. Remove the knobs (4) that secure the front brush support (5) (**Fig.4**).
5. Extract the front brush support (5) from the brush head (**Fig.5**).
6. Extract the brush from the brush head body **Fig.6**).

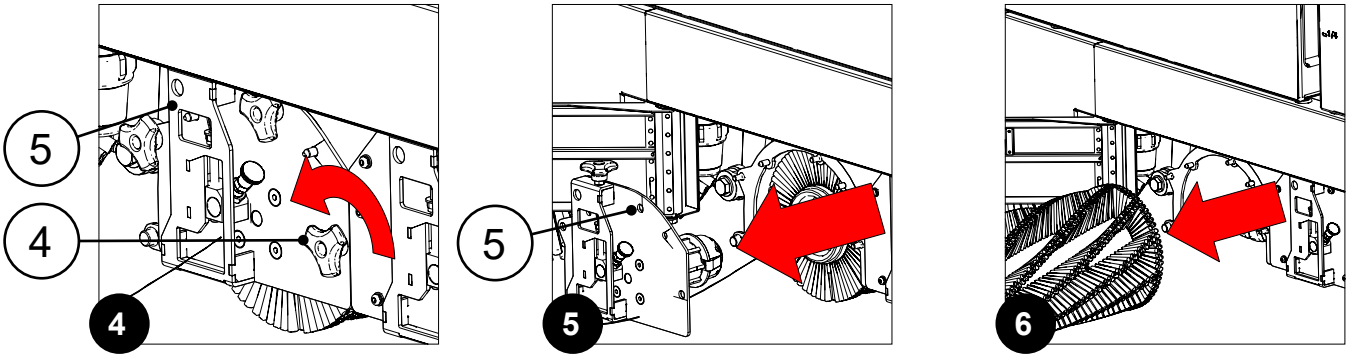

7. Replace the worn brush with a new one, see “FITTING OF BRUSHES (CYLINDRICAL SCRUBBING VERSION)” on page 55.
8. After replacing the front brush, reassemble everything.
9. Repeat the operation just performed on the right side as well.

REPLACEMENT OF BRUSH HEAD SIDE SPLASH GUARD (CYLINDRICAL SCRUBBING VERSION)

Intact side splash guards will ensure better floor cleaning, thus decreasing costs while at the same time improving environmental sustainability and performance. To replace the side splash guards, do the following:

1. Open the left inspection door (1) (**Fig.1**).
2. Set the fastening anchors (2) on the side splash guard support to their maintenance position, move them upwards, and turn them a quarter turn clockwise (**Fig.2**).
3. Remove the left side splash guard (3) from the brush head (**Fig.3**).

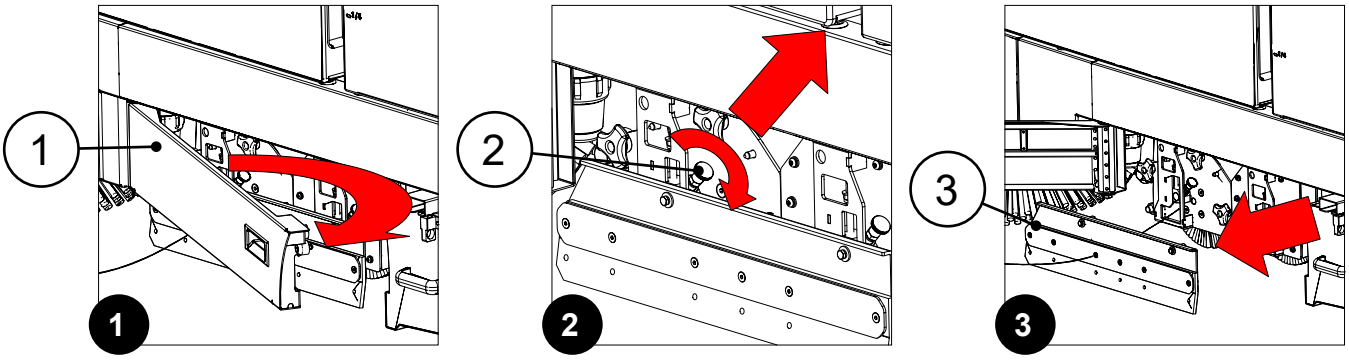

4. Using the appropriate tools, not supplied along with the machine, unscrew the screws (4) securing the rubber blade compression plate (5) to the side splash guard support (3) (**Fig.4**).
5. Remove the rubber blade compression plate (5) and the side splash guard (6) from the side splash guard support (3) (**Fig.5**).
6. Position the new side splash guard on the splash guard support and secure it with the rubber blade compression plate.
7. Secure the rubber blade compression plate in place by tightening the screws previously removed.

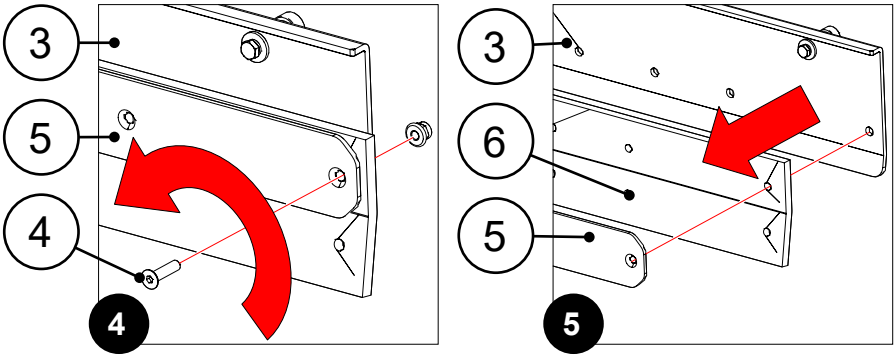

8. Position the left side splash guard (14) in the brush head (**Fig.6**).

ATTENTION: pay particular attention that the fixing pins (18), are correctly positioned in the holes (19) in the support (**Fig.7**).

9. Set the fastening anchors (13) to their working position, turn them a quarter turn anti-clockwise, and move them downwards (**Fig.8**).

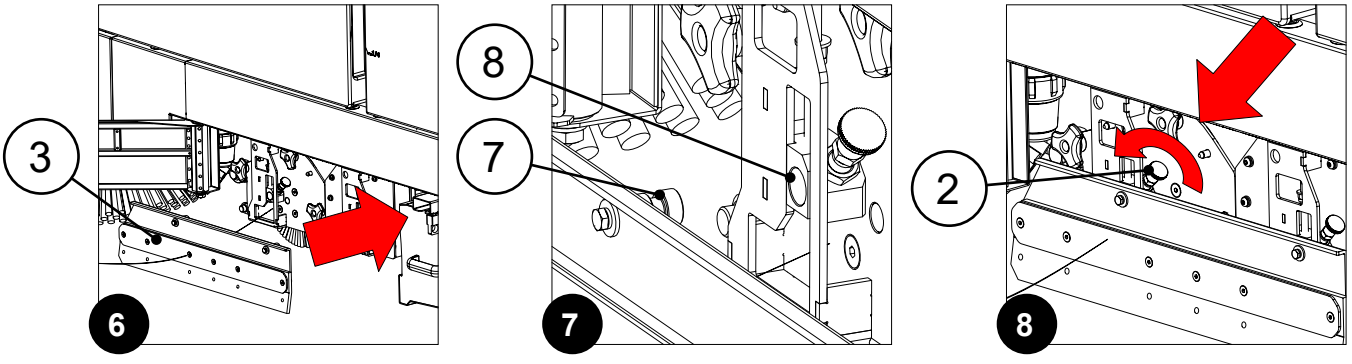

N.B.: check the adjustment of the rubber blades in the squeegee; if necessary, see “ADJUSTMENT OF BRUSH HEAD SIDE SPLASH GUARD (CYLINDRICAL SCRUBBING VERSION)” on page 152.

10. Close the left inspection door.
11. Repeat the operations just carried out for the right lateral splash guard support as well.

REPLACEMENT OF THE SIDE BRUSH (CYLINDRICAL-COMBINED SCRUBBING VERSION)

An intact brush will ensure better floor cleaning, thus decreasing costs while at the same time improving environmental sustainability and performance. To replace the side brush, do the following:

1. Stand on the left front side of the machine.
2. Remove the knob (1) fixing the side brush to the gear motor by rotating the right brush clockwise and the left brush anti-clockwise (**Fig.1**)..
3. Remove the washer (2) holding the side brush in place (**Fig.2**).
4. Replace the worn side brush with a new one, making sure to correctly position the pins (3), present in the brush support, in the holes (4), present in the brush (**Fig.3**).

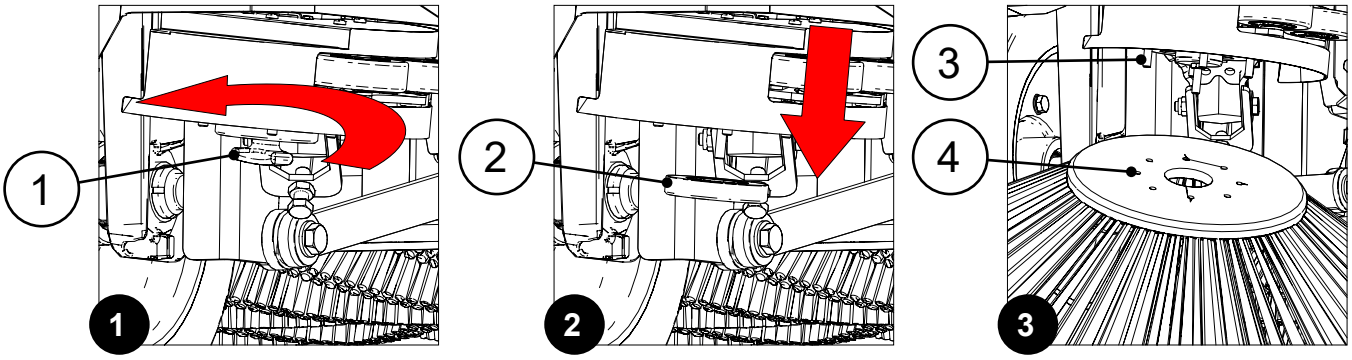

5. Fix the brush to the flange using the knob (1), remembering to put the washer (2) in between the knob and the brush.
6. Once the brush has been fitted, move on to the one on the right.

N.B.: check the adjustment of the side brush, if necessary read “ADJUSTMENT OF THE SIDE BRUSH (CYLINDRICAL SCRUBBING VERSION)” on page 154 or “ADJUSTING THE SIDE BRUSH (COMBINED VERSION)” on page 155.

REPLACING THE SWEEPING BRUSH HEAD BRUSHES (COMBINED VERSION)

Ensuring that the brushes in the brush head are intact will ensure better floor cleaning, thus decreasing costs while at the same time improving environmental sustainability and performance.
To replace the brushes on the brush head, proceed as follows:

CAUTION: it is recommended to wear the appropriate PPE (Personal Protective Equipment), suitable for the work to be carried out.

1. Open the left inspection door (1) (**Fig.1**).
2. Remove the knobs (2) that secure the front brush support (**Fig.2**).
3. Extract the front brush support (3) from the brush head (**Fig.3**).

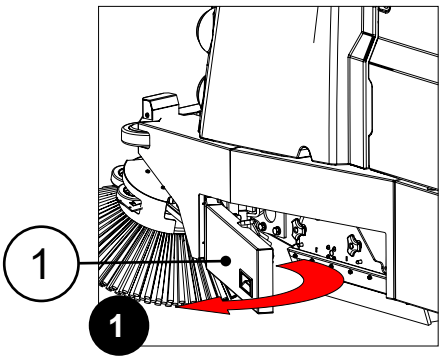

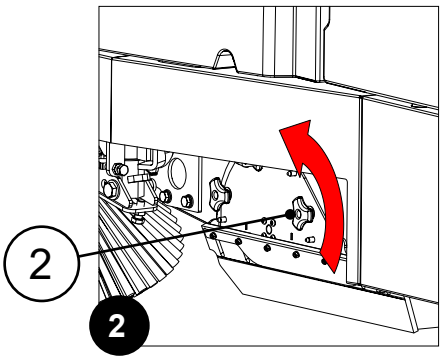

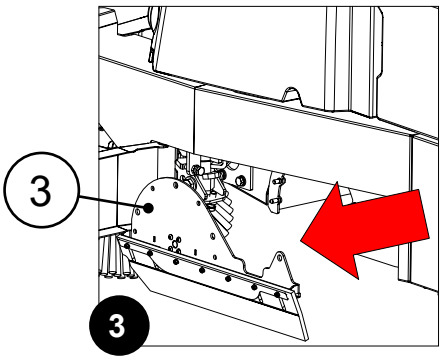

4. Remove the knobs (4) that secure the front brush support (5) (**Fig.4**).
5. Extract the front brush support (5) from the brush head (**Fig.5**).
6. Extract the brush (6) from the brush head body **Fig.6**).

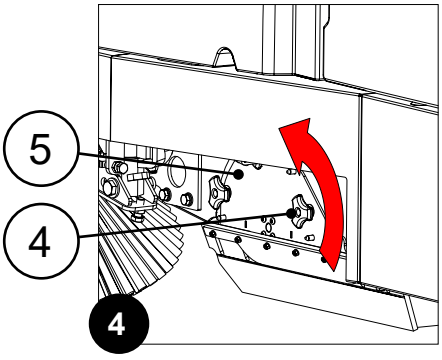

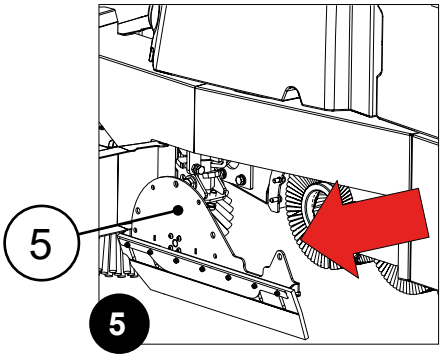

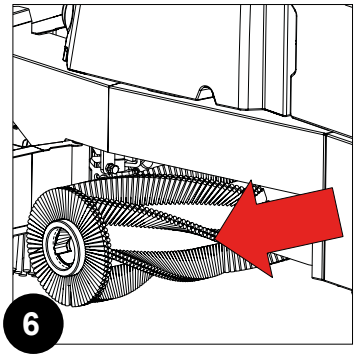

7. Replace the old brush with the new one, see “ASSEMBLY OF BRUSHES (COMBINED VERSION)” on page 58.
8. Insert the new brush into the tow hook on the brush head body (**Fig.7**).
9. Rotate the brush until the fastening hooks (6) present in the tow hook (7) (**Fig. 8**) correctly enter the slots (8) in the brush (**Fig.9**).

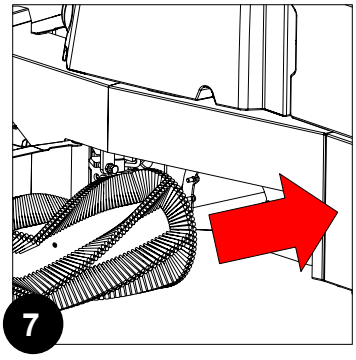

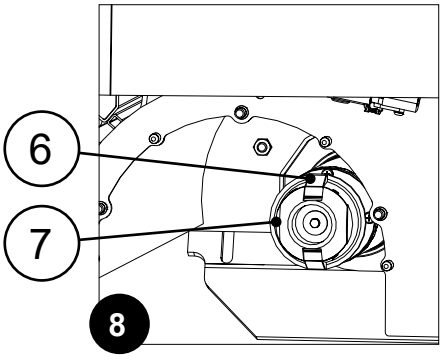

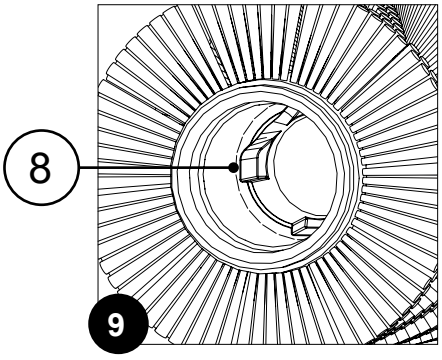

10. Insert the front brush support (5) (**Fig.10**).
11. Rotate the brush until the fastening hooks (9), present in the tow hook (10) fixed to the idle shaft (**Fig. 11**), correctly enter the slots (11) on the brush (**Fig.12**).

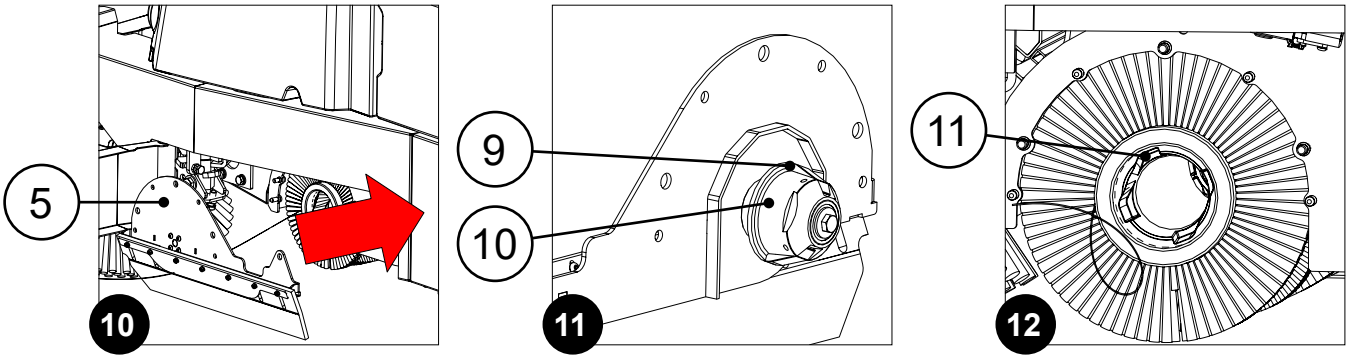

ATTENTION: pay particular attention that the fixing pins (12), present in the brush head body, are correctly positioned in the holes (13) in the front brush support (**Fig.13**).

12. Fix the front brush support (5) to the brush head body using the knobs (4) previously removed (**Fig.14**).
13. Close the left inspection door (1) (**Fig.15**).
14. Repeat the operations just carried out for the right lateral splash guard support as well.

N.B.: in order to be installed correctly, the brushes must form an X when viewed from above in the forward direction of movement.

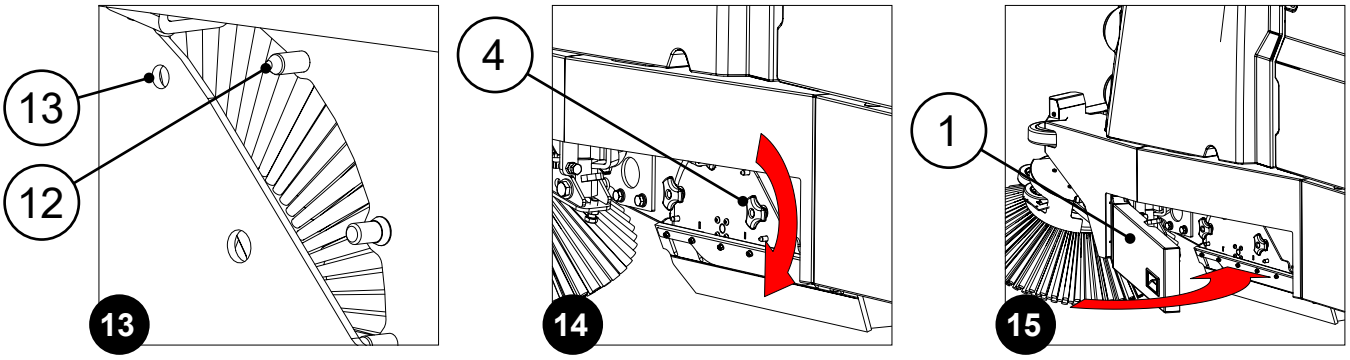

ADJUSTMENT INTERVENTIONS

ADJUSTING THE SQUEEGEE RUBBER BLADES

The precise adjustment of the squeegee rubber blades will ensure better floor cleaning, thus decreasing costs while at the same time improving environmental sustainability and performance.

To regulate the squeegee rubber blades, proceed as follows:

1. Sit on the driver's seat.
2. Insert the key (1) into the slot (2) on the right side of the column (**Fig.1**).
3. Turn on the machine and turn the key (1) a quarter turn clockwise (**Fig.2**).
4. The machine is now operating with the ECO MODE working program, TRANSFER working mode.
5. Set the machine to SCRUBBING mode, see "WORKING MODE" on page 66.
6. Press the drive pedal (3) (**Fig.3**) to begin moving the machine.

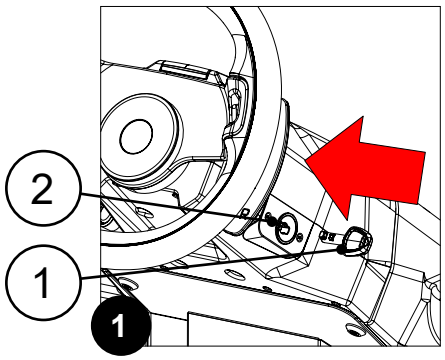

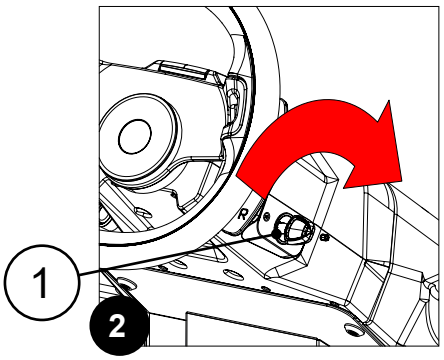

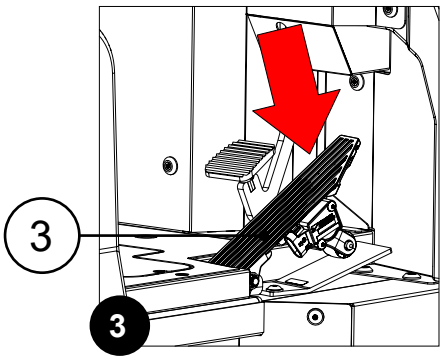

7. Once the brush head and squeegee are in their working positions, set the main switch to its "0" position by turning the key (1) a quarter of a turn anti-clockwise (**Fig.4**).
8. Remove the key from the instrument panel.
9. Get off the machine.

CAUTION: do not position your foot above the side brush head carter while the machine is descending.

10. Grasp the handle (4) and turn the battery compartment carter (5) to its maintenance position (**Fig.5**).

ATTENTION: to prevent the lid from turning, insert the retainer (6) into the slot (7) (**Fig.6**).

ATTENTION: the following operations must be carried out by qualified personnel. Incorrect operations could result in machine malfunctions.

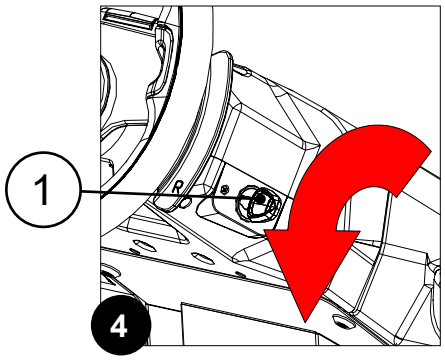

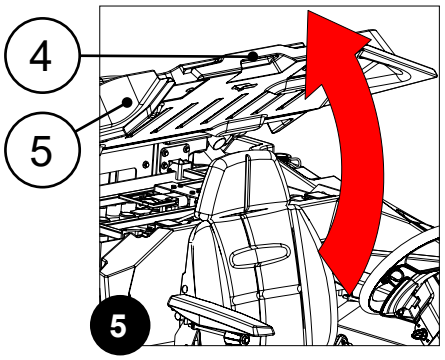

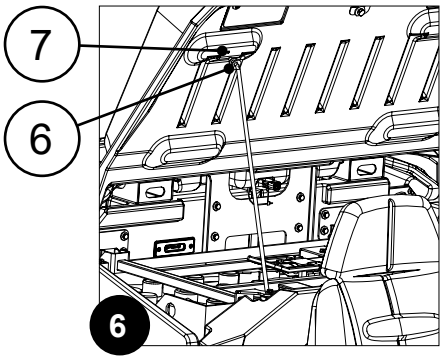

11. Disconnect the machine's electrical system wiring connector (8) from the connector on the power cable coming from the battery box (**Fig. 7**).
12. Grasp the battery compartment lid and turn it to its working position.

N.B.: release the retainer before turning the lid.

CAUTION: it is recommended to wear the appropriate PPE (Personal Protective Equipment), suitable for the work to be carried out.

13. Stand at the back of the machine.
14. Open the inspection footboard (9) (**Fig. 8**), grasp the handle (10), and rotate the footboard towards the outside of the machine.

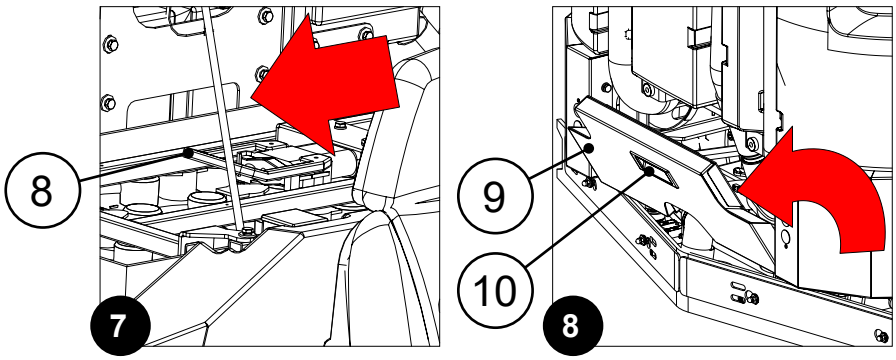

Adjusting the height of the squeegee:

- Release the stopper lever (11) for the squeegee height adjustment knob (12) (**Fig.9**).
- Adjust the height of the rubber blade in relation to the floor by loosening or tightening the knobs (12) (**Fig.10**).

N.B.: Fig.10 indicates the rotation direction for decreasing the distance between the squeegee support and the floor. This distance can be increased by turning it in the opposite direction.

N.B.: By decreasing the distance between the squeegee support and the floor, the rubber blades present in the squeegee move closer to the floor.

N.B.: The right-hand and left-hand knobs must be rotated the same number of times, so that the squeegee is parallel to the floor when it is working.

N.B.: visually check for proper adjustment by looking at the horizontal level gauge (13) on the squeegee (**Fig.11**). To see the horizontal level gauge (13) close the footboard (9) (**Fig.12**).

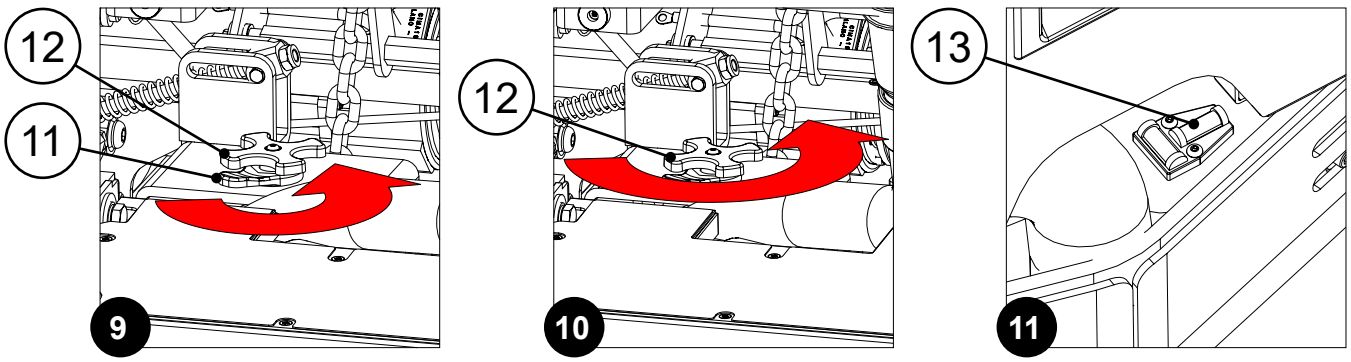

- Once the adjustment has been completed, tighten the retainer lever (11) (**Fig.13**).

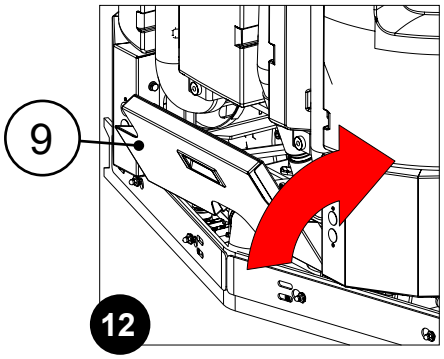

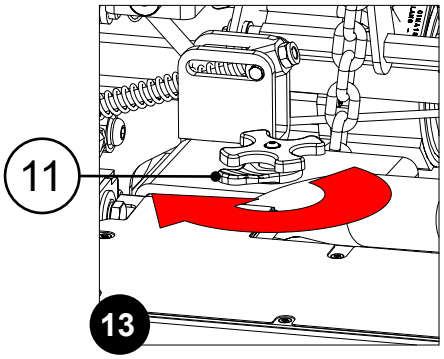

Adjusting the tilt of the squeegee:

- Using the appropriate tools, not included with the machine, loosen the retainer nuts (14) for the squeegee tilt adjustment tie-rod (15) (**Fig.14**).
- To adjust the inclination of the squeegee rubber blades with respect to the floor, tighten or loosen the tie-rod (15) (**Fig.15**) until the squeegee rubber blades are slanted towards the outside evenly along the entire length by about 30° with respect to the floor (**Fig.16**).

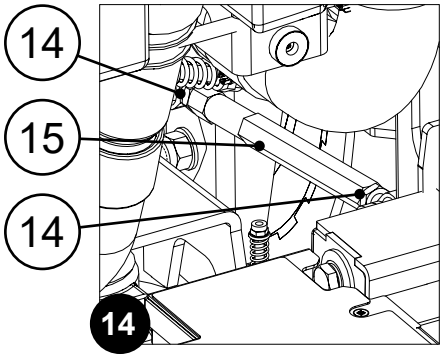

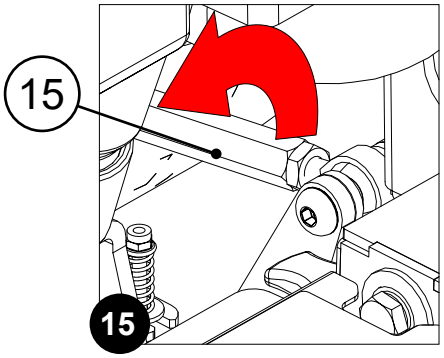

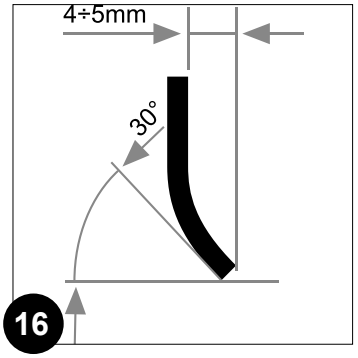

N.B.: Fig.15 indicates the direction of rotation for tilting the squeegee towards the rear of the machine. Turn it in the opposite direction to rotate the squeegee towards the front of the machine.

N.B.: Check that the adjustment is correct by looking at the horizontal bubble gauge (16) on the squeegee (**Fig.17**).

- Once the adjustment has been completed, tighten the retainer nuts (14) (**Fig.14**).

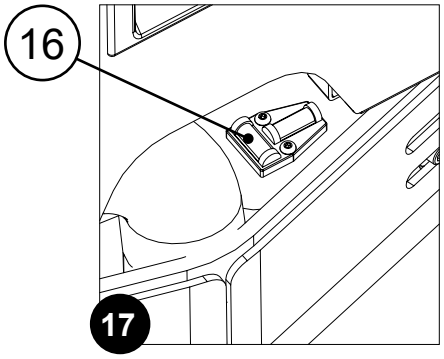

ADJUSTMENT OF BRUSH HEAD SIDE SPLASH GUARD (DISCOID SCRUBBING VERSION)

If the side splash guards of the brush head are not positioned correctly with respect to the floor, they cannot convey the dirty detergent solution towards the squeegee, therefore the height of the splash guard needs to be adjusted.

This operation must be done with the brush head in the work position, proceeding as follows:

1. Sit on the driver's seat.
2. Insert the key (1) into the slot (2) on the right side of the column (**Fig.1**).
3. Turn on the machine and turn the key (1) a quarter turn clockwise (**Fig.2**).
4. The machine is now operating with the ECO MODE working program, TRANSFER working mode.
5. Set the machine to SCRUBBING mode, see "WORKING MODE" on page 66.
6. Press the drive pedal (3) (**Fig.3**) to begin moving the machine.

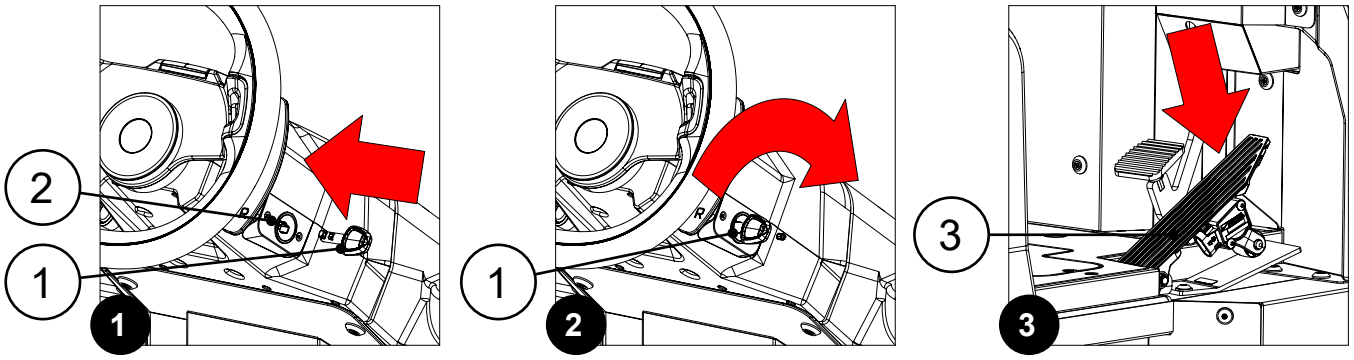

7. Once the brush head and squeegee are in their working positions, set the main switch to its "0" position by turning the key (1) a quarter of a turn anti-clockwise (**Fig.4**).
8. Remove the key from the instrument panel.
9. Get off the machine.

CAUTION: do not position your foot above the side brush head carter while the machine is descending.

10. Grasp the handle (4) and turn the battery compartment carter (5) to its maintenance position (**Fig.5**).

ATTENTION: to prevent the lid from turning, insert the retainer (6) into the slot (7) (**Fig.6**).

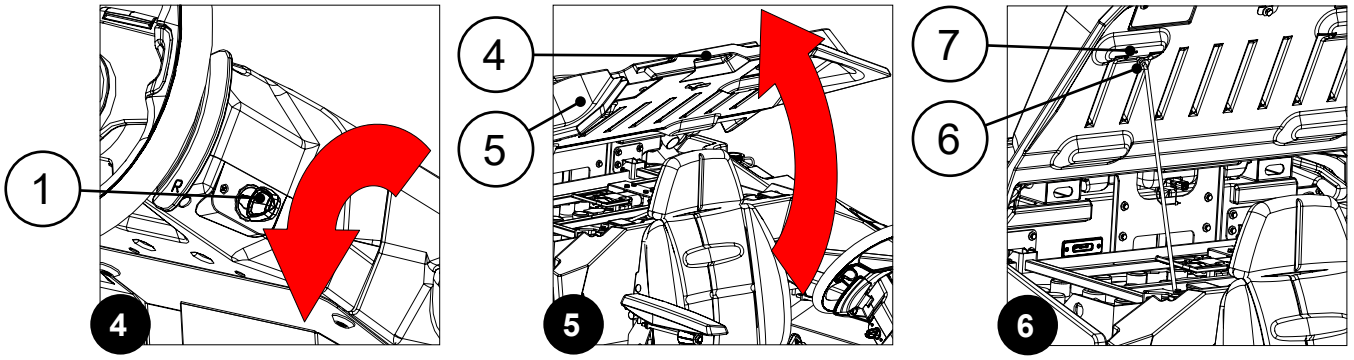

WARNING: the following operations must be carried out by qualified personnel. Incorrect operations could result in machine malfunctions.

11. Disconnect the machine's electrical system wiring connector (8) from the connector on the power cable coming from the battery box (**Fig. 7**).
12. Grasp the battery compartment lid and turn it to its working position.

N.B.: release the retainer before turning the lid.

CAUTION: it is recommended to wear the appropriate PPE (Personal Protective Equipment), suitable for the work to be carried out.

13. Open the left inspection door (9) (**Fig.8**).
14. Using the appropriate tools, not included along with the machine, loosen the retainer nut (10) for the adjustment screw (11) (**Fig.9**).
15. By tightening or loosening the adjustment screw (11), adjust the height of the splash guard in relation to the floor until the splash guard's rubber blade is slanted outwards to the same degree along its entire length, at an angle of about 30° in relation to the floor.

N.B.: Both the front and rear of the splash guard need to be at the same height off the floor.

16. When finished, repeat the operations just carried out for the right lateral splash guard support as well.

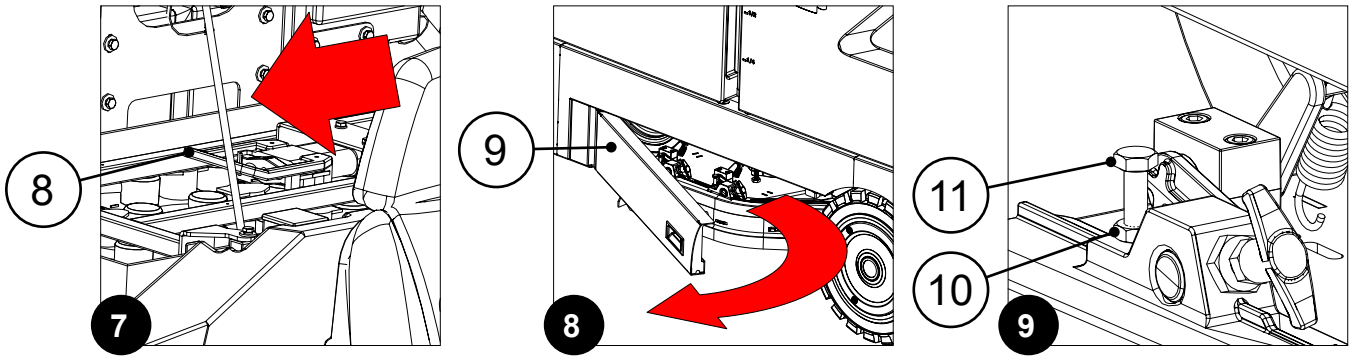

ADJUSTMENT OF BRUSH HEAD SIDE SPLASH GUARD (CYLINDRICAL SCRUBBING VERSION)

If the side splash guards of the brush head are not positioned correctly with respect to the floor, they cannot convey the dirty detergent solution towards the squeegee, therefore the height of the splash guard needs to be adjusted.

This operation must be done with the brush head in the work position, proceeding as follows:

1. Sit on the driver's seat.
2. Insert the key (1) into the slot (2) on the right side of the column (**Fig.1**).
3. Turn on the machine and turn the key (1) a quarter turn clockwise (**Fig.2**).
4. The machine is now operating with the ECO MODE working program, TRANSFER working mode.
5. Set the machine to SCRUBBING mode, see "WORKING MODE" on page 66.
6. Press the drive pedal (3) (**Fig.3**) to begin moving the machine.

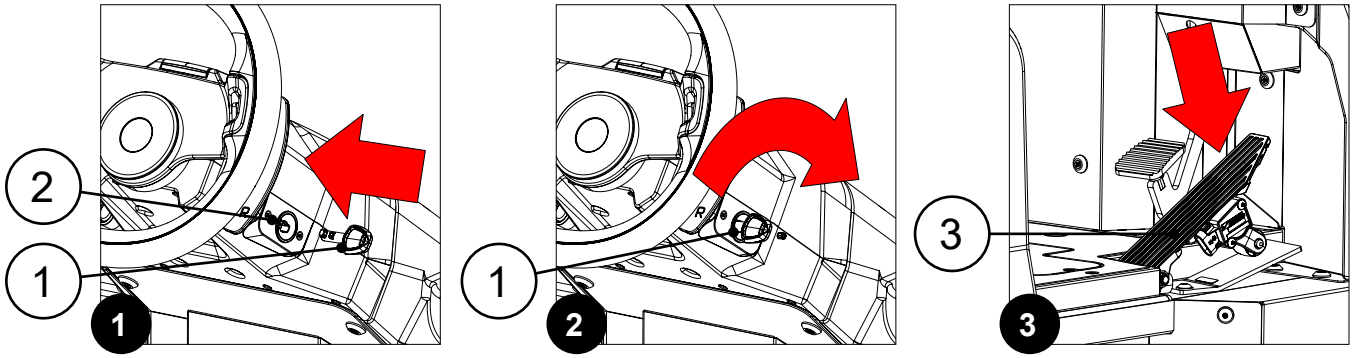

7. Once the brush head and squeegee are in their working positions, set the main switch to its "0" position by turning the key (1) a quarter of a turn anti-clockwise (**Fig.4**).
8. Remove the key from the instrument panel.
9. Get off the machine.

CAUTION: do not position your foot above the side brush head carter while the machine is descending.

10. Grasp the handle (4) and turn the battery compartment carter (5) to its maintenance position (**Fig.5**).

ATTENTION: to prevent the lid from turning, insert the retainer (6) into the slot (7) (**Fig.6**).

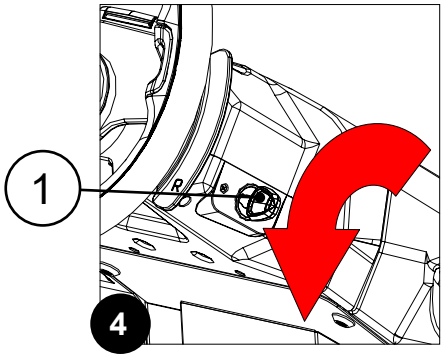

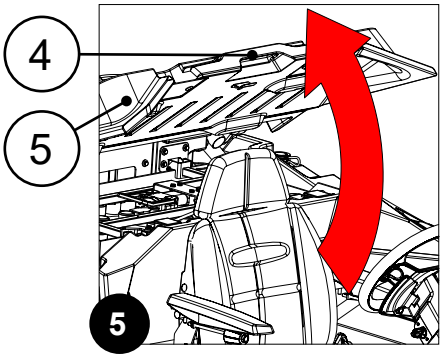

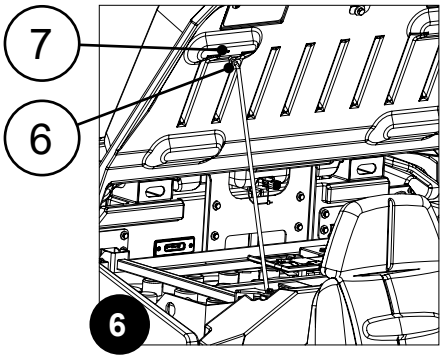

ATTENTION: the following operations must be carried out by qualified personnel. Incorrect operations could result in machine malfunctions.

11. Disconnect the machine's electrical system wiring connector (8) from the connector on the power cable coming from the battery box (**Fig. 7**).
12. Grasp the battery compartment lid and turn it to its working position.

N.B.: release the retainer before turning the lid.

CAUTION: it is recommended to wear the appropriate PPE (Personal Protective Equipment), suitable for the work to be carried out.

13. Open the left inspection door (9) (**Fig.8**).
14. Adjust the height of the splash guard in relation to the floor, screw or unscrew the knob (10) (**Fig. 9**) until the splash guard rubber blade is bent outwards, to the same degree along its entire length, at an angle of around 30° in relation to the floor.

N.B.: Both the front and rear of the splash guard need to be at the same height off the floor.

15. When finished, repeat the operations just carried out for the right lateral splash guard support as well.

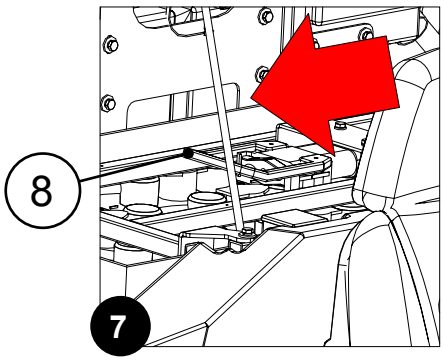

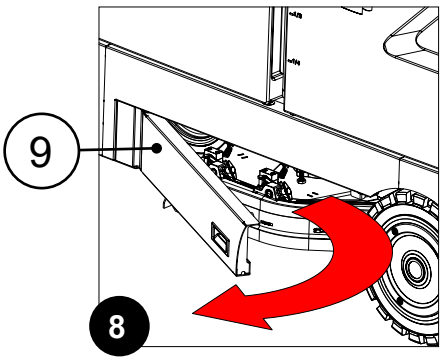

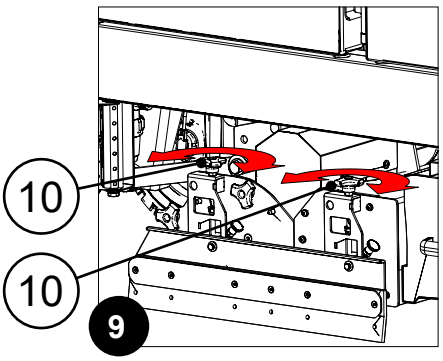

ADJUSTMENT OF THE SIDE BRUSH (CYLINDRICAL SCRUBBING VERSION)

If the side brush is not positioned correctly in relation to the floor, it will not convey the dirt correctly towards the centre of the machine, therefore it is necessary to adjust the vertical angle of the side brush.

This operation must be done with the side brush in the work position, proceeding as follows:

1. Sit on the driver's seat.
2. Insert the key (1) into the slot (2) on the right side of the column (**Fig.1**).
3. Turn on the machine and turn the key (1) a quarter turn clockwise (**Fig.2**).
4. The machine is now operating with the ECO MODE working program, TRANSFER working mode.
5. Set the machine to SCRUBBING mode, see "WORKING MODE" on page 66.
6. Activate the side brushes, see "SIDE BRUSH (CYLINDRICAL SCRUBBING VERSION)" on page 96.
7. Press the drive pedal (3) (**Fig.3**) to begin moving the machine.

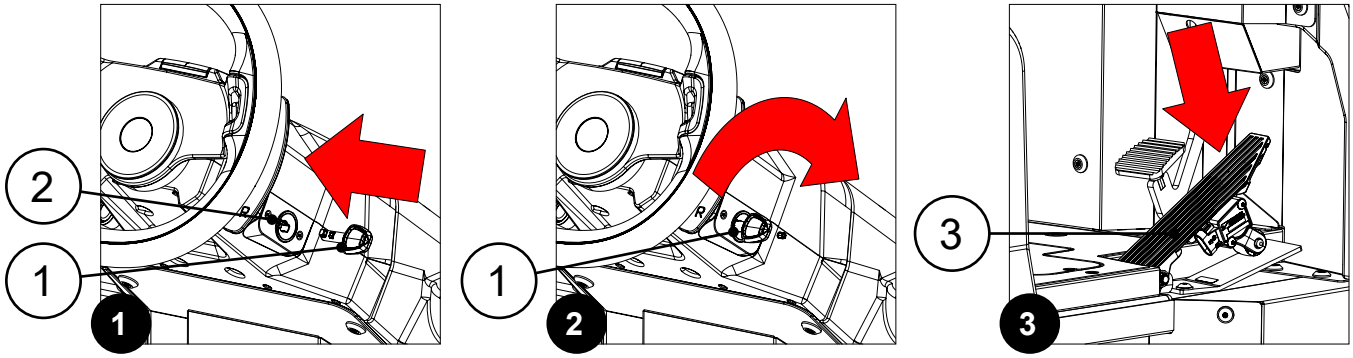

8. Once the brush head and squeegee are in their working positions, set the main switch to its "0" position by turning the key (1) a quarter of a turn anti-clockwise (**Fig.4**).
9. Remove the key from the instrument panel.
10. Get off the machine.

CAUTION: do not position your foot above the side brush head carter while the machine is descending.

11. Grasp the handle (4) and turn the battery compartment carter (5) to its maintenance position (**Fig.5**).

WARNING: to prevent the lid from turning, insert the retainer (6) into the slot (7) (**Fig.6**).

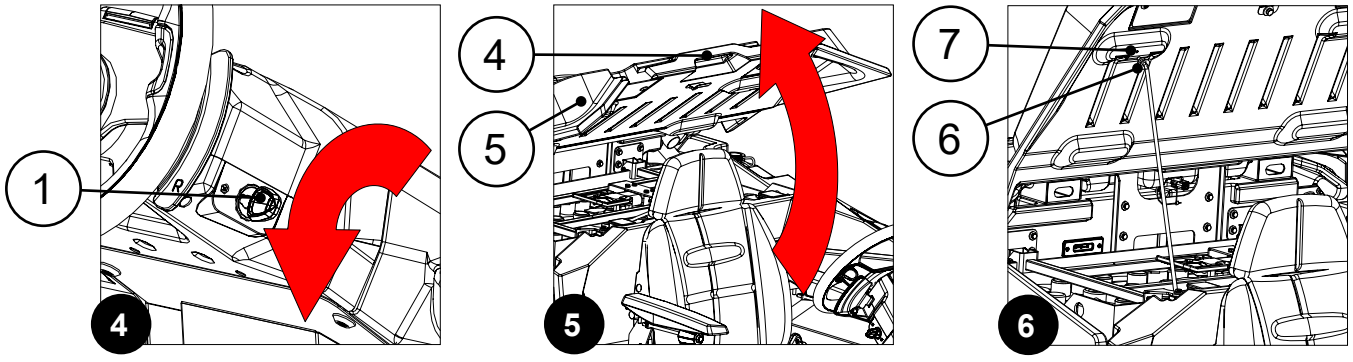

ATTENTION: the following operations must be carried out by qualified personnel. Incorrect operations could result in machine malfunctions.

12. Disconnect the machine's electrical system wiring connector (8) from the connector on the power cable coming from the battery box (**Fig. 7**).

13. Grasp the battery compartment lid and turn it to its working position.

N.B.: release the retainer before turning the lid.

CAUTION: it is recommended to wear the appropriate PPE (Personal Protective Equipment), suitable for the work to be carried out.

14. Go to the front left-hand side of the machine.
15. Using the appropriate tools, not included along with the machine, loosen the retainer nut for the adjustment screw (9) (**Fig.8**).
16. Adjust the angle of the side brush with respect to the floor, screw or unscrew the screw (9) until the bristles of the brush are pressed against the floor by about two centimetres.
17. Once the adjustment is finished, tighten the counter nut and move on to the right side brush.

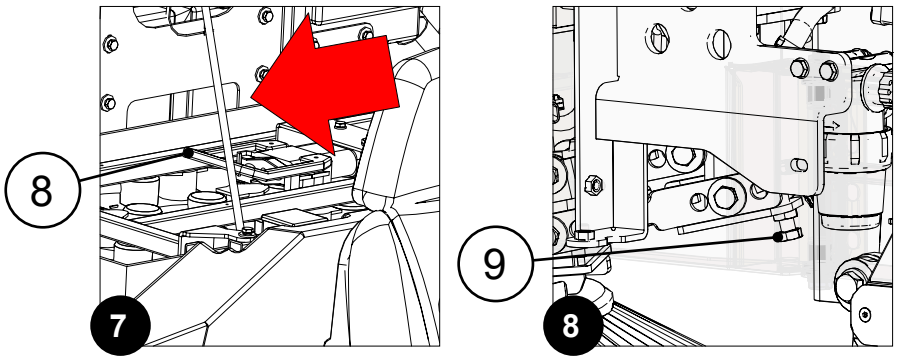

ADJUSTING THE SIDE BRUSH (COMBINED VERSION)

If the side brush is not positioned correctly in relation to the floor, it will not convey the dirt correctly towards the centre of the machine, therefore it is necessary to adjust the vertical angle of the side brush.

This operation must be done with the side brush in the work position, proceeding as follows:

1. Sit on the driver's seat.
2. Insert the key (1) into the slot (2) on the right side of the column (**Fig.1**).
3. Turn on the machine and turn the key (1) a quarter turn clockwise (**Fig.2**).
4. The machine is now operating with the ECO MODE working program, TRANSFER working mode.
5. Set the machine to SWEEPING mode, see "WORKING MODE" on page 66.
6. Activate the side brushes, see "SIDE BRUSH (COMBINED VERSION)" on page 90.
7. Press the drive pedal (3) (**Fig.3**) to begin moving the machine.

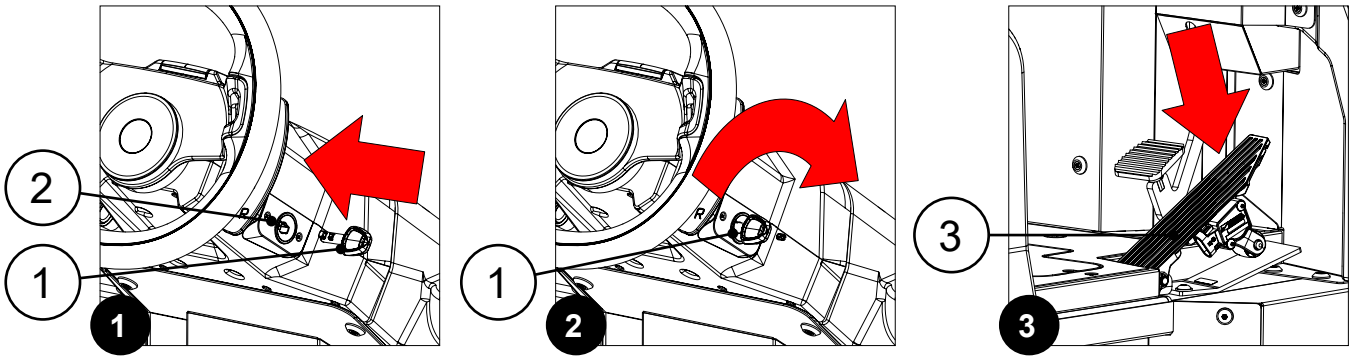

8. Once the sweeping brush head and side squeegee are in their working positions, set the main switch to its "0" position by turning the key (1) a quarter of a turn anti-clockwise (**Fig.4**).
9. Remove the key from the instrument panel.

10. Get off the machine.

CAUTION: do not position your foot above the side brush head carter while the machine is descending.

11. Grasp the handle (4) and turn the battery compartment carter (5) to its maintenance position (**Fig.5**).

ATTENTION: to prevent the lid from turning, insert the retainer (6) into the slot (7) (**Fig.6**).

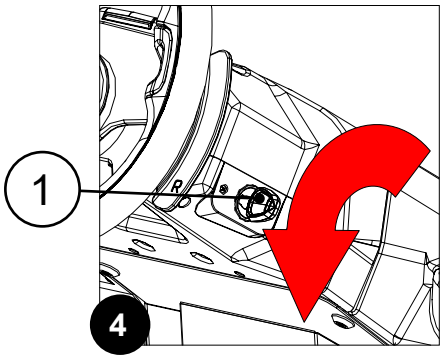

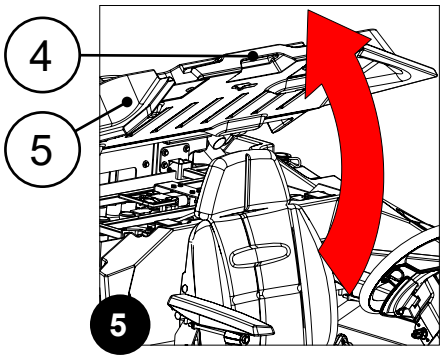

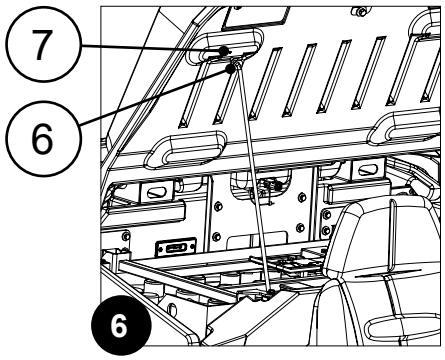

ATTENTION: the following operations must be carried out by qualified personnel. Incorrect operations could result in machine malfunctions.

12. Disconnect the machine's electrical system wiring connector (8) from the connector on the power cable coming from the battery box (**Fig. 7**).
13. Grasp the battery compartment lid and turn it to its working position.

N.B.: release the retainer before turning the lid.

CAUTION: it is recommended to wear the appropriate PPE (Personal Protective Equipment), suitable for the work to be carried out.

14. Go to the front left-hand side of the machine.
15. Open the left inspection door (9) (**Fig.8**).
16. Using the appropriate tools, not included along with the machine, loosen the retainer nut for the adjustment screw (10) (**Fig.9**).
17. Adjust the angle of the side brush with respect to the floor, screw or unscrew the screw (10) until the bristles of the brush are pressed against the floor by about two centimetres.
18. Once the adjustment is finished, tighten the counter nut.
19. Close the left inspection door (9) and repeat the above steps for the right side brush.

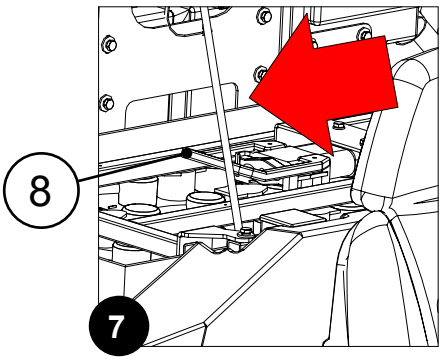

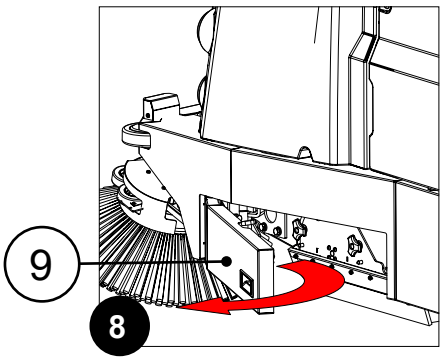

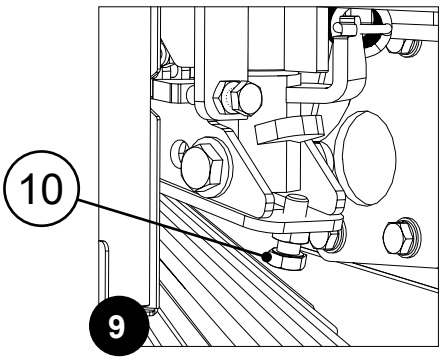

DISPOSAL

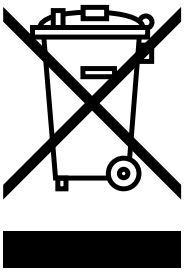

Fimap is committed to creating its products by respecting the environment, investing in the development of sustainable solutions and technologies, seeking materials that can easily be recycled, and ensuring that the entire production process has a low environmental impact.

At the end of the machine's life cycle, the Fimap provides the RECYCLING MANUAL (to be downloaded from the link https://www.fimap.com/it/fimap/ambiente/33/riciclabilita.html) to supply some simple information on the methods for disposing of the materials that make up your scrubbing machine.
Before proceeding with disposal, it is essential to contact your nearest authorised collection centres directly, in accordance with the legislation in force in the country where the machine is used.

CHOOSING AND USING BRUSHES

All the brushes are comprised of a body to which the various tufts of bristles are fixed. The brush bodies are generally made of plastic, as this is a material that ensures higher levels of reliability, in that it does not become damaged when wet.

N.B.: when the bristle starts to be consumed, it comes closer to the brush and increases its rigidity, losing its flexibility characteristics that allows it to collect and remove dirt. For this reason it is important to replace them at the right moment.

The type of brushes for scrubbing machines can be chosen according to the material the bristles are made of; the most common bristle materials are as follows:

POLYPROPYLENE (PPL)	NYLON (PA)	TYNEX
Synthetic polymer	Synthetic polymer	Very durable abrasive material
Bristles with varying level of abrasion and thickness (0.3÷1.5 mm)	Can be used as an alternative to PPL	Can be used for deep cleaning on industrial surfaces
Can be used on any type of flooring		
Can be used for routine or deep cleaning		

UNION MIX	STEEL
Compound based on natural products	Suitable for industrial floors with stubborn dirt
Can be used for polishing and scrubbing activities	Alternative to Tynex
Resistant to very high temperatures	
Subject to rapid wear, shorter life than the PPL version	
Must be used with non-aggressive detergents	
Suitable for flooring types such as: marble; granite; porphyry cobbles; terracotta	
Not suitable for cleaning heavy soiling	

As an alternative to brushes, drive discs can be used. They consist of the rigid brush body without the bristles, which are replaced by pads.

PADS
Ideal for both regular and non-routine cleaning
Perfect for porcelain floors; tuff or microporous surfaces
Ideal for resin floors; cement floors; polishing operations
Not suitable for uneven floors with joints

BRUSHES OR DRIVE DISCS (DISCOID SCRUBBING VERSION)

Legend: $Ø_E$= external bristle diameter; $Ø_F$= external tank diameter (brush body)

CENTRAL BRUSH HEAD BRUSH TYPE

CODE	QTY	Ø EXTERNAL	TYPE OF BRISTLE	Ø BRISTLES	NOTES
405552	2	507 mm	PPL	0,3 mm	DISCOID BRUSH $Ø_E$ 507mm $Ø_F$ 485mm PPL 0.3mm (BLUE)
405553	2	507 mm	PPL	0,6 mm	DISCOID BRUSH $Ø_E$ 507mm $Ø_F$ 485mm PPL 0.6mm (WHITE)
405554	2	507 mm	PPL	0,9 mm	DISCOID BRUSH $Ø_E$ 507mm $Ø_F$ 485mm PPL 0.9mm (BLACK)
455600	2	507 mm	PPL	1,2 mm	DISCOID BRUSH $Ø_E$ 507mm $Ø_F$ 485mm PPL 1.2mm (BLACK)
405555	2	507 mm	TYNEX	1 mm	DISCOID BRUSH $Ø_E$ 507mm $Ø_F$ 485mm
405556	2	507 mm	NYLON	0,9 mm	DISCOID BRUSH $Ø_E$ 507mm $Ø_F$ 485mm
456306	2	507 mm	ABRASIVE	1,2 mm	DISCOID BRUSH $Ø_E$ 507mm $Ø_F$ 485mm
456307	2	505 mm			PAD HOLDER WITH CENTER LOCK



Disc brush



Pad holder

SIDE BRUSH HEAD BRUSH TYPE

CODE	QTY	Ø EXTERNAL	TYPE OF BRISTLE	Ø BRISTLES	NOTES
456466	1	355 mm	PPL	0,6 mm	DISCOID BRUSH $Ø_E$ 355mm $Ø_F$ 340mm PPL 0.6mm (WHITE)
456309	1	355 mm	PPL	0,9 mm	DISCOID BRUSH $Ø_E$ 355mm $Ø_F$ 340mm PPL 0.9mm (BLACK)
456310	1	355 mm	ABRASIVE	1 mm	DISCOID BRUSH $Ø_E$ 355mm $Ø_F$ 340mm ABRASIVE 1mm (GREY)
456311	1	340 mm			PAD HOLDER WITH CENTER LOCK

BRUSHES OR DRIVE DISCS (CYLINDRICAL SCRUBBING VERSION)

Legend: $Ø_E$= external bristle diameter; $Ø_F$= external tank diameter (brush body); L_E= maximum brush width (bristle reference); L_F= maximum brush width (tank reference);

CENTRAL BRUSH HEAD BRUSH TYPE

CODE	QTY	Ø EXTERNAL	TYPE OF BRISTLE	Ø BRISTLES	NOTES
456053	2	320	PPL	1	CYLINDRICAL BRUSH $Ø_E$ 320mm $Ø_F$ 115mm L_E 940mm L_F 973mm (BLACK)
456054	2	320	PPL	0,7	CYLINDRICAL BRUSH $Ø_E$ 320mm $Ø_F$ 115mm L_E 940mm L_F 973mm (WHITE)
456055	2	320	ABRASIVE	1.4	CYLINDRICAL BRUSH $Ø_E$ 320mm $Ø_F$ 115mm L_E 940mm L_F 973mm (GREY)
456527	2	320	PPL	1,2	CYLINDRICAL BRUSH $Ø_E$ 320mm $Ø_F$ 115mm L_E 940mm L_F 973mm (WHITE)
456528	2	320	PPL	1.5	CYLINDRICAL BRUSH $Ø_E$ 320mm $Ø_F$ 115mm L_E 940mm L_F 973mm (GREEN)



Cylindrical brush



Disc brush (side)

SIDE BRUSH HEAD BRUSH TYPE

CODE	QTY	Ø EXTERNAL	TYPE OF BRISTLE	Ø BRISTLES	NOTES
456550	2	550	PPL	1.5	DISCOID BRUSH $Ø_E$ 550mm $Ø_F$ 250mm (WHITE)
456551	2	550	PPL + STEEL	1,1 + 0,7	DISCOID BRUSH $Ø_E$ 550mm $Ø_F$ 250mm (BLACK + STEEL FILAMENTS)
456552	2	550	PPL	1	DISCOID BRUSH $Ø_E$ 550mm $Ø_F$ 250mm (BLACK)

BRUSHES OR DRIVE DISCS (COMBINED VERSION)

Legend: $Ø_E$= external bristle diameter; $Ø_F$= external tank diameter (brush body); L_E= maximum brush width (bristle reference); L_F= maximum brush width (tank reference);

CENTRAL BRUSH HEAD BRUSH TYPE

CODE	QTY	Ø EXTERNAL	TYPE OF BRISTLE	Ø BRISTLES	NOTES
456654	2	240	PPL	0,3 + 0,7	CYLINDRICAL BRUSH $Ø_E$ 240mm $Ø_F$ 115mm L_E 810mm L_F 838mm (FRONT ROW, BLUE; REAR ROW, WAVY WHITE)
456140	2	240	PPL	0,7 + 1	CYLINDRICAL BRUSH $Ø_E$ 240mm $Ø_F$ 115mm L_E 810mm L_F 838mm (FRONT ROW WAVY WHITE; REAR ROW, MILLED BLACK)
456655	2	240	PPL + STEEL	0,7 + 0,5	CYLINDRICAL BRUSH $Ø_E$ 240mm $Ø_F$ 115mm L_E 810mm L_F 838mm (FRONT ROW WAVY WHITE; REAR ROW STEEL)



Cylindrical brush



Disc brush (side)

SIDE BRUSH HEAD BRUSH TYPE

CODE	QTY	Ø EXTERNAL	TYPE OF BRISTLE	Ø BRISTLES	NOTES
456550	2	550	PPL	1.5	DISCOID BRUSH $Ø_E$ 550mm $Ø_F$ 250mm (WHITE)
456551	2	550	PPL + STEEL	1,1 + 0,7	DISCOID BRUSH $Ø_E$ 550mm $Ø_F$ 250mm (BLACK + STEEL FILAMENTS)
456552	2	550	PPL	1	DISCOID BRUSH $Ø_E$ 550mm $Ø_F$ 250mm (BLACK)

TROUBLESHOOTING

This chapter lists the most common problems linked with the use of the machine. If you are unable to resolve the problems with the information given here, please contact your FIMAP service centre of reference, or that which is closest to you

THE MACHINE DOES NOT START

POSSIBLE CAUSE	SOLUTION
The main switch is set to “0”.	Make sure that the main switch is in its "I" position, otherwise turn the key a quarter turn clockwise.
Check that when switched on there are no alarm messages on the command display.	Contact your FIMAP service centre of reference, or that which is closest to you.
Make sure the battery box is correctly connected and that the battery box connector is connected to the electrical system connector.	Make sure the batteries are properly connected to one another, contact your FIMAP service centre of reference, or that which is closest to you.
	Make sure the batteries are properly connected to the machine's electrical system, contact your FIMAP service centre of reference, or that which is closest to you.
Check the charge level of the battery box.	If the battery box charge level is critical, perform a complete charging cycle, see “RECHARGING THE BATTERY BOX” on page 43).

THE BATTERY BOX IS NOT COMPLETELY CHARGED

POSSIBLE CAUSE	SOLUTION
The battery charger cable connector is not properly inserted into the battery box connector.	Connect the battery charger cable connector to the battery box connector again.
The plug on the battery charger's power cable is not correctly inserted into the electrical outlet.	Check that the battery charger power supply cable plug is connected to the mains socket.
The characteristics of the mains power supply do not correspond to those required by the battery charger.	Check that the characteristics in the battery charger plate are the same as those of the mains supply.
The LEDs of the battery charger blink repeatedly.	Referring to the battery charger use and maintenance manual, check the meaning of the flashing signals that the battery charger emits dung the battery recharge stage.
The electrolyte level in the battery box cells is low.	See the battery box user and maintenance manual to perform a top up. This document is supplied along with the battery box itself, or else can be obtained by contacting the battery box supplier.

THE MACHINE HAS A VERY LOW WORK AUTONOMY

POSSIBLE CAUSE	SOLUTION
Check the battery box charge level (check the symbol on the control display).	If the battery charge level is critical, perform a complete charging cycle, see “RECHARGING THE BATTERY BOX” on page 43).

THE MACHINE DOES NOT MOVE

POSSIBLE CAUSE	SOLUTION
The machine does not start.	See “THE MACHINE DOES NOT START” on page 162.
An error appears on the control display.	See “ALARM SCREEN” on page 87.
There is an issue on the drive pedal.	Contact your FIMAP service centre of reference, or that which is closest to you

INSUFFICIENT DETERGENT SOLUTION ON THE BRUSHES

POSSIBLE CAUSE	SOLUTION
The quantity of detergent solution in the water system is not sufficient for the work to be carried out.	Check that the amount of detergent solution present in the machine's water system is sufficient for the work to be carried out. If it is insufficient, see “DETERGENT SOLUTION” on page 47.
The amount of detergent solution delivered to the brushes is insufficient for the work that needs to be carried out.	Check that the amount of detergent solution delivered to the brushes is sufficient for the work to be carried out. If it is insufficient, see “ADJUSTMENT OF THE DETERGENT SOLUTION FLOW” on page 83.
	For the scrubbing versions, check that the delivery tube in the brush gearmotor is not blocked, if necessary, remove the blockage.
	For the scrubbing versions with side brush, check that the delivery tube in the brush gearmotor is not blocked, if necessary, remove the blockage.
	For the cylindrical scrubbing versions, check that the delivery tube in the front part of the brush head body is not blocked, if necessary, remove the blockage.
Detergent solution filter obstructed.	Check the detergent solution filter is not obstructed, otherwise clean it, see “CLEANING THE WATER SYSTEM FILTER” on page 118.
	Make sure that the automatic chemical detergent management system filter is not obstructed, otherwise clean it, see “CLEANING THE FILTER ON THE AUTOMATIC CHEMICAL DETERGENT MANAGEMENT SYSTEM (FSS VERSION)” on page 119.
	Make sure that the detergent solution recycling system filter is not obstructed, otherwise clean it, see “CLEANING THE FILTER ON THE DETERGENT SOLUTION RECYCLING SYSTEM (FLR VERSION)” on page 120.

THE MACHINE DOES NOT CLEAN CORRECTLY

POSSIBLE CAUSE	SOLUTION
The machine does not start.	See “THE MACHINE DOES NOT START” on page 162.
Not enough detergent solution comes out.	See “INSUFFICIENT DETERGENT SOLUTION ON THE BRUSHES” on page 163.
The amount of detergent present in the water system of the machine is not sufficient for the work to be carried out.	For machine versions without the automatic chemical product management system, check the table in the detergent canister to verify the correct quantity to be introduced in the solution tank.
	For machine versions with the automatic chemical product management system, check the percentage of detergent selected for the work that you wish to carry out. To adjust, see “MODIFICARE LA PERCENTUALE DI PRODOTTO CHIMICO NELLA SOLUZIONE DETERGENTE” on page 13 of the "OPERATOR INTERFACE CONFIGURATION MANUAL" delivered with the machine documentation.
The brushes or drive discs being used are not properly inserted into the machine.	Check that the brushes are correctly inserted in the machine, if necessary see “ASSEMBLY OF BRUSHES OR DRIVE DISCS (DISCOID SCRUBBING VERSION)” on page 50.
	Check that the brush in the side brush head is properly inserted into the machine, if necessary see “ASSEMBLY OF THE SIDE BRUSH HEAD BRUSH OR DRIVE DISCS (DISCOID SCRUBBING VERSION)” on page 54.
	Check that the brushes in the brush head are correctly inserted in the machine, if necessary see “FITTING OF BRUSHES (CYLINDRICAL SCRUBBING VERSION)” on page 55.
	Check that the brush in the brush head is properly inserted into the machine, if necessary see “ASSEMBLY OF THE SIDE BRUSHES (CYLINDRICAL - COMBINED SCRUBBING VERSION)” on page 57.
	Check that the brushes in the brush head are correctly inserted in the machine, if necessary see “ASSEMBLY OF BRUSHES (COMBINED VERSION)” on page 58.
The type of brush used is not suitable for the dirt to be cleaned.	Check that the brushes installed on the machine are adequate for the work to be carried out, contact your FIMAP service centre of reference, or that which is closest to you

POSSIBLE CAUSE	SOLUTION
The brush bristles are excessively worn.	Check the state of wear of the brushes in the brush head and replace them if necessary, see “REPLACEMENT OF BRUSH HEAD DRIVE BRUSHES OR DISCS (DISCOID SCRUBBING VERSION)” on page 138.
	Check the state of wear of the brush in the side brush head and replace it if necessary, see “REPLACEMENT OF SIDE BRUSH HEAD DRIVE BRUSH OR DISCS (DISCOID SCRUBBING VERSION)” on page 140.
	Check the state of wear of the brushes in the brush head and replace them if necessary, see “REPLACING THE BRUSH HEAD BRUSHES (CYLINDRICAL SCRUBBING VERSION)” on page 143.
	Check the state of wear of the brush in the side brush head and replace it if necessary, see “REPLACEMENT OF THE SIDE BRUSH (CYLINDRICAL-COMBINED SCRUBBING VERSION)” on page 145.
	Check the state of wear of the brushes in the brush head and replace them if necessary, see “REPLACING THE SWEEPING BRUSH HEAD BRUSHES (COMBINED VERSION)” on page 146.
The debris hopper is too full (cylindrical scrubbing version)	If the debris hopper is too full, empty it. See “EMPTYING THE DEBRIS HOPPER (CYLINDRICAL VERSION)” on page 80.
The debris hopper is too full (combined version)	If the debris hopper is too full, empty it. See “EMPTYING THE DEBRIS HOPPER (COMBINED VERSION)” on page 81.

THE SQUEEGEE DOES NOT DRY CORRECTLY

POSSIBLE CAUSE	SOLUTION
The vacuum unit is obstructed.	Make sure the squeegee is free of obstructions, see “CLEANING THE SQUEEGEE” on page 111.
	Check that the squeegee in the side brush is free from obstructions, if necessary see “CLEANING OF SIDE BRUSH HEAD SQUEEGEE (DISCOID SCRUBBING VERSION)” on page 125.
	Make sure the vacuum tube is free of obstructions, see “CLEANING THE SQUEEGEE VACUUM HOSE” on page 112.
	Check that the collection filter tray is free of obstructions, see “CLEANING THE COLLECTION FILTER TRAY” on page 114.
	Check that the wave protection tray is free of obstructions, see “CLEANING THE WAVE PROTECTION TRAY” on page 115.
	Check that the vacuum tube in the debris hopper is free from obstructions; if necessary see “EMPTYING THE DEBRIS HOPPER (CYLINDRICAL VERSION)” on page 80.
The rubber blades of the splash guard are dirty.	Check if the splash guards on the brush head are clean, see “CLEANING OF BRUSH HEAD SIDE SPLASH GUARD (DISCOID SCRUBBING VERSION)” on page 123.
	Check that the splash guard in the side brush head is clean, see “CLEANING OF SIDE BRUSH HEAD SPLASH GUARD (DISCOID SCRUBBING VERSION)” on page 124.
	Check if the splash guards on the brush head are clean, see “CLEANING OF BRUSH HEAD SIDE SPLASH GUARD (CYLINDRICAL SCRUBBING VERSION)” on page 127.
The squeegee rubber blades are dirty.	Check that the squeegee rubber blades are clean, see “CLEANING THE SQUEEGEE” on page 111.
	Check that the squeegee rubber blades in the side brush head are clean, see “CLEANING OF SIDE BRUSH HEAD SQUEEGEE (DISCOID SCRUBBING VERSION)” on page 125
The cap on the recovery tank drainage tube is not properly positioned.	Check that the cap on the recovery tank drainage tube is positioned properly.
The recovery tank lid is not positioned correctly.	Check that the recovery tank lid is properly positioned on the machine.

EXCESSIVE FOAM PRODUCTION

POSSIBLE CAUSE	SOLUTION
The detergent being used is not suitable.	Check that a low foam detergent has been used. If necessary, add a small quantity of anti-foam liquid to the recovery tank.
The floor is not very dirty.	Dilute the detergent more.

THE MACHINE DOES NOT VACUUM CORRECTLY

POSSIBLE CAUSE	SOLUTION
The recovery tank is full.	Empty the recovery tank, see “DRAINING THE RECOVERY TANK” on page 116.
The vacuum device is obstructed	See “THE SQUEEGEE DOES NOT DRY CORRECTLY” on page 166.

EXCESSIVE DUST PRODUCTION (COMBINED VERSION)

POSSIBLE CAUSE	SOLUTION
Vacuum system disabled.	Check that the vacuum system of the debris hopper is not switched off; if it is, switch it on by pressing the button on the control display, see “SWEEPING WORKING MODE (COMBINED VERSION)” on page 73.
Clogged vacuum filter.	Check that the filter in the vacuum system is not clogged by dirt and clean if necessary; see “CLEANING THE DEBRIS HOPPER VACUUM FILTER (COMBINED VERSION)” on page 131.
The debris hopper is too full	Check that the debris hopper is not full; if necessary, empty it. See “EMPTYING THE DEBRIS HOPPER (COMBINED VERSION)” on page 81.
Dust seal flaps no longer in good condition	Contact your FIMAP service centre of reference, or that which is closest to you.

EC DECLARATION OF CONFORMITY

The undersigned manufacturer:

FIMAP S.p.A.
Via Invalidi del Lavoro, 1
37059 Santa Maria di Zevio (VR)

declares under its sole responsibility that the products

FLOOR SCRUBBING MACHINES

mod. GMG B PRO; GMG BS PRO

comply with the requirements of the following Directives:

- 2006/42/EC: Machinery Directive.
- 2014/30/EU: Electromagnetic compatibility directive.

The person authorized to compile the technical file:

Mr. Giancarlo Ruffo
Via Invalidi del Lavoro, 1
37059 Santa Maria di Zevio (VR) - ITALY

Santa Maria di Zevio (VR), 18/03/2022

FIMAP S.p.A.
Legal representative
Giancarlo Ruffo

The undersigned manufacturer:

FIMAP S.p.A.
Via Invalidi del Lavoro, 1
37059 Santa Maria di Zevio (VR)

declares under its sole responsibility that the products

SWEEPING MACHINES

model GMG BC PRO

comply with the requirements of the following Directives:

- 2006/42/EC: Machinery Directive.
- 2014/30/EU: Electromagnetic compatibility directive.
- 2000/14/EC: Directive by the European Parliament and Council date 8th May, 2000. Noise emission by machines and equipment for outdoor use.

MODEL	LwA [dB(A)]	LwA guaranteed [dB(A)]
GMG BC PRO	92,2	92,2

The person authorized to compile the technical file:

Mr. Giancarlo Ruffo
Via Invalidi del Lavoro, 1
37059 Santa Maria di Zevio (VR) - ITALY

Santa Maria di Zevio (VR), 18/03/2022

FIMAP S.p.A.
Legal representative
Giancarlo Ruffo

UKCA DECLARATION OF CONFORMITY

The undersigned manufacturer:

FIMAP S.p.A.
Via Invalidi del Lavoro, 1
37059 Santa Maria di Zevio (VR)

declares under its sole responsibility that the products

FLOOR SCRUBBING MACHINES

mod. GMG B PRO; GMG BS PRO

comply with the requirements of the following Directives:

- S.I. 2008/1597 Supply of Machinery (Safety) Regulations 2008 (as amended).
- S.I. 2016:1091 Electromagnetic Compatibility Regulations 2016 (as amended).

The person authorized to compile the technical file:

Mr. Giancarlo Ruffo
Via Invalidi del Lavoro, 1
37059 Santa Maria di Zevio (VR) - ITALY

Santa Maria di Zevio (VR), 18/03/2022

FIMAP S.p.A.
Legal representative
Giancarlo Ruffo

The undersigned manufacturer:

FIMAP S.p.A.
Via Invalidi del Lavoro, 1
37059 Santa Maria di Zevio (VR)

declares under its sole responsibility that the products

SWEEPING MACHINES

model GMG BC PRO

comply with the requirements of the following Directives:

- S.I. 2008/1597 Supply of Machinery (Safety) Regulations 2008 (as amended).
- S.I. 2016:1091 Electromagnetic Compatibility Regulations 2016 (as amended).
- S.I. 2001:1701 Noise Emission in the Environment by Equipment for use Outdoors Regulations 2001 (as amended).

MODEL	LwA [dB(A)]	LwA guaranteed [dB(A)]
GMG BC PRO	92,2	92,2

The person authorized to compile the technical file:

Mr. Giancarlo Ruffo
Via Invalidi del Lavoro, 1
37059 Santa Maria di Zevio (VR) - ITALY

Santa Maria di Zevio (VR), 18/03/2022

FIMAP S.p.A.
Legal representative
Giancarlo Ruffo